ProtoDUNE/SBND Electronics Test Stand Plans
7.19.2016
L. Bagby, T. Shaw

Project Scope:

Establish a noise free environment to conduct engineering studies on SBND and ProtoDUNE electronics and perform R&D measurements on the effect of utilizing 'isolated' grounding schemes on the noise level of LAr cold electronics in combination with an attached APA frame.

In addition to verifying the proper operation of the LAr cold electronics, the shielded room will provide a test bed for future studies.

Initial Setup (August):

Shielded room

Measure integrity of shielded room at F0. Note any deficiencies to be repaired. While disassembling room, take pictures of key connection areas, take measurements to produce mechanical drawing. Generate notes on disassembly process. Generate drawing of room with pictures of process to aid in reassembly process. Disassemble room and reassemble at DAB. Generate notes on assembly process.

AC Power Distribution

Remove double shielded transformer, saturable inductor, Impedance Monitor, and Disconnect Box, and power panel from PC4. (Requires electrician time.) Install equipment at DAB. Arrange for AC power service from building power with electrician (Dave Featherston).

Phase 0 (August/September)

Goals:

Set up minimal equipment to understand how to communicate and operate a SBND style Motherboard with engineering software.

Location: Bench top (WH14) Rachel

Equipment list:

SBND Motherboard/Mezzanine with FE ASIC and V*ADC (BNL)
Power Supply (Fermi)
SBND Cables (BNL)
Stand Alone Readout
- ArriaV Starter Kit $850 (Fermi purchase)
- Cable Adapter board (BNL)
- Linux machine w/C++ (Geoff Savage)

Test to be completed:

1. Configure ASICs.
2. Measure response for all gain and shaping functions.
3. Test pulse run.
4. Compare response with BNL

Phase 1 (September/October)

Goals:

1. Establish an environment to perform noise study measurements on BNL cold electronics attached to the "4-board" APA from 35-ton. (Disassemble and reassemble shielded room from AD/F0 to DAB. Mechanical support required.)
2. Establish a versatile AC power source configuration to measure the effect of various AC Distribution systems on the noise level of the APA and cold electronics.

Location: DAB Sidewalk

Test Stand graphic:

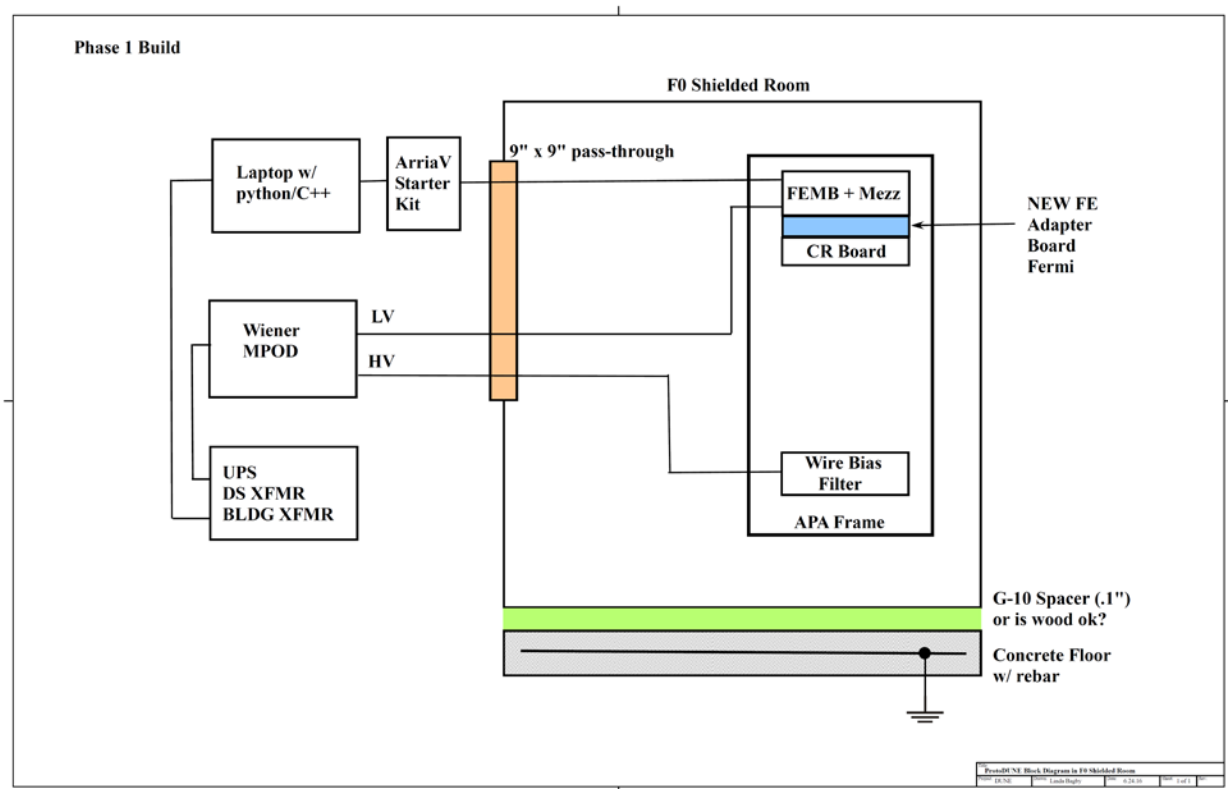

Equipment:

FE Adapter Board (Fermi: D. Huffman)
CR Board
35-ton 4-board APA
AD Shielded Room currently located at F0.
Wiener MPOD
UPS
Double Shielded 'isolation' transformer (Fermi)
Impedance Monitor
Services from DAB building transformer
Flange interface (Fermi: D. Huffman)

Test:

1. Configure ASICs, measure gain, shaping function response, test pulse (linearity) and noise pedestal for 3 AC power sources with FEMB + Mezz only.
2. Add CR + APA connection, same measurements as above.
3. Compare data with BNL data.

Phase 2 (October/November)

Goals:

1. Integrate SBND type WIB + WIB Adapter.

Location: DAB Sidewalk

Test Stand graphic:

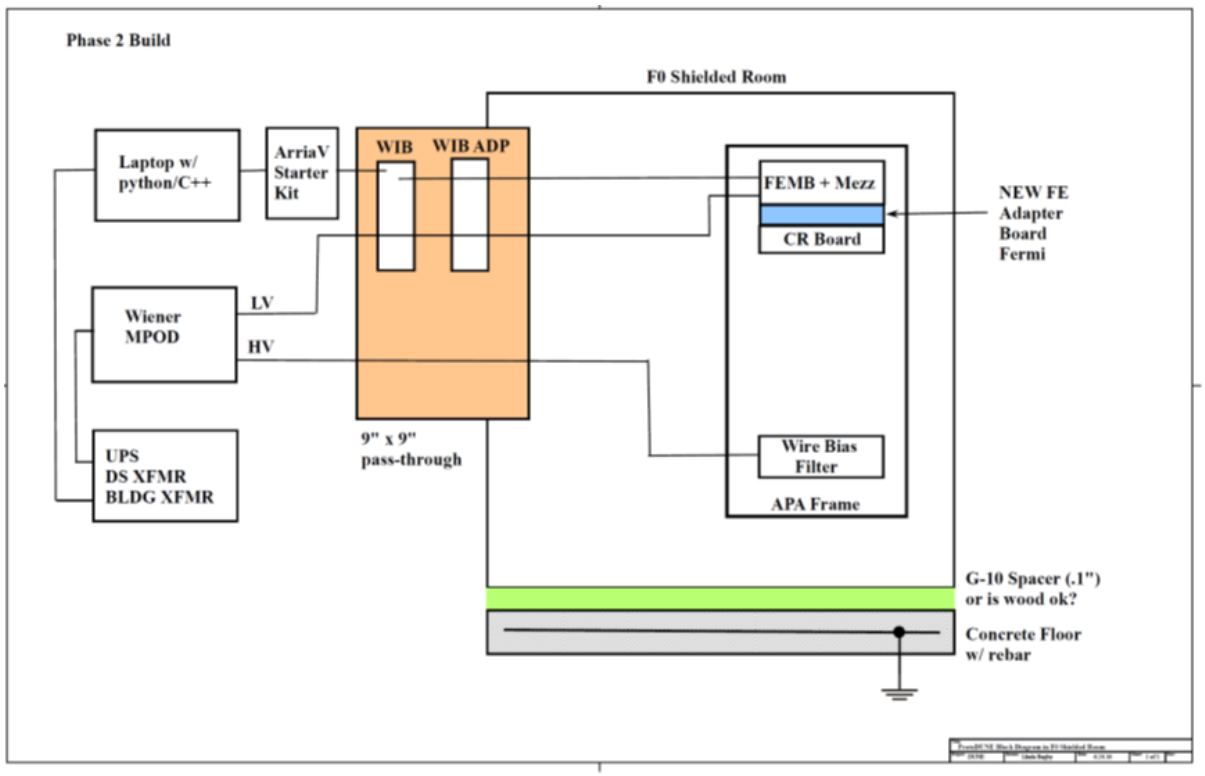

Equipment:

SBND WIB (BNL)

WIB Adapter (BNL)

Flange interface

Test:

1. Configure ASICs, measure gain, shaping function response, test pulse (linearity), and noise pedestal for 3 AC power sources.
2. Compare data with BNL data.

Phase 3 (November/December)

Goals:

1. Integrate RCE DAQ and Preproduction Warm Electronics Crate.

Location: DAB Sidewalk

Test Stand graphic:

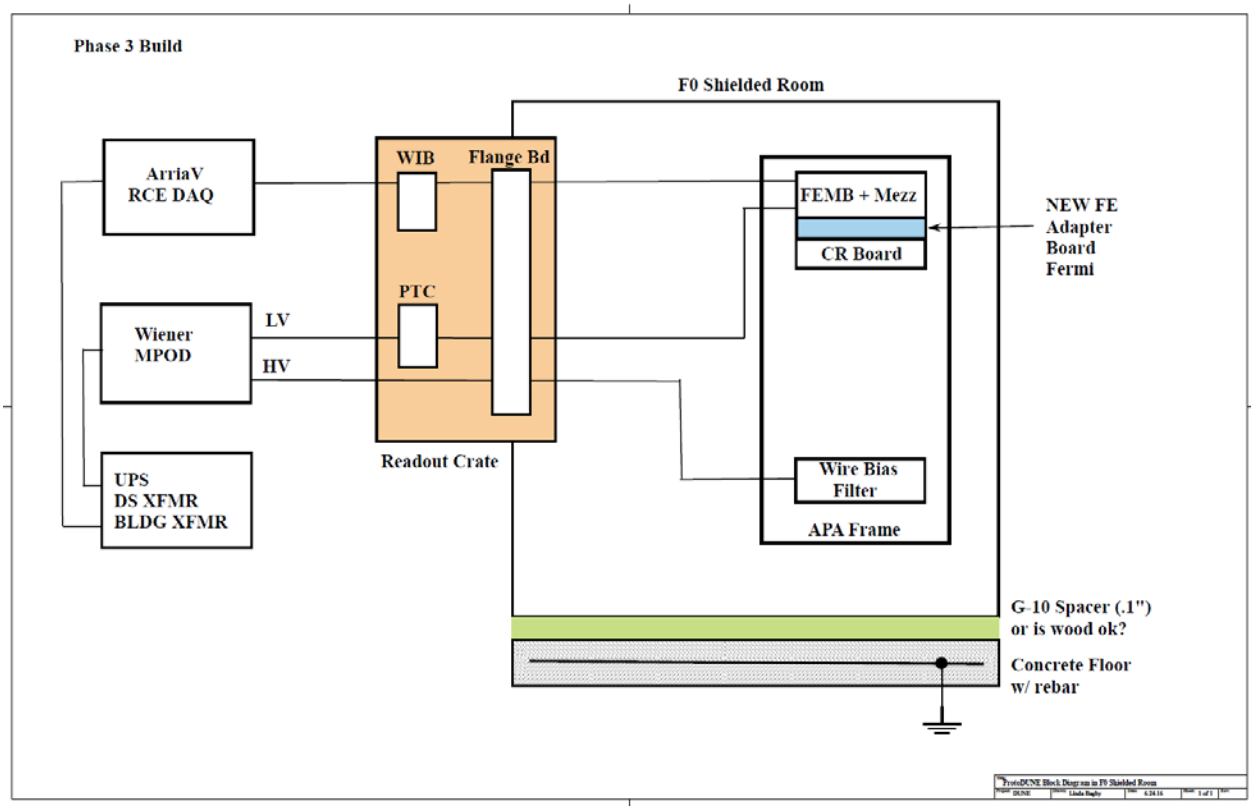

Equipment:

Full warm electronics crate (ProtoDUNE WIB/Flange Board/PTC) (BNL)

RCE DAQ (SLAC)

Feedthrough pipe (Mechanical Engineer support needed)

Test:

2. Configure ASICs, measure gain, shaping function response, test pulse (linearity) and noise pedestal for 3 AC power sources, starting with ArriaV interface.
3. Same measurements as above with RCE DAQ.
4. Compare data with BNL data.

Additional Testing Options

Measure effect of Wire Bias on noise pedestal.