SBN FAR DETECTOR BUILDING

90% REVIEW - 03-02-2015

DESIGN TEAM

HOLABIRD & ROOT

140 South Dearborn Chicago, IL 60603
Tel: 312 357 1771 Fax: 312 357 1909

www.holabird.com

KJWW ENGINEERING CONSULTANTS
The FUTURE. Built SMARTER.®
1100 WARRENVILLE ROAD, SUITE 400W
NAPERVILLE, ILLINOIS 60563
630.527.2320 FAX: 630.527.2321
www.kjww.com
PROJECT #
Illinois Design Firm Registration #184-000973

KJWW ENGINEERING RESERVES PROPRIETARY RIGHTS, INCLUDING COPYRIGHTS, TO THIS DRAWING AND THE DATA SHOWN THEREON. SAID DRAWING AND/OR DATA ARE THE EXCLUSIVE PROPERTY OF KJWW ENGINEERING AND SHALL NOT BE USED OR REPRODUCED FOR ANY OTHER PROJECT WITHOUT THE EXPRESS WRITTEN APPROVAL AND PARTICIPATION OF KJWW ENGINEERING. © 2015 KJWW, P.C.

REFERENCE SCALE IN INCHES
0 1 2 3

CMT
CRAWFORD, MURPHY & TILLY, INC.
CONSULTING ENGINEERS

550 NORTH COMMONS DRIVE
SUITE 116
AURORA, ILLINOIS
60504
(630) 820-1022
(630) 820-0350 FAX

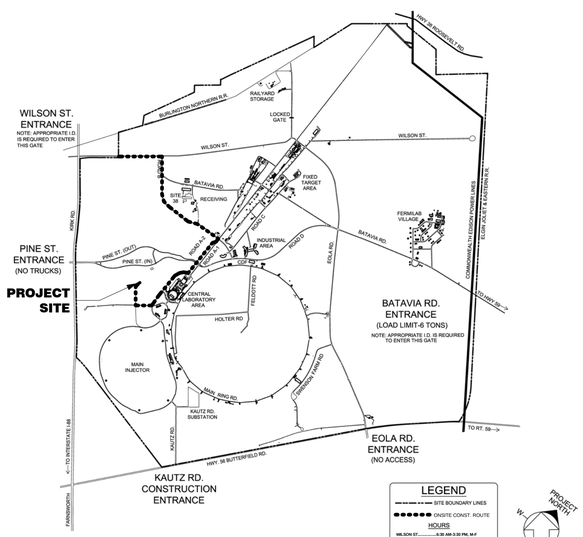

VICINITY PLAN

SCALE: N.T.S.

SHEET INDEX

GENERAL DRAWINGS
G-1 VICINITY PLAN AND SHEET LIST
G-2 ABBREVIATIONS & SYMBOLS
G-3 LIFE SAFETY PLANS

ARCHITECTURAL DRAWINGS
A-0 ARCHITECTURAL SITE PLAN
A-1 ENCLOSURE LEVEL PLAN
A-2 MEZZANINE LEVEL PLAN
A-3 MAIN LEVEL PLAN
A-4 ROOF PLAN
A-5 BUILDING ELEVATIONS
A-6 LONGITUDINAL SECTION
A-7 TRANSVERSE SECTIONS
A-8 WALL SECTIONS - 1
A-9 WALL SECTIONS - 2
A-10 WALL SECTIONS - 3
A-11 EXTERIOR DETAILS - 1
A-12 EXTERIOR DETAILS - 2
A-13 EXTERIOR DETAILS - 3
A-14 ROOF & CANOPY DETAILS
A-15 MECH. SCREEN AND ENTRY SCREEN ENLARGED ELEVATIONS & DETAILS
A-16 STAIR #1 PLANS & SECTIONS
A-17 STAIR #2 PLANS & SECTIONS
A-18 STAIR & RAILING DETAILS - NOT ISSUED
A-19 ENLARGED PLANS, RCPS & ELEVATIONS AT ENTRY, TOILET ROOMS & J.C.
A-20 DOOR & FINISH SCHEDULE, DOOR HARDWARE & DETAILS
A-21 PARTITION TYPES AND DETAILS

STRUCTURAL DRAWINGS
S-0 STRUCTURAL GENERAL NOTES
S-1 STRUCTURAL ABBREVIATIONS
S-2 STRUCTUAL LOAD DIAGRAMS
S-3 ENCLOSURE LEVEL FOUNDATION PLAN
S-4 MEZZANINE LEVEL FRAMING PLAN
S-5 SHIELDING LEVEL FRAMING PLAN
S-6 FIRST LEVEL FRAMING PLAN
S-7 ENTRY ROOF FRAMING PLAN
S-8 LOW ROOF FRAMING PLAN
S-9 UPPER ROOF FRAMING PLAN
S-10 30t OVERHEAD CRANES - PLAN, SECTIONS AND DETAILS
S-11 TYPICAL CONCRETE DETAILS
S-12 TYPICAL CONCRETE DETAILS
S-13 CONCRETE COLUMN SCHEDULE & DETAILS
S-14 TYPICAL STEEL DETAILS
S-15 TYPICAL STEEL DETAILS
S-16 STEEL COLUMN SCHEDULE & DETAILS
S-17 BRACING ELEVATIONS
S-18 BRACING DETAILS
S-19 FOUNDATION DETAILS
S-20 MEZZANINE FRAMING DETAILS
S-21 SHIELDING FRAMING DETAILS
S-22 ROOF FRAMING DETAILS

MECHANICAL DRAWINGS
M-1 MECHANICAL COVER SHEET
M-2 ENCLOSURE LEVEL MECHANICAL PLAN
M-3 MEZZANINE LEVEL MECHANICAL PLAN
M-4 GRADE LEVEL MECHANICAL PLAN
M-5 ROOF LEVEL MECHANICAL PLAN
M-6 MECHANICAL DETAILS
M-7 MECHANICAL DETAILS
M-8 MECHANICAL DETAILS
M-9 MECHANICAL SCHEDULES
M-10 MECHANICAL CONTROL DIAGRAMS
M-11 MECHANICAL CONTROL DIAGRAMS
M-12 MECHANICAL CONTROL DIAGRAMS

PLUMBING DRAWINGS
P-1 PLUMBING COVER SHEET
P-2 UNDER FLOOR PLAN - PLUMBING
P-3 ENCLOSURE LEVEL PLUMBING PLAN
P-4 MEZZANINE LEVEL PLUMBING PLAN
P-5 GRADE LEVEL PLUMBING PLAN
P-6 ROOF LEVEL PLUMBING PLAN
P-7 PLUMBING ENLARGED PLAN
P-8 PLUMBING DETAILS
P-9 PLUMBING DETAILS
P-10 PLUMBING MATERIAL LIST

FIRE PROTECTION DRAWINGS
FP-1 FIRE PROTECTION COVER SHEET
FP-2 ENCLOSURE LEVEL FIRE PROTECTION PLAN
FP-3 MEZZANINE LEVEL FIRE PROTECTION PLAN
FP-4 GRADE LEVEL FIRE PROTECTION PLAN
FP-5 FIRE PROTECTION RISER DIAGRAM
FP-6 FIRE PROTECTION DETAILS & SCHEDULES

ELECTRICAL DRAWINGS
E-1 ELECTRICAL COVER SHEET
E-2 ELECTRICAL SITE PLAN
E-3 BUILDING GROUNDING PLAN
E-4 ENCLOSURE LEVEL POWER PLAN
E-5 MEZZANINE LEVEL POWER PLAN
E-6 GRADE LEVEL POWER PLAN
E-7 ENCLOSURE LEVEL LIGHTING PLAN
E-8 MEZZANINE LEVEL LIGHTING PLAN
E-9 GRADE LEVEL LIGHTING PLAN
E-10 ONE LINE DIAGRAM - NORMAL
E-11 ONE LINE DIAGRAM - EMERGENCY
E-12 ELECTRICAL DETAILS
E-13 ELECTRICAL DETAILS
E-14 ELECTRICAL DETAILS
E-15 ELECTRICAL DETAILS
E-16 PANEL SCHEDULES
E-17 PANEL SCHEDULES
E-18 PANEL SCHEDULES
E-19 ELECTRICAL SCHEDULES
E-20 ELECTRICAL SCHEDULES
E-21 ELECTRICAL SCHEDULES

FIRE ALARM DRAWINGS
FA-1 ENCLOSURE LEVEL FIRE ALARM PLAN
FA-2 MEZZANINE LEVEL FIRE ALARM PLAN
FA-3 GRADE LEVEL FIRE ALARM PLAN
FA-4 FIRE ALARM MATERIAL LIST AND DETAILS

NOT FOR CONSTRUCTION

REV.	DATE	DESCRIPTION
4	02/23/15	ISSUED FOR 90% COST ESTIMATE
3	01/26/15	ISSUED FOR 60% REVIEW
2	01/16/15	ISSUED FOR PRICING
1	12/23/14	SCHEMATIC DESIGN

REVISIONS

	FERMI LAB	DATE
DESIGNED	M.BLEWITT	03/02/2015
DRAWN	M.BLEWITT	03/02/2015
CHECKED	G.GRUNLOH	03/02/2015
APPROVED		
SUBMITTED		

SCALE:

FERMI NATIONAL ACCELERATOR LABORATORY
UNITED STATES DEPARTMENT OF ENERGY

SBN FAR DETECTOR BUILDING
VICINITY PLAN AND SHEET LIST

DRAWING NO. 6-7-93 G-1 REV. 4

02 MAR. 2015

C:\Users\Matt_Bl\Desktop\Revit Locals\15592_SBN_Far_Detector_blewittm.rvt

3/2/2015 6:59:45 PM

ARCHITECTURAL ABBREVIATIONS LIST

A

A/C	AIR CONDITIONING
ACC	ACCESSIBLE
ACT	ACOUSTICAL TILE
ADA	AMERICANS WITH DISABILITIES
ADD	ADDENDUM
ADD'L	ADDITIONAL
ADJ	ADJUSTABLE
AFF	ABOVE FINISHED FLOOR
ALT	ALTERNATE
ALUM	ALUMINUM
AP	ACCESS PANEL
APPD	APPROVED
APPROX	APPROXIMATE
ARCH	ARCHITECT(URAL)
AUTH	AUTHORIZED
AUTO	AUTOMATIC
A/V	AUDIO/VISUAL

B

B/	BOTTOM OF
BEL	BELOW
BTWN	BETWEEN
BEV	BEVELED
BLKG	BLOCK(ING)
BLDG	BUILDING
BM	BEAM
BOT	BOTTOM
BRK	BRICK
BSMT	BASEMENT
BTU	BRITISH THERMAL UNIT
BUR	BUILT-UP ROOFING

C

C	CENTER
CAB	CABINET
CAP	CAPACITY
CEM	CEMENT
CER	CERAMIC
CFT	CUBIC FOOT (FEET)
CG	CORNER GUARD
CHAM	CHAMFER
CIR	CIRCLE
CIRC	CIRCUMFERENCE
CJ	CONTROL JOINT
CK	CAULKING
CLG	CEILING
CLO	CLOSET
CLR	CLEARANCE/CLEAR
CLS	CLOSURE
CM	CENTIMETER(S)
CMU	CONCRETE MASONRY UNIT
CO	CLEAN OUT
COEF	COEFFICIENT
COL	COLUMN
COMB	COMBINATION
COMP	COMPRESS(ED), (ION), (IBLE)
CONC	CONCRETE
CONN	CONNECTION
CONST	CONSTRUCTION
CONT	CONTINUOUS OR CONTINUE
CONV	CONVECTOR
COP	COPING
CORR	CORRIDOR
CPT	CARPET(ED)
CRW	CURTAIN WALL
CS	COUNTERSINK
CSMT	CASEMENT
CT	CERAMIC TILE
CW	COLD WATER
CY	CUBIC YARDS

D

D	DEPTH
DB	DECIBELS
DEG	DEGREE(S)
DEG C	DEGREE(S) CELSIUS
DEG F	DEGREE(S) FAHRENHEIT
DEPT	DEPARTMENT
DET	DETAIL
DH	DOUBLE HUNG
DIA	DIAMETER
DIM	DIMENSION
DN	DOWN
DP	DAMP PROOFING
DR	DOOR
DS	DOWNSPOUT
DWG	DRAWING

E

E	EAST
EA	EACH
EL	ELEVATION
ELEC	ELECTRIC(AL)
EMER	EMERGENCY
ENCL	ENCLOSE (URE)
ENG	ENGINEER
EQ	EQUAL
EQUIP	EQUIPMENT
EWC	ELECTRIC WATER COOLER
EXP	EXPOSED
EXH	EXHAUST
EXIST	EXISTING
EXP	EXPANSION
EXT	EXTERIOR

F

FAST	FASTENER
FD	FLOOR DRAIN
FE	FIRE EXTINGUISHER
FEC	FIRE EXTINGUISHER CABINET
FFL	FINISH FLOOR LINE
FHC	FIRE HOSE CABINET
FHMS	FLATHEAD MACHINE SCREW
FHWS	FLATHEAD WOOD SCREW
FIN	FINISH(ED)
FLG	FLASHING
FLR	FLOOR(ING)
FLUOR	FLUORESCENT
FR	FRAME(D), (ING)
FS	FULL SIZE
FT	FOOT (FEET)
FTG	FOOTING
FUR	FURRED, FURRING
FUT	FUTURE
VIF	FIELD VERIFY

G

GA	GAGE, GAUGE
GALV	GALVANIZED
GD	GRADE, GRADING
GFR	GLASS FIBER REINFORCED
GFRC	GFR CONCRETE
GKT	GASKET(ED)
GL	GLASS, GLAZING
GPDW	GYPSUM DRYWALL
GT	GROUT
GWB	GYPSUM WALL BOARD
GYP	GYPSUM

H

H	HIGH
HB	HOSE BIBB
HCAP	HANDICAP
HD	HEAD
HDW	HARDWARE
HEX	HEXAGONAL
HM	HOLLOW METAL
HORIZ	HORIZONTAL
HP	HORSEPOWER
H.P.	HIGH POINT
HR	HOUR
HT	HEIGHT
HTG	HEATING
HVAC	HEATING/VENTILATION/AIR CONDITIONING
HW	HOT WATER
HYD	HYDRAULIC

I

ID	INSIDE DIAMETER
IN	INCH(ES)
INCL	INCLUDE(D), (ING)
INFO	INFORMATION
INSUL	INSULATION
INT	INTERIOR
INTERM	INTERMEDIATE

J

J	JOIST
JAN	JANITOR
JC	JANITOR'S CLOSET
JT	JOINT

K

KG	KILOGRAM(S)
KM	KILOMETER(S)
KO	KNOCKOUT

L

L	LENGTH
LAM	LAMINATE(D)
LAT	LATERAL
LAV	LAVATORY
LB	POUND(S)
LBL	LABEL
LH	LEFT HAND
LIN	LINEAR
L.P.	LOW POINT
LTG	LIGHTING
LTL	LINTEL
LVR	LOUVER

M

M	METER(S)
MACH	MACHINE
MAN	MANUAL
MAS	MASONRY
MAT'L	MATERIAL(S)
MAX	MAXIMUM
MECH	MECHANICAL
MED	MEDIUM
MEMB	MEMBRANE
MTL	METAL
MEZZ	MEZZANINE
MFR	MANUFACTURE(R), (ED)
MI	MILE(S)
MIN	MINIMUM
MISC	MISCELLANEOUS
MO	MASONRY OPENING
MTD	MOUNTED
MULL	MULLION

N

N	NORTH
NAT	NATURAL
NC	NO CEILING
NIC	NOT IN CONTRACT
NO.	NUMBER
NOM	NOMINAL
NRC	NOISE REDUCTION COEFFICIENT
NTS	NOT TO SCALE

O

OA	OVERALL
OC	ON CENTER
OD	OUTSIDE DIAMETER
OFF	OFFICE
OH	OVERHEAD
O.H.	OPPOSITE HAND
OHMS	OVALHEAD MACHINE SCREW
OHWS	OVALHEAD WOOD SCREW
OPNG	OPENING
OPP	OPPOSITE

P

PAR	PARALLEL
PBD	PARTICLE BOARD
P.D.	PLAN DETAIL
PERF	PERFORATE(D)
PERIM	PERIMETER
PERP	PERPENDICULAR
PKG	PARKING
PL	PLATE
P.L.	PROPERTY LINE
PLAM	PLASTIC LAMINATE
PLBG	PLUMBING
PNL	PANEL
PNT	PAINT(ED)
POL	POLISH(ED)
PREFAB	PREFABRICATED
PRES	PRESSURE
PROJ	PROJECTION
PROT	PROTECTION
PSI	POUNDS PER SQUARE INCH
PT	POINT
PTN	PARTITION
PVC	POLYVINYL CHLORIDE
PW	PAINTED WOOD

Q

QT	QUARRY TILE
QTY	QUANTITY

R

R	RISER
RAD	RADIUS
RB	RUBBER BASE
RD	ROOF DRAIN
REV	REVISION, REVISE(D)
RECP	RECEPTACLE
REF	REFERENCE
REFL	REFLECT(ED), (ING)
REINF	REINFORCE(D), (ING)
REQD	REQUIRED
RFI	REQUEST FOR INFORMATION
RH	RIGHT HAND
RM	ROOM
RO	ROUGH OPENING

S

S	SOUTH
SAFB	SOUND ATTENUATION FIRE BLANKET
SAN	SANITARY
SC	SEALED CONCRETE
SCHED	SCHEDULE
SEC	SECOND
SECT	SECTION
SERV	SERVICE
SF	SQUARE FOOT
SGL	SAFETY GLASS
SHT	SHEET
SIM	SIMILAR
SK	SKETCH
S.J.	SEALANT JOINT
SPEC(S)	SPECIFICATION(S)
SQ	SQUARE
SSK	SERVICE SINK
SST	STAINLESS STEEL
STD	STANDARD
STIFF	STIFFENER
STL	STEEL
STOR	STORAGE
STRUCT	STRUCTURE, STRUCTURAL
SUSP	SUSPEND, SUSPENDED
SYM	SYMMETRY, SYMMETRICAL

T

T	TREAD
T/	TOP OF
TEMP	TEMPERATURE
TERR	TERRAZZO
THK	THICK(NESS)
THRU	THROUGH
TYP	TYPICAL

U

UC	UNDERCUT
UL	UNDERWRITER'S LABORATORY
UNEX	UNEXCAVATED
UNO	UNLESS NOTED OTHERWISE
UR	URINAL

V

VAPB	VAPOR BARRIER
VB	VINYL BASE
VCT	VINYL COMPOSITE TILE
VERT	VERTICAL
VEST	VESTIBULE
VIF	VERIFY IN FIELD
VT	VINYL TILE

W

W	WEST
W/	WITH
WC	WATER CLOSET
WD	WOOD
WIN	WINDOW
WL	WIND LOAD
W/O	WITHOUT
WP	WATERPROOFING
WPT	WORKING POINT
WRSTP	WEATHER STRIPPING
WT	WEIGHT
WWF	WELDED WIRE FABRIC

Y

YD	YARD

MATERIAL DESIGNATIONS

- EARTH/ COMPACT FILL
- GRAVEL/ POROUS FILL
- ROCK
- CONCRETE: CAST IN PLACE/ PRECAST
- SAND/ MORTAR/ PLASTER
- CONCRETE MASONRY UNIT
- COMMON/ FACE BRICK
- CUT STONE
- MARBLE
- STEEL
- ALUMINUM
- ROUGH WOOD
- FINISH WOOD
- PLYWOOD
- PARTICLE BOARD
- BATT INSULATION
- RIGID INSULATION
- SPRAYED-ON FIREPROOFING
- SEALANT WITH BACKER ROD
- GYPSUM DRYWALL
- METAL LATH WITH PLASTER
- TERRAZZO
- GLASS
- ACOUSTICAL TILE

ARCHITECTURAL SYMBOLS LIST

DRAWING TITLE

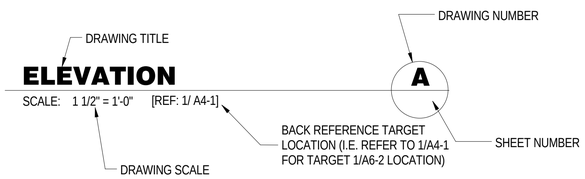

NORTH ARROWS

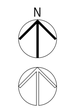

REVISION TARGET

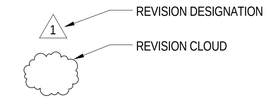

COLUMN LINE GRID & NUMBERS

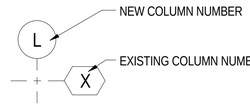

ALIGN

SECTION TARGET

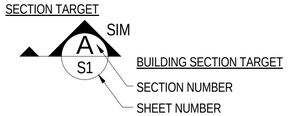

FIRE-RATED WALL SYMBOLS

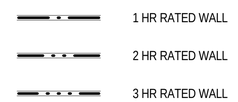

DETAIL TARGET

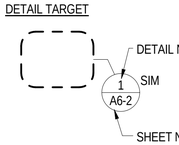

WALL SYMBOLS

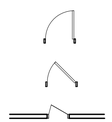

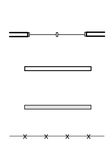

ELEVATION TARGET

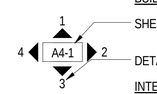

ACCESSIBILITY SYMBOLS

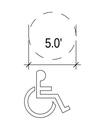

INTERIOR ELEVATION TARGET

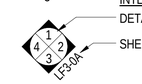

ROOM NAME & NUMBER TARGET

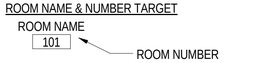

ELECTRICAL CONTROL ON DOOR

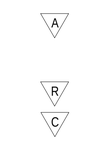

DOOR TARGET

PARTITION TYPE TARGET

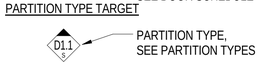

KEYNOTE TARGET

TOILET ACCESSORIES TARGET

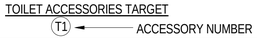

GENERAL NOTES

1. SUBCONTRACTOR SHALL VISIT THE SITE PRIOR TO SUBMITTING ITS BID TO DETERMINE ACTUAL FIELD CONDITIONS PRESENTLY EXISTING, AND IDENTIFY ANY SUCH CONDITIONS WHICH MAY AFFECT ITS BID. THE SUBMITTING OF A BID FOR THE PROJECT WILL SERVE AS NOTICE THAT THE SUBCONTRACTOR HAS MADE THE AFORESAID DETERMINATIONS AS NO ADDITIONAL SUMS WILL BE ALLOWED FOR FAILURE TO DO SO.
2. SUBCONTRACTOR SHALL VERIFY ALL EXISTING JOB SITE CONDITIONS PERTAINING TO THE DEMOLITION WORK INDICATED AND/OR IMPLIED ON THE DRAWINGS AND SHALL REPORT ANY DISCREPANCIES AND/OR OMISSIONS WHICH WOULD INTERFERE WITH SATISFACTORY COMPLETION OF THE NEW WORK PRIOR TO SUBMITTING A BID.
3. SUBCONTRACTOR SHALL VERIFY ALL FIELD CONDITIONS FOR COORDINATION OF ALL TRADES & SUBCONTRACTORS & REPORT ANY CONFLICTS OR DISCREPANCIES TO THE ARCHITECT.
4. SUBCONTRACTOR SHALL EXERCISE CARE TO AVOID DAMAGE TO EXISTING WORK, ADJACENT SURFACES AND ADJOINING AREAS INCLUDING BUT NOT LIMITED TO THE PORTION OF THE WORK THAT IS TO REMAIN AS PART OF THE COMPLETED CONSTRUCTION. SUBCONTRACTOR SHALL BE REQUIRED TO REPAIR OR OTHERWISE RESTORE ANY SUCH AREAS OR SURFACES THAT BECOME DAMAGED OR REMOVED ON ACCOUNT OF THE DEMOLITION WORK.
5. THE SUBCONTRACTOR SHALL PROVIDE TEMPORARY BRACING AND SHORING WITH CONNECTIONS OF SUFFICIENT STRENGTH TO BEAR IMPOSED LOADS, AND TO PROTECT ALL PERSONS & PROPERTY TO ENSURE PROPER ALIGNMENT. THE CONTRACTOR SHALL ASSUME RESPONSIBILITY FOR PROVIDING ADEQUATE BRACING OF WALLS DURING DEMOLITION TO PREVENT DAMAGE DUE TO LATERAL LOADS AND CONSTRUCTION IMPACTS. SUBCONTRACTOR SHALL ASSUME ALL RESPONSIBILITY FOR ANY DAMAGES DUE TO HIS FAILURE TO TAKE SUCH PRECAUTIONS.
6. PROVIDE & MAINTAIN SHORING, BRACING, & STRUCTURAL SUPPORTS AS REQUIRED TO PRESERVE STABILITY & PREVENT MOVEMENT, SETTLEMENT, OR COLLAPSE OF CONSTRUCTION OR FINISHES THAT ARE TO REMAIN. PREVENT UNEXPECTED OR UNCONTROLLED MOVEMENT OF COLLAPSE OF CONSTRUCTION BEING DEMOLISHED, WHERE SHORING IS REQUIRED. SUBCONTRACTOR IS TO PROVIDE SHORING PROCEDURES/DETAILS TO THE ARCHITECT OF RECORD FOR REVIEW PRIOR TO THE START OF WORK.
7. SUBCONTRACTORS WHO ARE CUTTING CONCRETE SLABS SHALL VERIFY LOCATIONS OF EXISTING UNDER SLAB UTILITIES, PLUMBING, ELECTRIC, ETC. PRIOR TO ANY CUTTING OR CORING THROUGH SLAB.
8. DISCONNECT & CAP EXISTING UTILITIES, POWER, GAS, WATER, ETC, IN ACCORDANCE WITH ALL GOVERNING CODE REQUIREMENTS - REFER TO MECHANICAL DRAWINGS.
9. FERMILAB TO OBTAIN AND PAY FOR ALL NECESSARY PERMITS AND FEES.
10. ALL WORK TO BE DONE IN ACCORDANCE WITH APPLICABLE BUILDING CODES & ALL OTHER CODES THAT HAVE AUTHORITY OVER THIS PROJECT. SECURE REQUIRED PERMITS, PROVIDE ALL NECESSARY SAFEGUARDS, BARRIERS, TEMPORARY POWER, LIGHTING, FIRE PROTECTION, ETC. AS REQUIRED.
11. SUBCONTRACTOR SHALL INSTALL MATERIALS & SYSTEMS IN ACCORDANCE WITH MANUFACTURER'S INSTRUCTIONS AND REVIEWED SUBMITTALS.

NOT FOR CONSTRUCTION

C:\Users\Matt_Bl\Desktop\Revit Locals\135592_SBN_Far_Detector_blewittm.rvt

3/2/2015 6:48:45 PM

REV.	DATE	DESCRIPTION

REVISIONS

HOLABIRD & ROOT

140 South Dearborn Chicago, IL 60603
Tel: 312 357 1771 Fax: 312 357 1909

www.holabird.com

FERMI LAB		DATE
DESIGNED	M.BLEWITT	
DRAWN	M.BLEWITT	03/02/2015
CHECKED	G.GRUNLOH	
APPROVED	Approver	
SUBMITTED		

SCALE:

FERMI NATIONAL ACCELERATOR LABORATORY

UNITED STATES DEPARTMENT OF ENERGY

SBN FAR DETECTOR BUILDING

ABBREVIATIONS & SYMBOLS

DRAWING NO. **6-7-93** **G-2** REV.

02 MAR. 2015

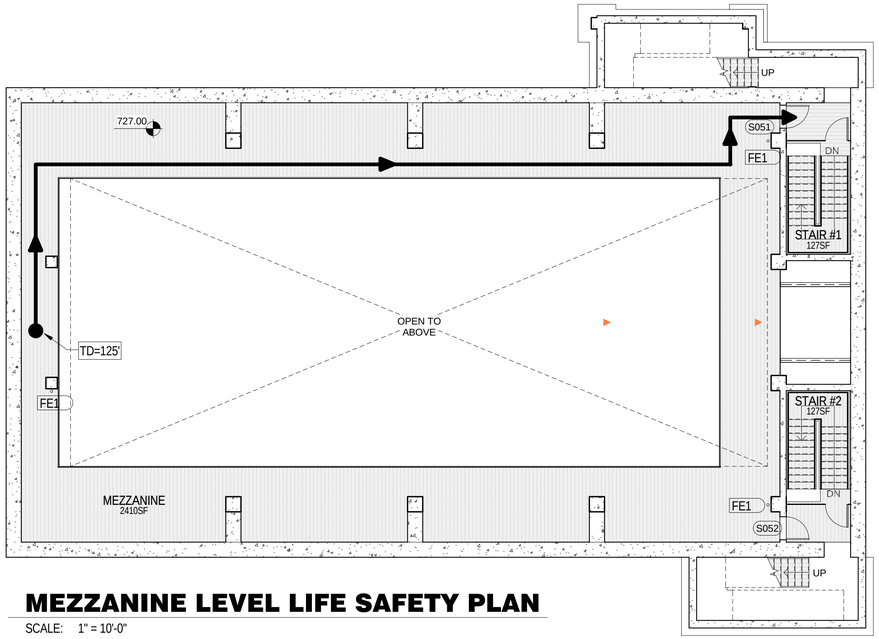

MEZZANINE LEVEL LIFE SAFETY PLAN

SCALE: 1" = 10'-0"

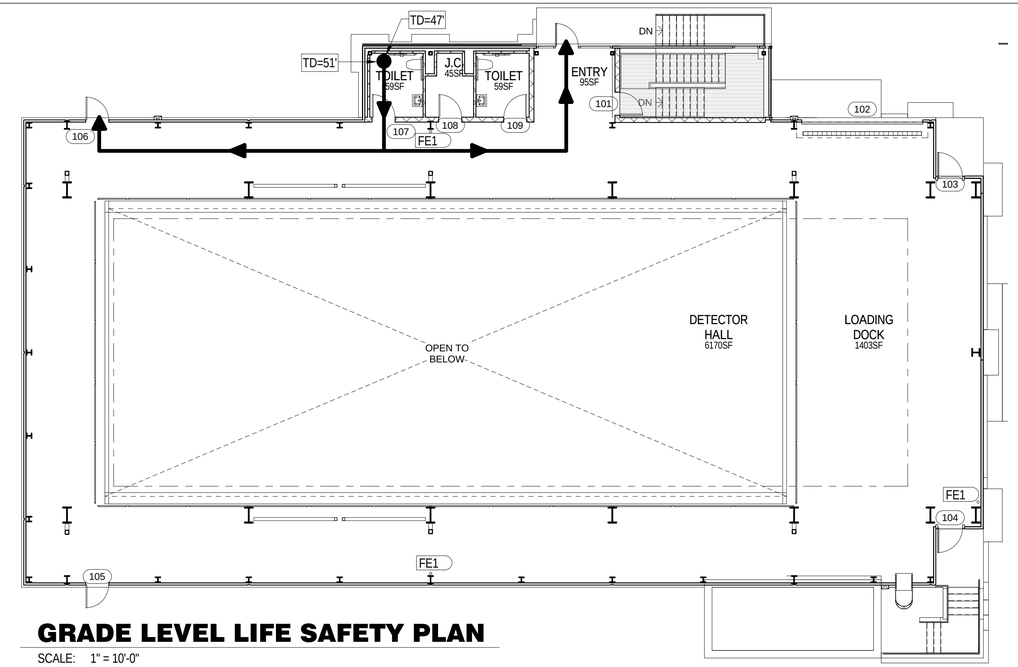

GRADE LEVEL LIFE SAFETY PLAN

SCALE: 1" = 10'-0"

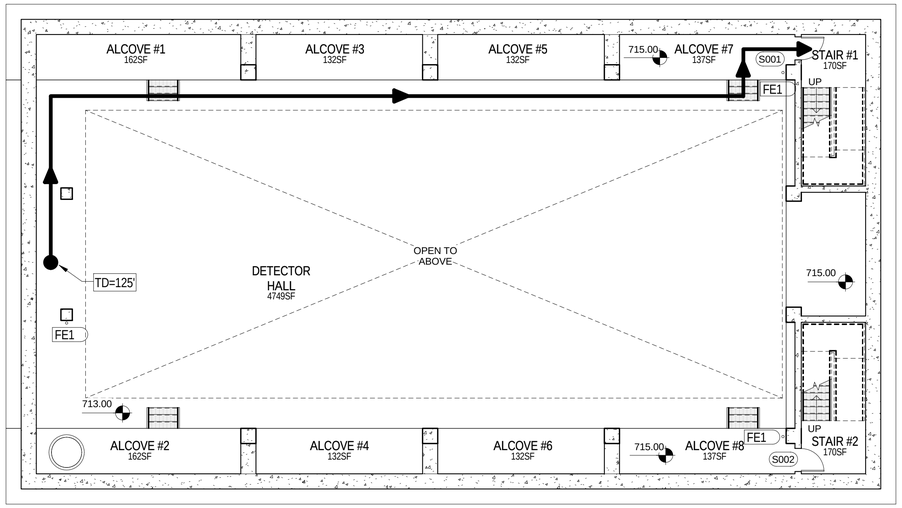

ENCLOSURE LEVEL LIFE SAFETY PLAN

SCALE: 1" = 10'-0"

CODE INFORMATION

PROJECT INCLUDES A SUPERVISED AUTOMATED SPRINKLER SYSTEM (SASS

APPLICABLE CODES

THESE PLANS & SPECIFICATIONS HAVE BEEN PREPARED IN ACCORDANCE WITH THE FOLLOWING BUILDING CODES & REGULATIONS.

ICC INTERNATIONAL BUILDING CODE 2012 EDITION
ICC INTERNATIONAL FIRE CODE 2012 EDITION
NFPA 101 - 2012 EDITION, THE LIFE SAFETY CODE

INTERNATIONAL MECHANICAL CODE 2012 EDITION (IMC)
ASHRAE STANDARDS: 15, 55, 62, 90.1, GUIDELINE 0, AEDG & HANDBOOK HVAC SYSTEMS AND EQUIPMENT

NFPA 54 NATIONAL FUEL GAS CODE 2012 EDITION

NATIONAL ELECTRICAL CODE 2012 EDITION (NFPA 70-2012)
INTERNATIONAL PLUMBING CODE

BUILDING TO HAVE SUPERVISED AUTOMATIC SPRINKLER SYSTEM (SASS) IN ACCORDANCE WITH IBC SECTION 903.3.1.1

REFERENCE	BASIC BUILDING INFORMATION		REMARKS
CHAPTER 3	USE & OCCUPANCY CLASSIFICATION		
IBC 306.3	FACTORY GROUP F-2: LOW HAZARD FACTORY INDUSTRIAL		
NFPA 101 3.3.271.11	INDUSTRIAL OCCUPANCY UNDERGROUND STRUCTURE		
CHAPTER 5	GENERAL BUILDING HEIGHT & AREA LIMITATIONS		
IBC TABLE 503	TYPE II-B CONSTRUCTION		
	FLOOR AREAS:	PER FLOOR	
	LOWER LEVEL	7,042 SF	
	MEZZANINE (BELOW-GRADE)	2,410 SF	
	GRADE LEVEL	4,390 SF	
	FLOOR AREA	13,842 SF	
IBC 504.2	HEIGHT: BUILDING = 1 STORIES & 34'-0" W/ SASS (MAX ALLOWED IS 3 STORIES & 75'-0" HEIGHT W/ SASS)		PER IBC CAN INCREASE HEIGHT BY 20'-0" & 1 STORY FOR TABLE 503 W/ SASS
IBC 506.1	AREA: BUILDING = 13,842 SF (MAX ALLOWED 46,000 SF W/ SASS)		PER IBC CAN DOUBLE ALLOWABLE AREA FOR TABLE 503 W/ SASS
IBC TABLE 508.2	INCIDENTAL USE AREA SEPARATION:		WITH SASS THE WALLS TO RESIST PASSAGE OF SMOKE & DOORS W/ CLOSER.
	STORAGE ROOMS OVER 100 SF	1-HR. OR 0-HR. W/ SASS	
	BOILER ROOMS OVER 15 PSI & 10 HP	1-HR. OR 0-HR. W/ SASS	
	REFRIGERANT MACHINERY ROOMS	1-HR. OR 0-HR. W/ SASS	
CHAPTER 6	TYPES OF CONSTRUCTION: II-A & II-B		
	TYPE II-B CONSTRUCTION		
IBC TABLE 601	RATINGS	BUILDING ELEMENTS	
IBC TABLE 602		STRUCTURAL FRAME:	
	0-HR	COLUMNS, GIRDERS, TRUSSES	
		BEARING WALLS:	
	0-HR	EXTERIOR	
	0-HR	INTERIOR	
		NONBEARING WALLS & PARTITIONS - EXTERIOR:	
	1-HR	FIRE SEPARATION DISTANCE <5', <10'	
	0-HR	FIRE SEPARATION DISTANCE >30', ≥30'	
		NONBEARING WALLS & PARTITIONS:	
	0-HR	INTERIOR	
		FLOOR CONSTRUCTION:	
	0-HR	BEAMS & JOISTS	
		ROOF CONSTRUCTION:	
	0-HR	BEAMS & JOISTS	
IBC 603.1	COMBUSTIBLE MATERIALS ARE PERMITTED IN TYPE I & II CONSTRUCTION. SEE IBC 603.1. FOR MATERIALS.		

NOT FOR CONSTRUCTION

REV.	DATE	DESCRIPTION
5	03/02/15	ISSUED FOR 90% REVIEW

REVISIONS

HOLABIRD & ROOT
140 South Dearborn Chicago, IL 60603
Tel: 312 357 1771 Fax: 312 357 1909
www.holabird.com

FERMI LAB		DATE
DESIGNED	M.BLEWITT	
DRAWN	M.BLEWITT	03/02/2015
CHECKED	G.GRUNLOH	
APPROVED		
SUBMITTED		

S W E PROJECT NORTH

SCALE: 1"=10'-0" 10 0 10 20 SCALE FEET

FERMI NATIONAL ACCELERATOR LABORATORY
UNITED STATES DEPARTMENT OF ENERGY

SBN FAR DETECTOR BUILDING
LIFE SAFETY PLANS

DRAWING NO. 6-7-93 G-3 REV. 5

02 MAR. 2015

C:\Users\Matt_B\Desktop\Revit Locals\15592_SBN_Far_Detector_blewittm.rvt

3/2/2015 6:48:48 PM

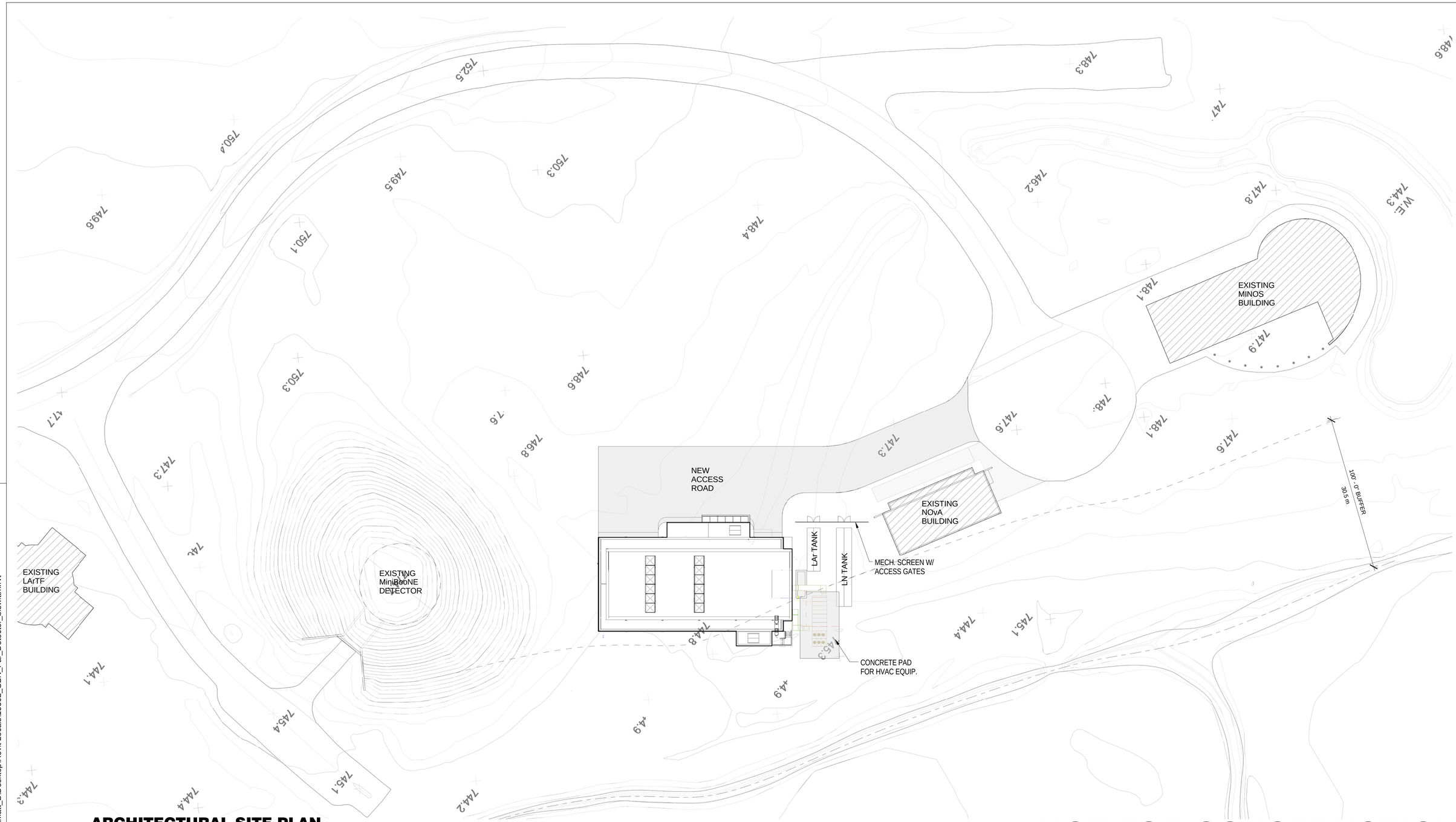

ARCHITECTURAL SITE PLAN

SCALE: 1" = 30'-0"

NOT FOR CONSTRUCTION

REV.	DATE	DESCRIPTION
5	03/02/15	ISSUED FOR 90% REVIEW
4	02/23/15	ISSUED FOR 90% COST ESTIMATE
3	01/26/15	ISSUED FOR 60% REVIEW
2	01/16/15	ISSUED FOR PRICING
1	12/23/14	SCHEMATIC DESIGN

REVISIONS

HOLABIRD & ROOT
140 South Dearborn Chicago, IL 60603
Tel: 312 357 1771 Fax: 312 357 1909
www.holabird.com

	FERMI LAB	DATE
DESIGNED	M.BLEWITT	03/02/2015
DRAWN	M.BLEWITT	03/02/2015
CHECKED	G.GRUNLOH	03/02/2015
APPROVED		
SUBMITTED		

S W E PROJECT NORTH

SCALE:
1"=30'-0"
30 0 30 60
SCALE FEET

FERMI NATIONAL ACCELERATOR LABORATORY
UNITED STATES DEPARTMENT OF ENERGY

SBN FAR DETECTOR BUILDING
ARCHITECTURAL SITE PLAN

DRAWING NO. 6-7-93 A-0 REV. 5

02 MAR. 2015

C:\Users\Matt_Bl\Desktop\Revit Locals\15592_SBN_Far_Detector_blewittm.rvt

3/2/2015 6:46:41 PM

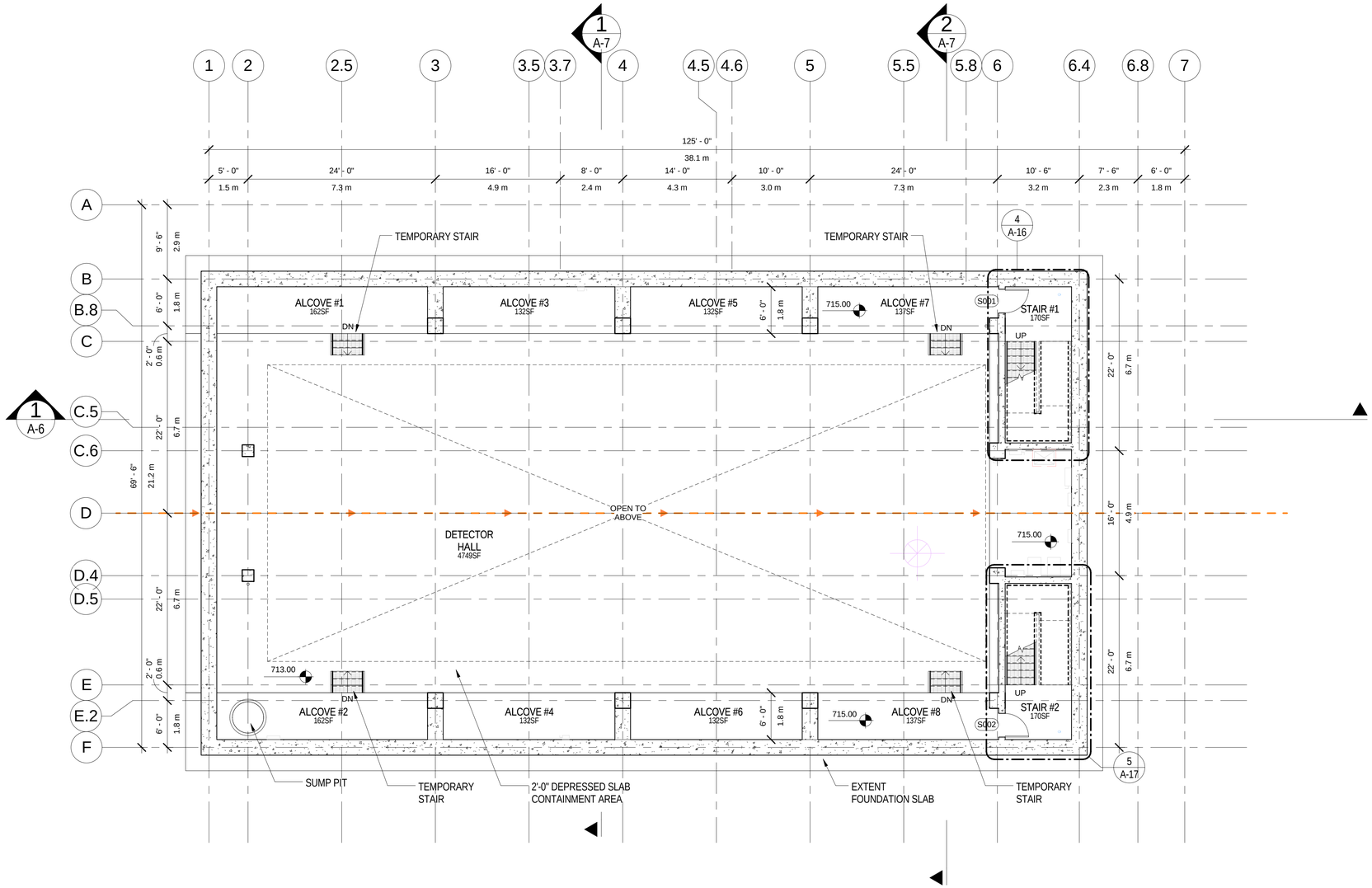

ENCLOSURE LEVEL PLAN

SCALE: 1/8" = 1'-0"

NOT FOR CONSTRUCTION

C:\Users\Matt_B\Desktop\Revit Locals\155592_SBN_Far_Detector_blewittm.rvt

3/2/2015 6:46:42 PM

REV.	DATE	DESCRIPTION
5	03/02/15	ISSUED FOR 90% REVIEW
4	02/23/15	ISSUED FOR 90% COST ESTIMATE
3	01/26/15	ISSUED FOR 60% REVIEW
2	01/16/15	ISSUED FOR PRICING
1	12/23/14	SCHEMATIC DESIGN

REVISIONS

HOLABIRD & ROOT
140 South Dearborn Chicago, IL 60603
Tel: 312 357 1771 Fax: 312 357 1909
www.holabird.com

	FERMI LAB	DATE
DESIGNED	M.BLEWITT	03/02/2015
DRAWN	M.BLEWITT	03/02/2015
CHECKED	G.GRUNLOH	03/02/2015
APPROVED		
SUBMITTED		

S W E PROJECT NORTH

SCALE: 1/8"=1'-0" 8 0 8 16 SCALE FEET

FERMI NATIONAL ACCELERATOR LABORATORY
UNITED STATES DEPARTMENT OF ENERGY

SBN FAR DETECTOR BUILDING
ENCLOSURE LEVEL PLAN

DRAWING NO. 6-7-93 A-1 REV. 5

02 MAR. 2015

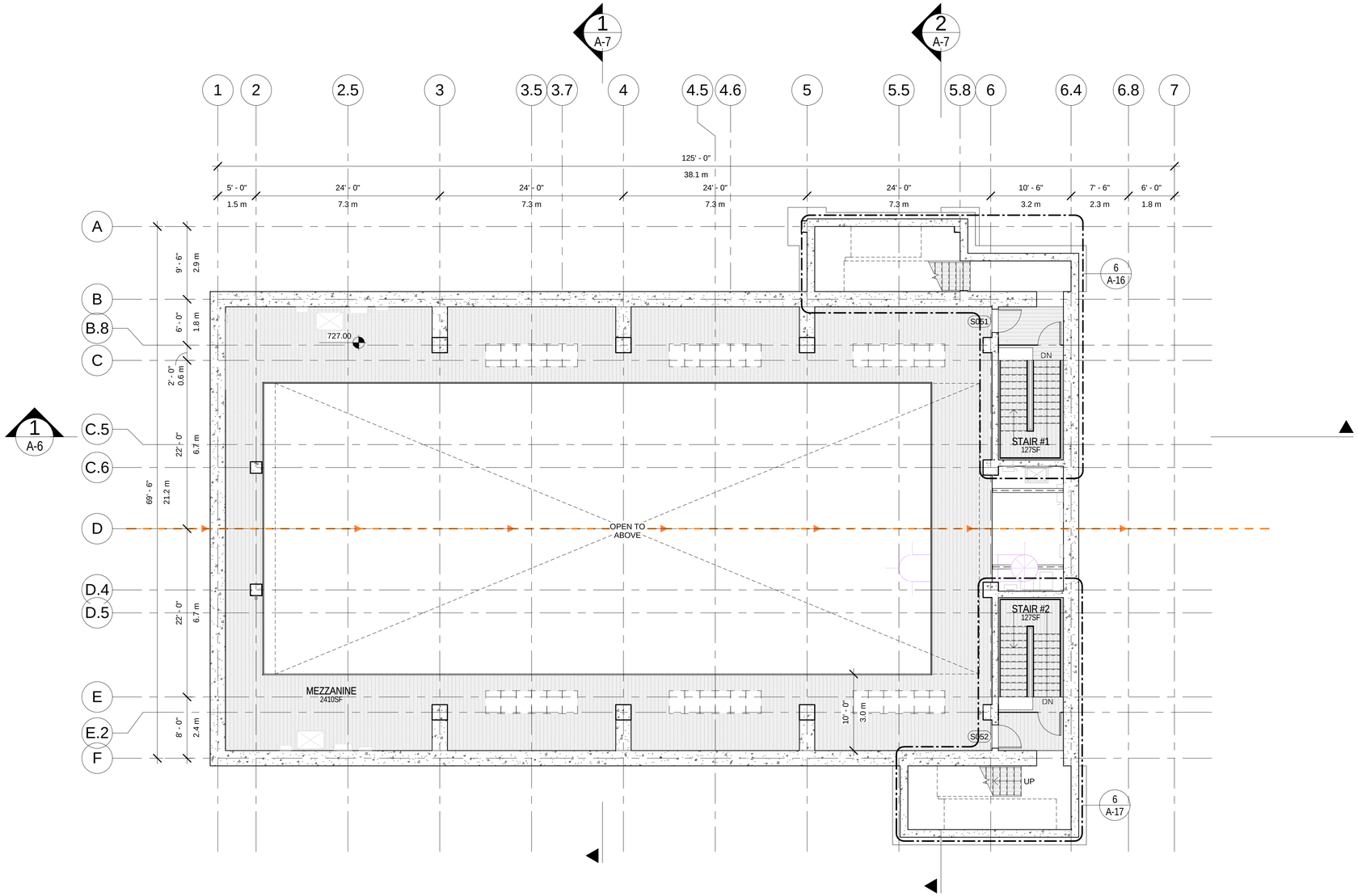

MEZZANINE LEVEL PLAN

SCALE: 1/8" = 1'-0"

NOT FOR CONSTRUCTION

REV.	DATE	DESCRIPTION
5	03/02/15	ISSUED FOR 90% REVIEW
4	02/23/15	ISSUED FOR 90% COST ESTIMATE
3	01/26/15	ISSUED FOR 60% REVIEW
2	01/16/15	ISSUED FOR PRICING
1	12/23/14	SCHEMATIC DESIGN

REVISIONS

HOLABIRD & ROOT
140 South Dearborn Chicago, IL 60603
Tel: 312 357 1771 Fax: 312 357 1909
www.holabird.com

	FERMI LAB	DATE
DESIGNED	M.BLEWITT	
DRAWN	M.BLEWITT	03/02/2015
CHECKED	G.GRUNLOH	
APPROVED		
SUBMITTED		

S W E PROJECT NORTH

SCALE:
1/8"=1'-0"
8 0 8 16
SCALE FEET

FERMI NATIONAL ACCELERATOR LABORATORY
UNITED STATES DEPARTMENT OF ENERGY

SBN FAR DETECTOR BUILDING
MEZZANINE LEVEL PLAN

DRAWING NO. **6-7-93** **A-2** REV. **5**

02 MAR. 2015

C:\Users\Matt_Bl\Desktop\Revit Locals\155592_SBN_Far_Detector_blewittm.rvt
3/2/2015 6:46:44 PM

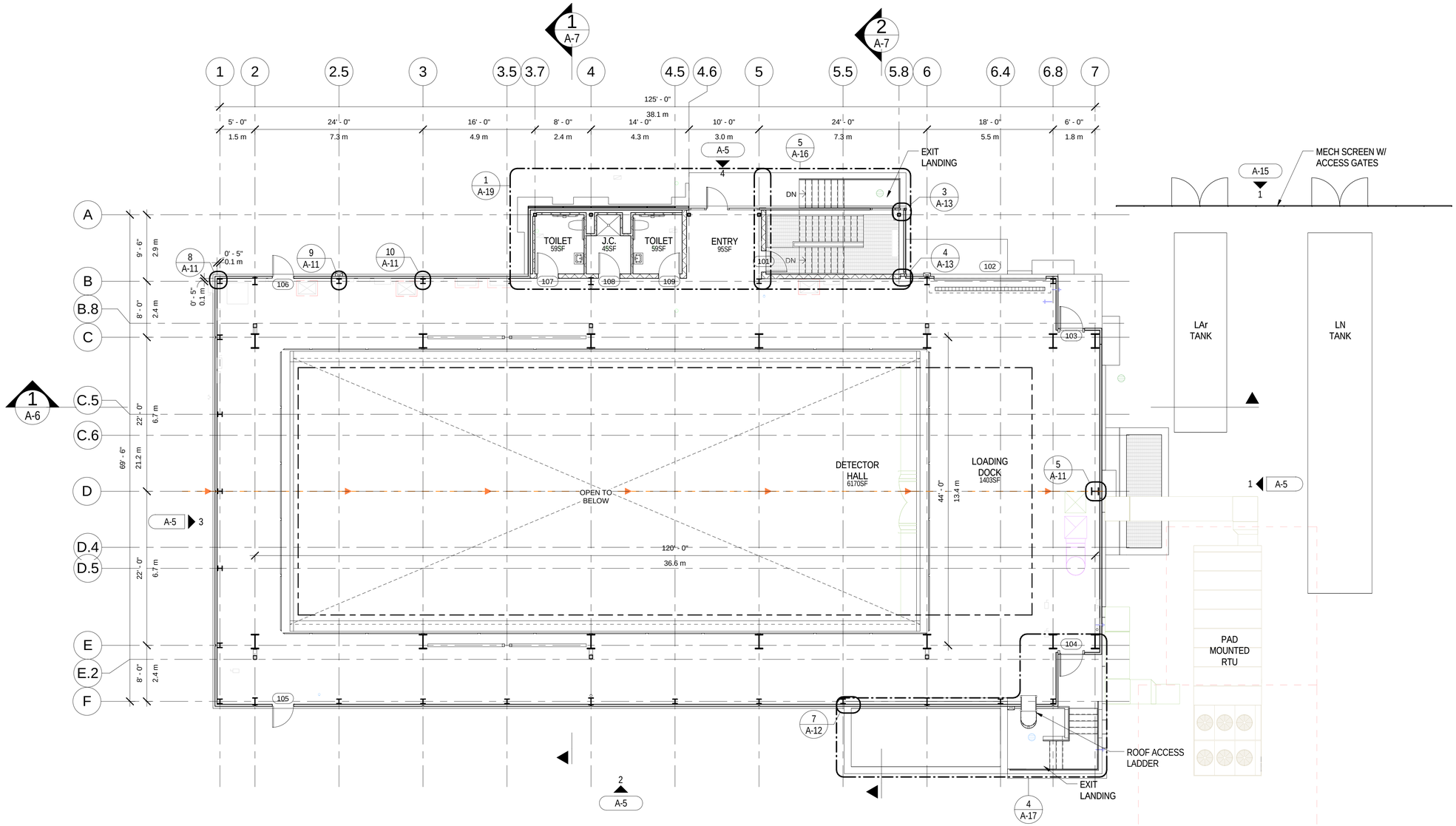

GRADE LEVEL PLAN

SCALE: 1/8" = 1'-0"

NOT FOR CONSTRUCTION

REV.	DATE	DESCRIPTION
5	03/02/15	ISSUED FOR 90% REVIEW
4	02/23/15	ISSUED FOR 90% COST ESTIMATE
3	01/26/15	ISSUED FOR 60% REVIEW
2	01/16/15	ISSUED FOR PRICING
1	12/23/14	SCHEMATIC DESIGN

REVISIONS

HOLABIRD & ROOT
140 South Dearborn Chicago, IL 60603
Tel: 312 357 1771 Fax: 312 357 1909
www.holabird.com

	FERMI LAB	DATE
DESIGNED	M.BLEWITT	03/02/2015
DRAWN	M.BLEWITT	03/02/2015
CHECKED	G.GRUNLOH	
APPROVED		
SUBMITTED		

PROJECT NORTH

SCALE: 1/8"=1'-0"

FERMI NATIONAL ACCELERATOR LABORATORY
UNITED STATES DEPARTMENT OF ENERGY

SBN FAR DETECTOR BUILDING
MAIN LEVEL PLAN

DRAWING NO. 6-7-93 A-3 REV. 5

02 MAR. 2015

C:\Users\Matt_Bl\Desktop\Revit Locals\15592_SBN_Far_Detector_blewittm.rvt

3/2/2015 6:46:46 PM

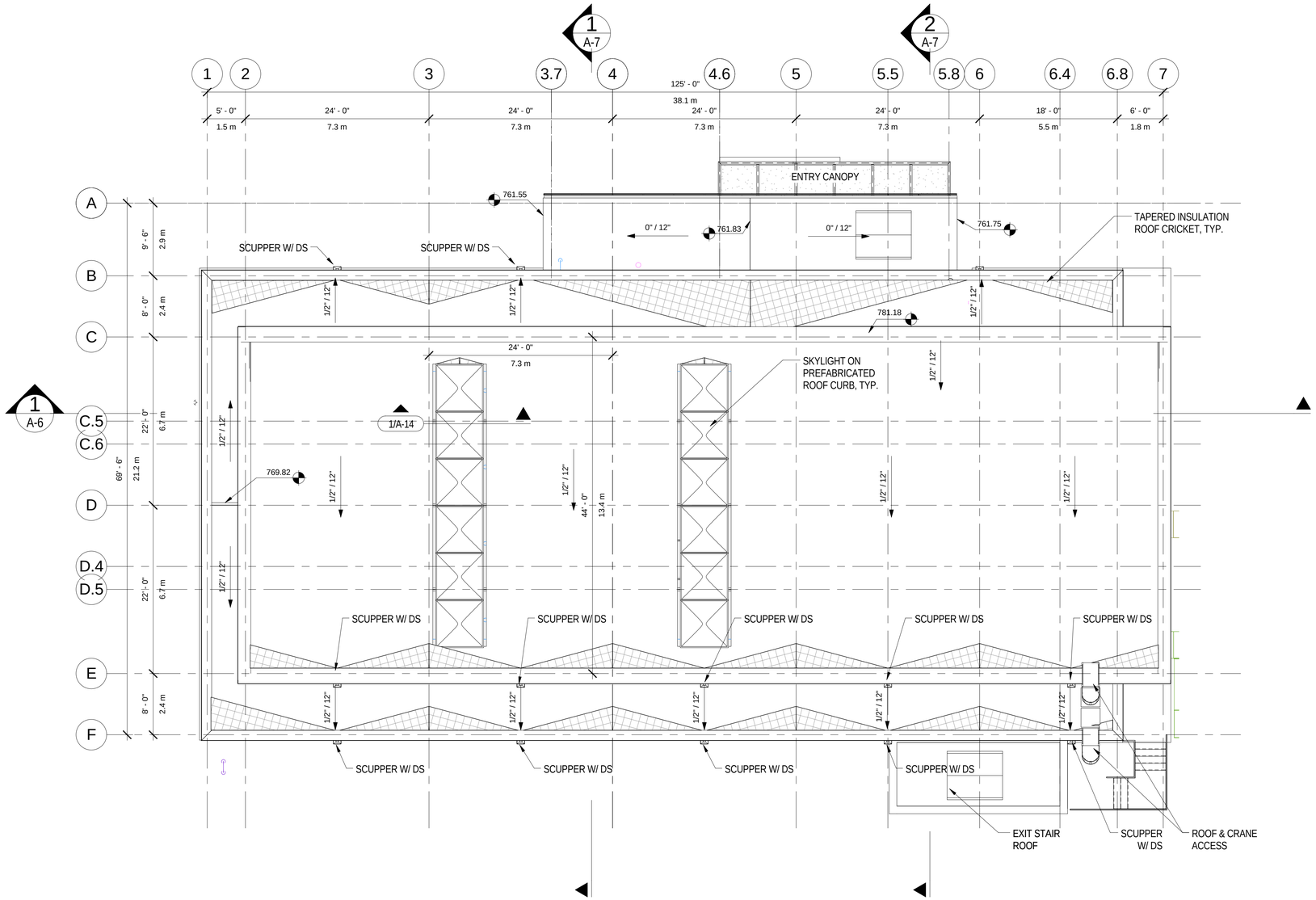

ROOF PLAN

SCALE: 1/8" = 1'-0"

NOT FOR CONSTRUCTION

C:\Users\Matt_B\Desktop\Revit Locals\155592_SBN_Far_Detector_blewittm.rvt

3/2/2015 6:46:48 PM

REV.	DATE	DESCRIPTION
5	03/02/15	ISSUED FOR 90% REVIEW
4	02/23/15	ISSUED FOR 90% COST ESTIMATE
3	01/26/15	ISSUED FOR 60% REVIEW
2	01/16/15	ISSUED FOR PRICING
1	12/23/14	SCHEMATIC DESIGN

REVISIONS

HOLABIRD & ROOT
140 South Dearborn Chicago, IL 60603
Tel: 312 357 1771 Fax: 312 357 1909
www.holabird.com

	FERMI LAB	DATE
DESIGNED	M.BLEWITT	
DRAWN	M.BLEWITT	03/02/2015
CHECKED	G.GRUNLOH	
APPROVED		
SUBMITTED		

S W E PROJECT NORTH

SCALE:
1/8" = 1'-0"
8 0 8 16
SCALE FEET

FERMI NATIONAL ACCELERATOR LABORATORY
UNITED STATES DEPARTMENT OF ENERGY

SBN FAR DETECTOR BUILDING
ROOF PLAN

DRAWING NO. **6-7-93** **A-4** REV. **5**

02 MAR. 2015

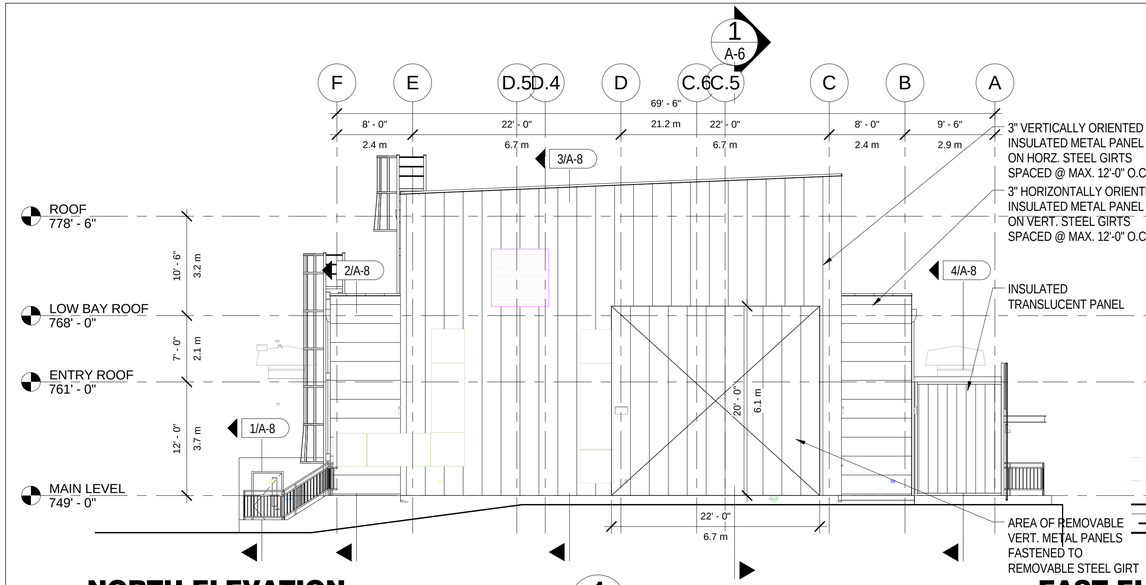

NORTH ELEVATION

SCALE: 1/8" = 1'-0"

1

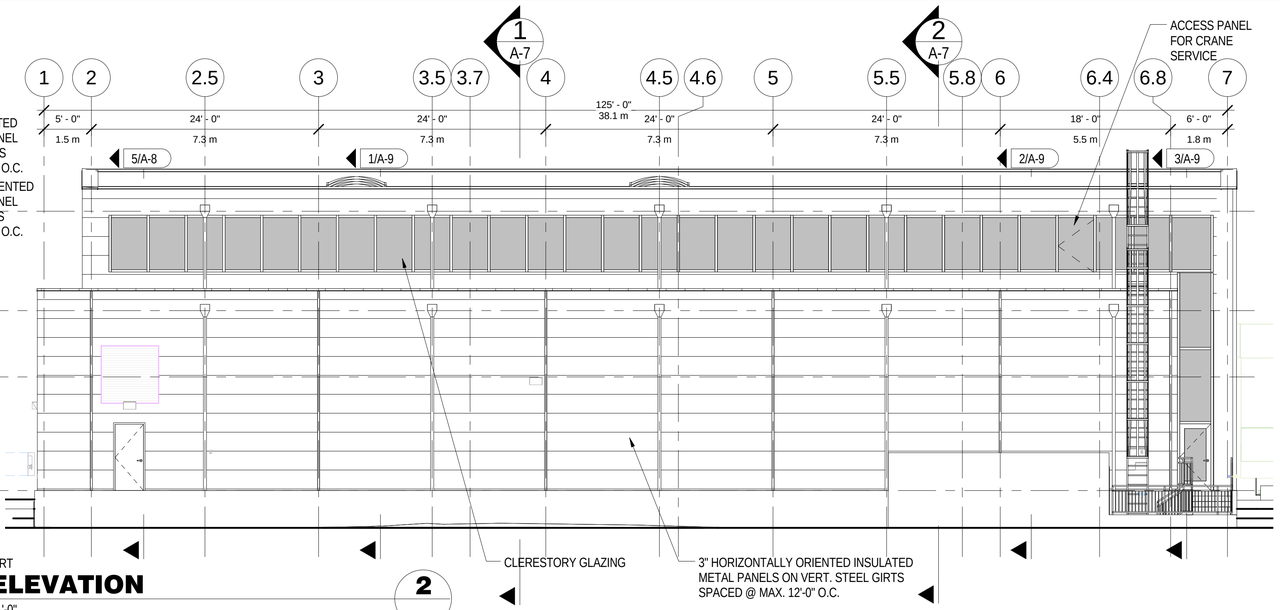

EAST ELEVATION

SCALE: 1/8" = 1'-0"

2

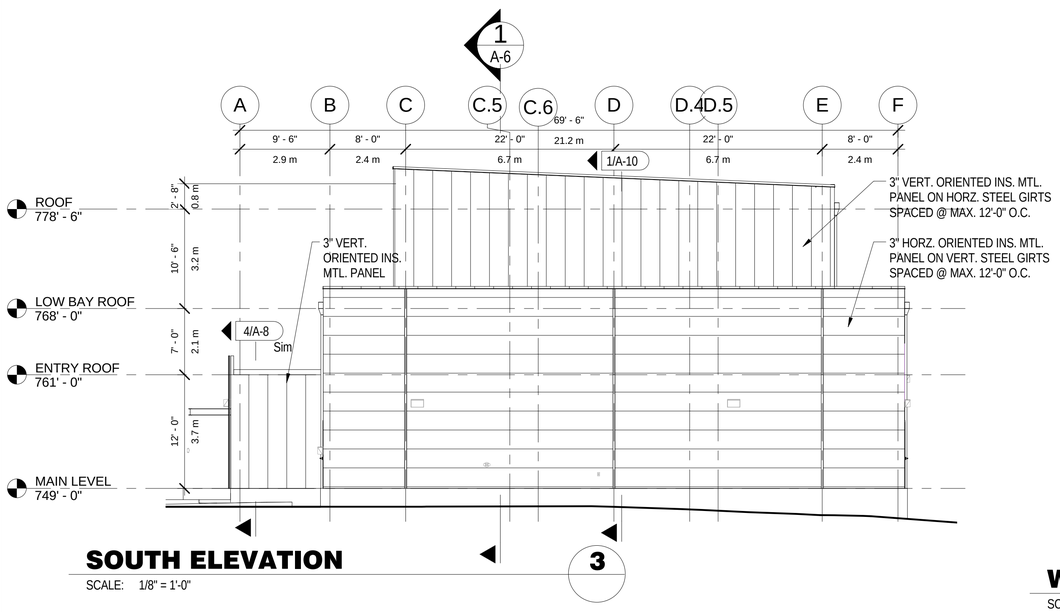

SOUTH ELEVATION

SCALE: 1/8" = 1'-0"

3

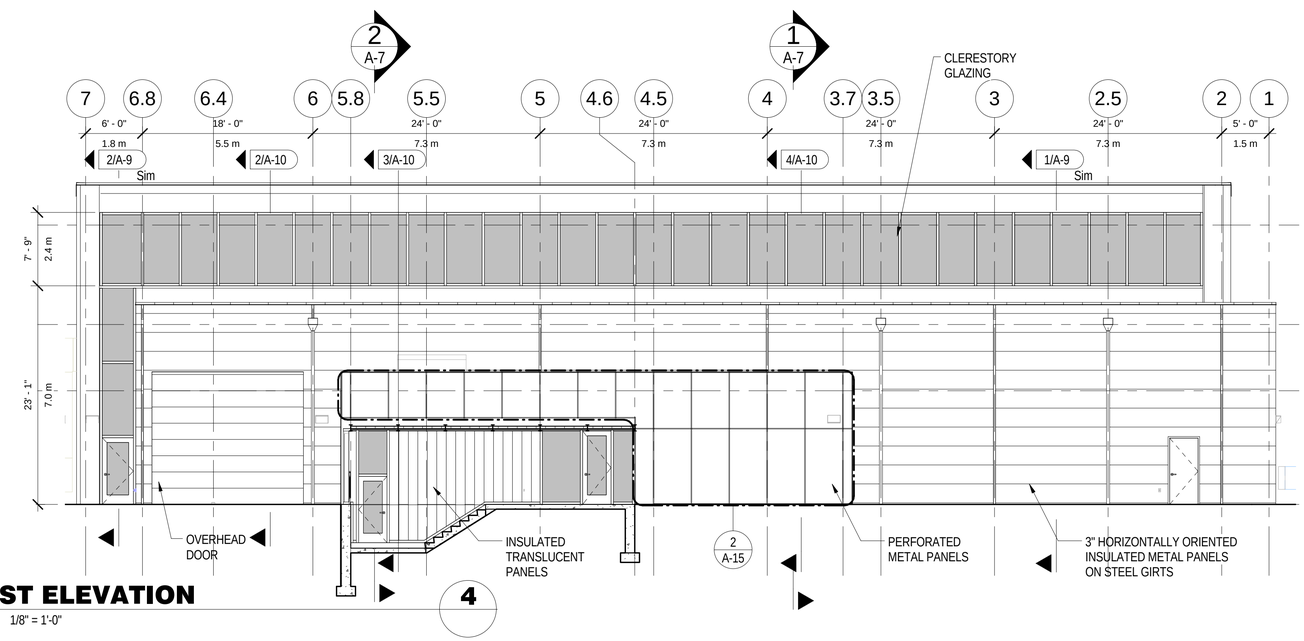

WEST ELEVATION

SCALE: 1/8" = 1'-0"

4

NOT FOR CONSTRUCTION

C:\Users\Matt_Bl\Desktop\Revit Locals\135592_SBN_Far_Detector_blewittm.rvt

3/2/2015 6:46:56 PM

REV.	DATE	DESCRIPTION
5	03/02/15	ISSUED FOR 90% REVIEW
4	02/23/15	ISSUED FOR 90% COST ESTIMATE
3	01/26/15	ISSUED FOR 60% REVIEW
2	01/16/15	ISSUED FOR PRICING
1	12/23/14	SCHEMATIC DESIGN

REVISIONS

HOLABIRD & ROOT

140 South Dearborn Chicago, IL 60603
Tel: 312 357 1771 Fax: 312 357 1909

www.holabird.com

FERMI LAB		DATE
DESIGNED	M.BLEWITT	
DRAWN	M.BLEWITT	03/02/2015
CHECKED	G.GRUNLOH	
APPROVED		
SUBMITTED		

SCALE:

1/8"=1'-0"

8 0 8 16
SCALE FEET

FERMI NATIONAL ACCELERATOR LABORATORY

UNITED STATES DEPARTMENT OF ENERGY

SBN FAR DETECTOR BUILDING

BUILDING ELEVATIONS

DRAWING NO. **6-7-93** **A-5** REV. **5**

02 MAR. 2015

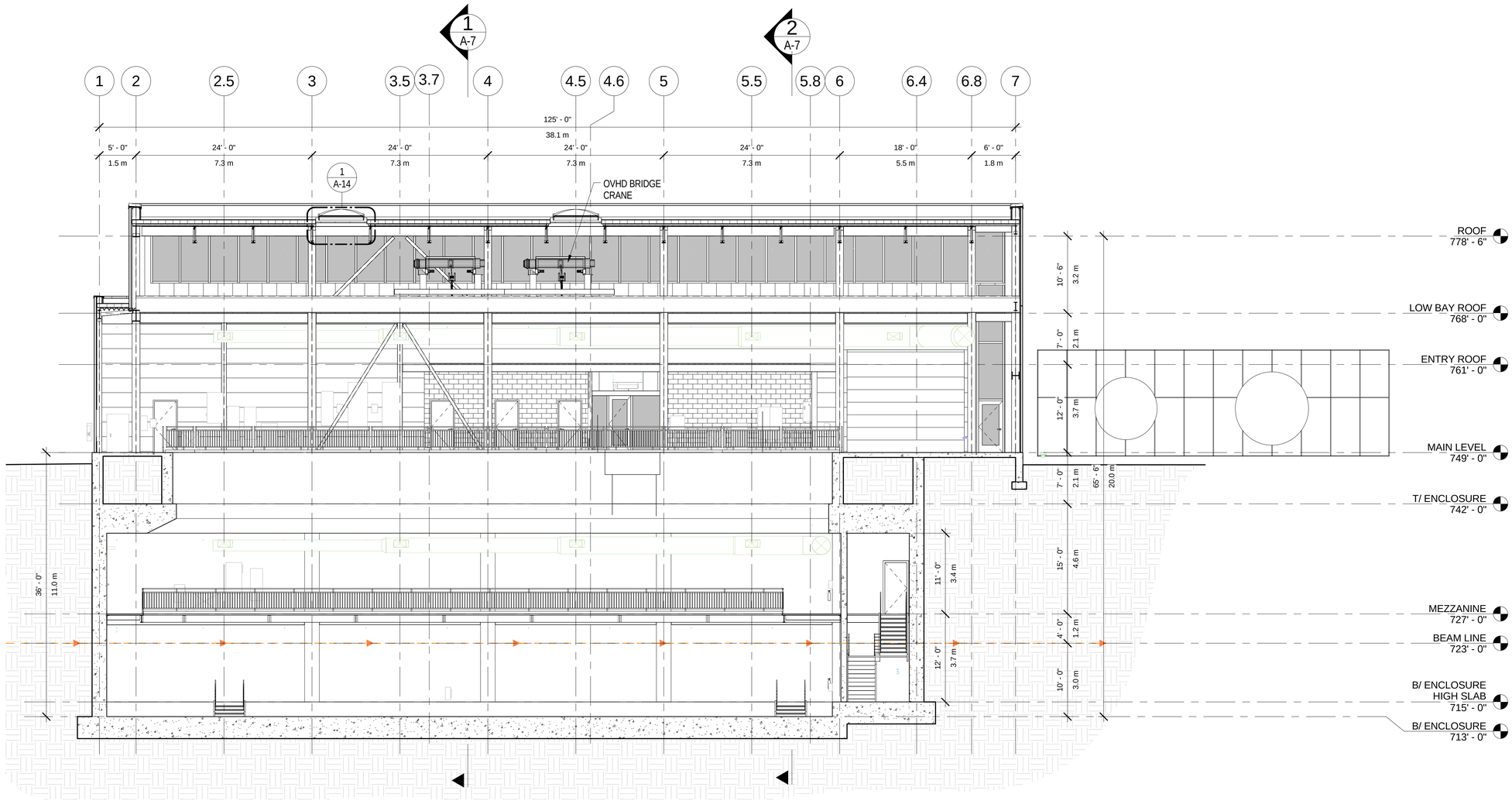

LONGITUDINAL SECTION

1

SCALE: 1/8" = 1'-0"

NOT FOR CONSTRUCTION

C:\Users\Matt_B\Desktop\Revit Locals\15592_SBN_Far_Detector_blewittm.rvt

3/2/2015 6:47:01 PM

REV.	DATE	DESCRIPTION
5	03/02/15	ISSUED FOR 90% REVIEW
4	02/23/15	ISSUED FOR 90% COST ESTIMATE
3	01/26/15	ISSUED FOR 60% REVIEW
2	01/16/15	ISSUED FOR PRICING
1	12/23/14	SCHEMATIC DESIGN

REVISIONS

HOLABIRD & ROOT

140 South Dearborn Chicago, IL 60603
Tel: 312 357 1771 Fax: 312 357 1909

www.holabird.com

FERMI LAB		DATE
DESIGNED	M.BLEWITT	
DRAWN	M.BLEWITT	03/02/2015
CHECKED	G.GRUNLOH	
APPROVED		
SUBMITTED		

SCALE:

1/8"=1'-0"

8 0 8 16
SCALE FEET

FERMI NATIONAL ACCELERATOR LABORATORY

UNITED STATES DEPARTMENT OF ENERGY

SBN FAR DETECTOR BUILDING

LONGITUDINAL SECTION

DRAWING NO. **6-7-93** **A-6** REV. **5**

02 MAR. 2015

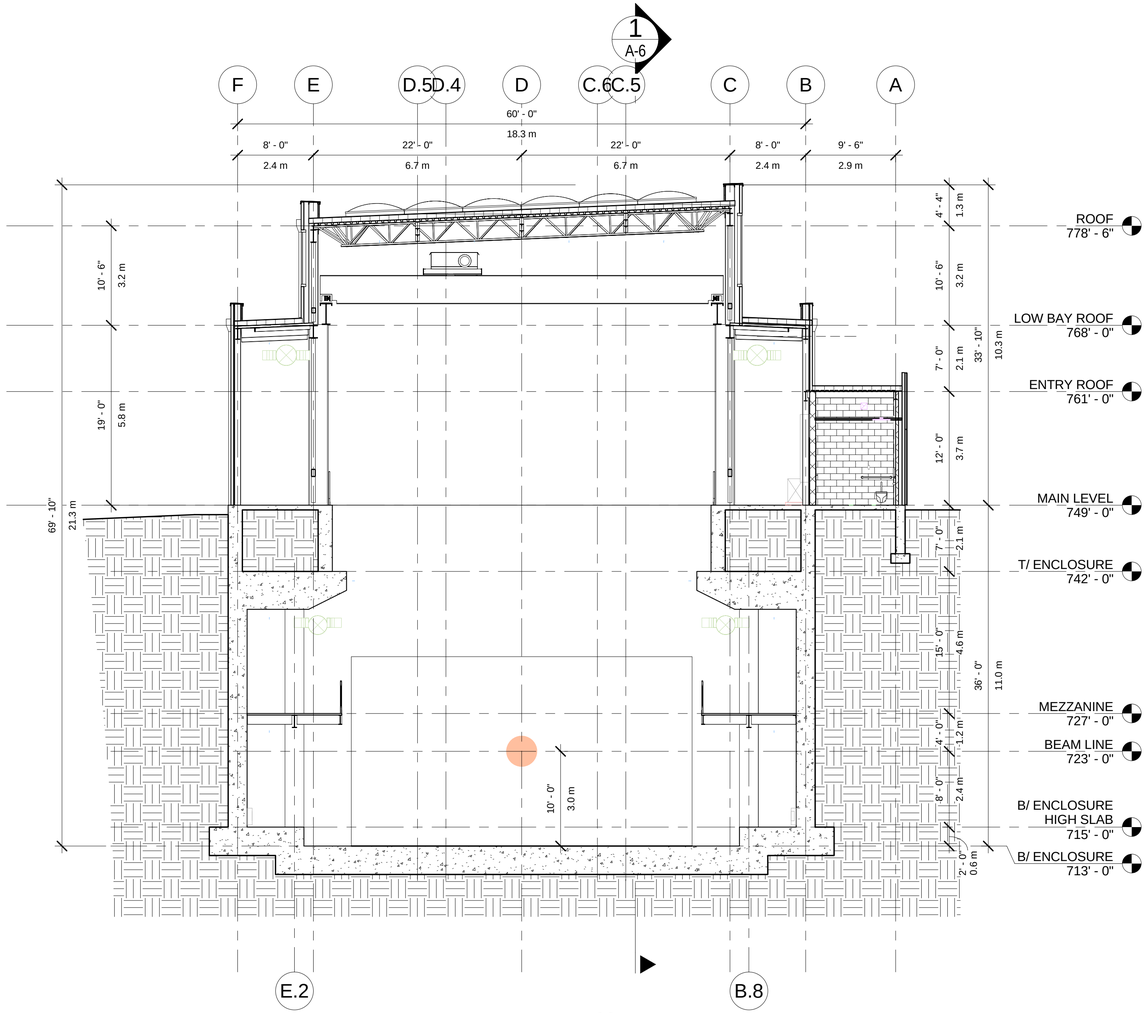

TRANSVERSE SECTION 1

SCALE: 1/8" = 1'-0"

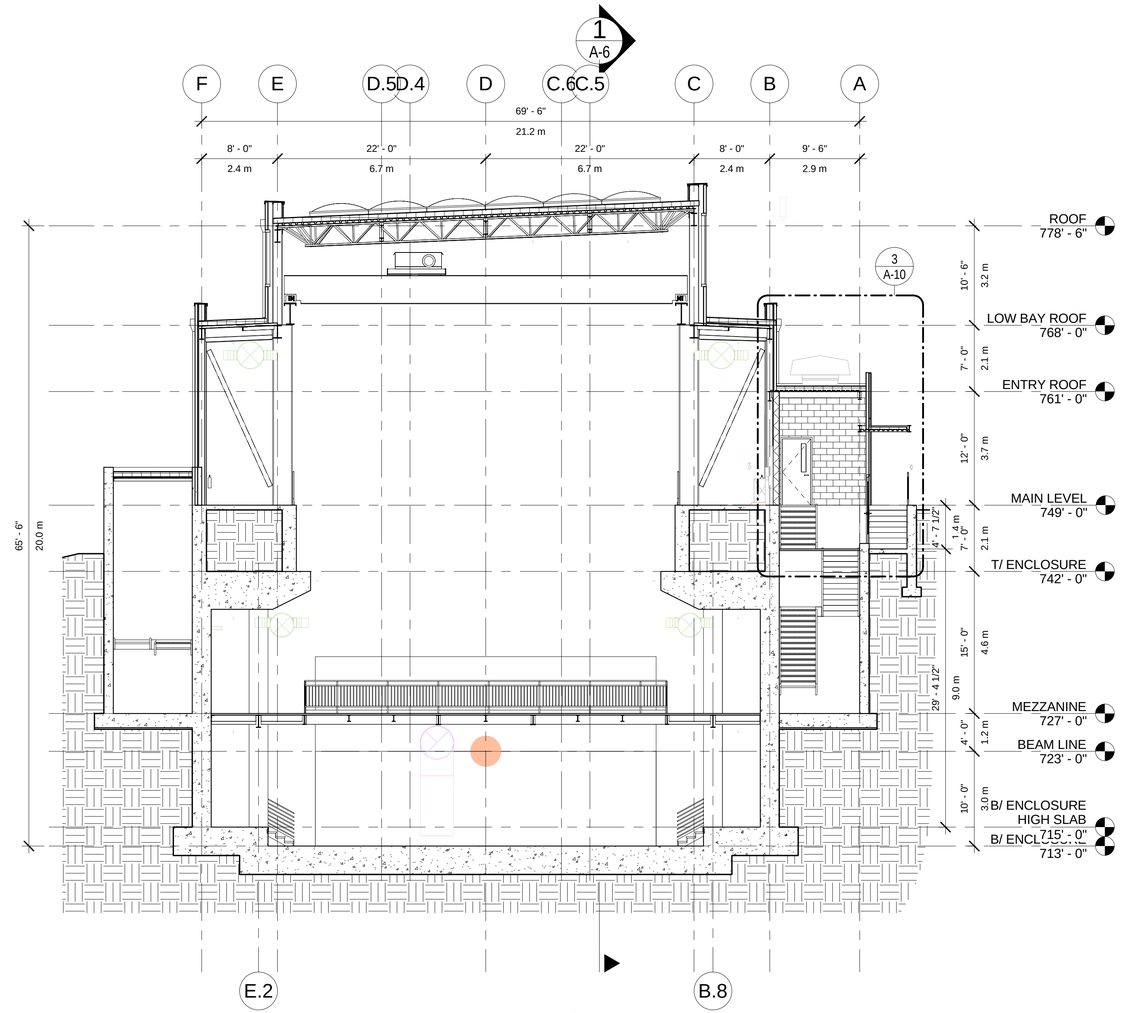

TRANS. SECTION AT EXIT 2

SCALE: 1/8" = 1'-0"

NOT FOR CONSTRUCTION

REV.	DATE	DESCRIPTION
5	03/02/15	ISSUED FOR 90% REVIEW
4	02/23/15	ISSUED FOR 90% COST ESTIMATE
3	01/26/15	ISSUED FOR 60% REVIEW
2	01/16/15	ISSUED FOR PRICING
1	12/23/14	SCHEMATIC DESIGN

REVISIONS

HOLABIRD & ROOT

140 South Dearborn Chicago, IL 60603
Tel: 312 357 1771 Fax: 312 357 1909

www.holabird.com

FERMI LAB		DATE
DESIGNED	M.BLEWITT	03/02/2015
DRAWN	M.BLEWITT	03/02/2015
CHECKED	G.GRUNLOH	03/02/2015
APPROVED		
SUBMITTED		

SCALE:

1/8"=1'-0"

8 0 8 16
SCALE FEET

FERMI NATIONAL ACCELERATOR LABORATORY

UNITED STATES DEPARTMENT OF ENERGY

SBN FAR DETECTOR BUILDING

TRANSVERSE SECTIONS

DRAWING NO. **6-7-93** **A-7** REV. **5**

02 MAR. 2015

C:\Users\Matt_Bl\Desktop\Revit Locals\155592_SBN_Far_Detector_blewittm.rvt

3/2/2015 6:47:07 PM

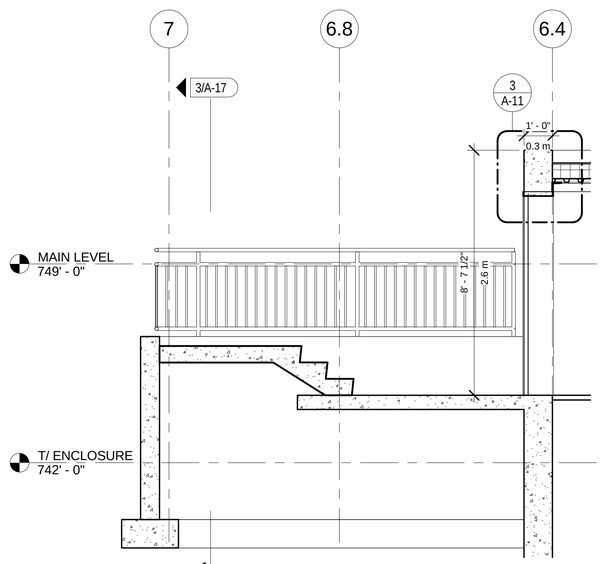

WALL SECTION - NORTH - 1 (1)

SCALE: 3/8" = 1'-0" [REF: 1/ A-5]

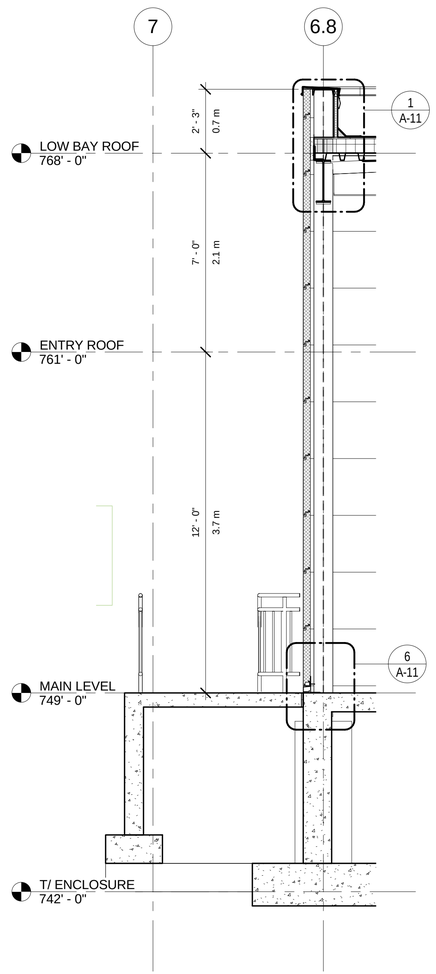

WALL SECTION - NORTH - 2 (2)

SCALE: 3/8" = 1'-0" [REF: 1/ A-5]

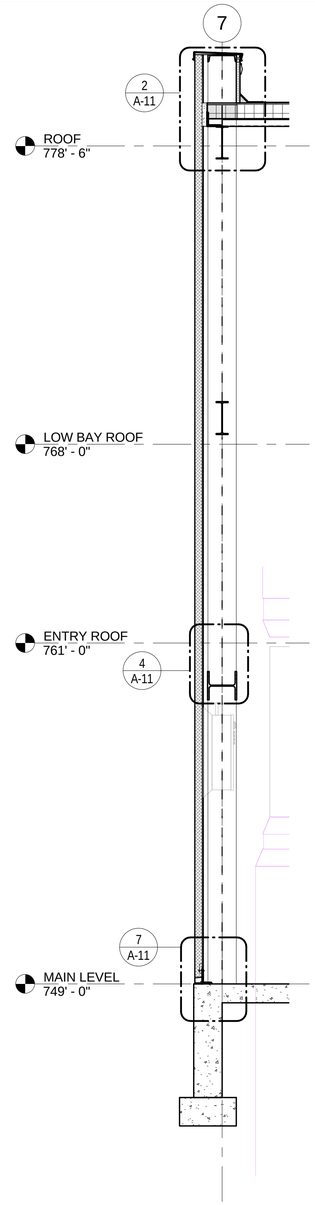

WALL SECTION - NORTH - 3 (3)

SCALE: 3/8" = 1'-0" [REF: 1/ A-5]

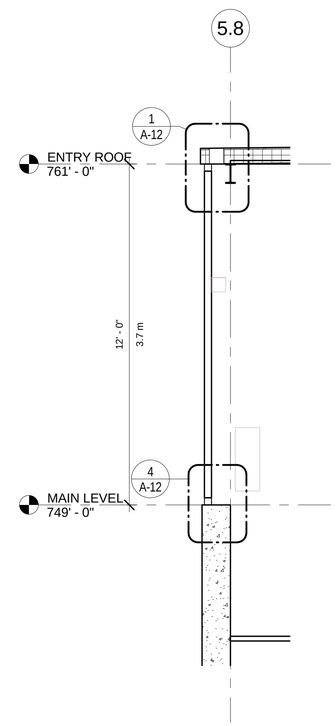

WALL SECTION - NORTH - 4 (4)

SCALE: 3/8" = 1'-0" [REF: 1/ A-5]

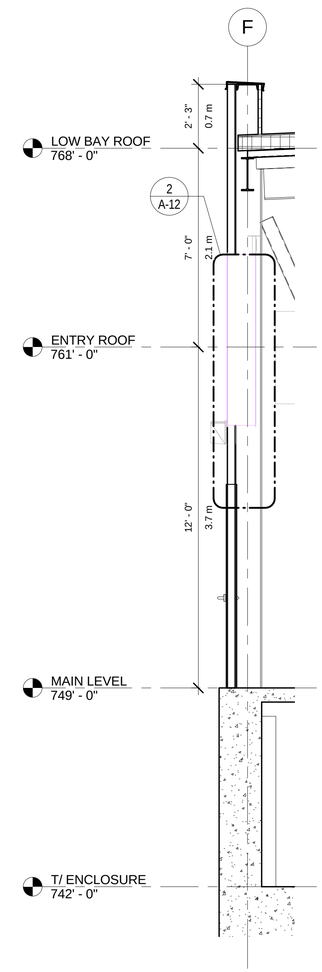

WALL SECTION - EAST - 1 (5)

SCALE: 3/8" = 1'-0" [REF: 2/ A-5]

NOT FOR CONSTRUCTION

REV.	DATE	DESCRIPTION
5	03/02/15	ISSUED FOR 90% REVIEW
4	02/23/15	ISSUED FOR 90% COST ESTIMATE
3	01/26/15	ISSUED FOR 60% REVIEW

REVISIONS

HOLABIRD & ROOT
140 South Dearborn Chicago, IL 60603
Tel: 312 357 1771 Fax: 312 357 1909
www.holabird.com

FERMI LAB		DATE
DESIGNED	M.BLEWITT	
DRAWN	M.BLEWITT	03/02/2015
CHECKED	G.GRUNLOH	
APPROVED		
SUBMITTED		

SCALE:
3/8"=1'-0"
1 0 1 2 3 4 5 6 7
SCALE FEET

FERMI NATIONAL ACCELERATOR LABORATORY
UNITED STATES DEPARTMENT OF ENERGY

SBN FAR DETECTOR BUILDING
WALL SECTIONS - 1

DRAWING NO. **6-7-93** **A-8** REV. **5**

02 MAR. 2015

C:\Users\Matt_B\Desktop\Revit Locals\15592_SBN_Far_Detector_blewittm.rvt
3/2/2015 6:47:12 PM

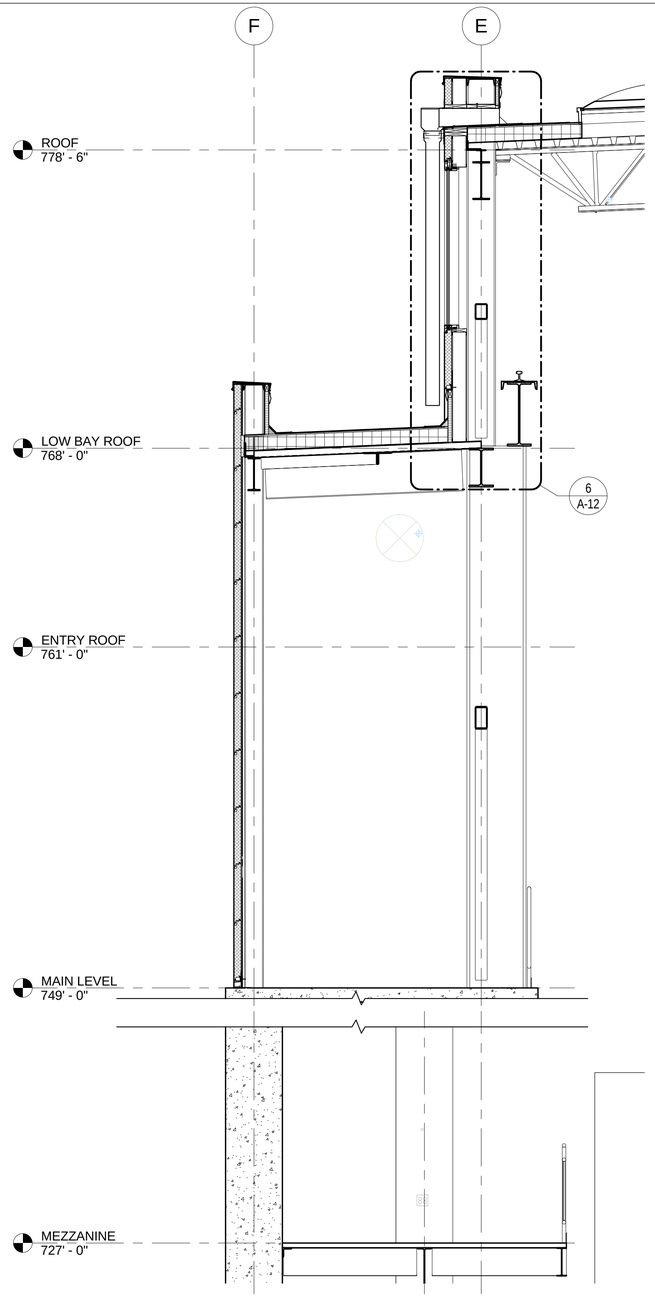

WALL SECTION - EAST - 2 (1)

SCALE: 3/8" = 1'-0" [REF: 2/ A-5]

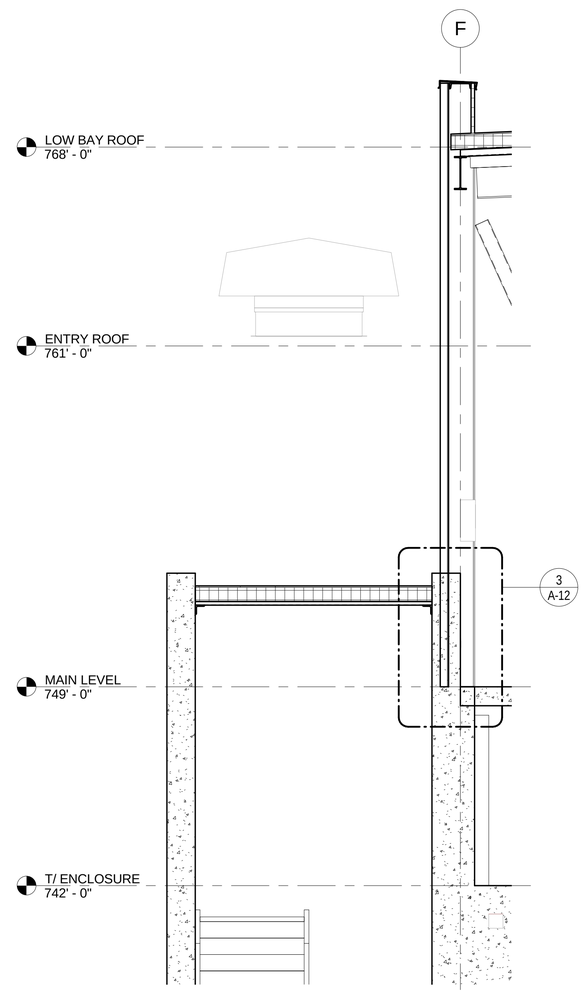

WALL SECTION - EAST - 3 (2)

SCALE: 3/8" = 1'-0" [REF: 2/ A-5]

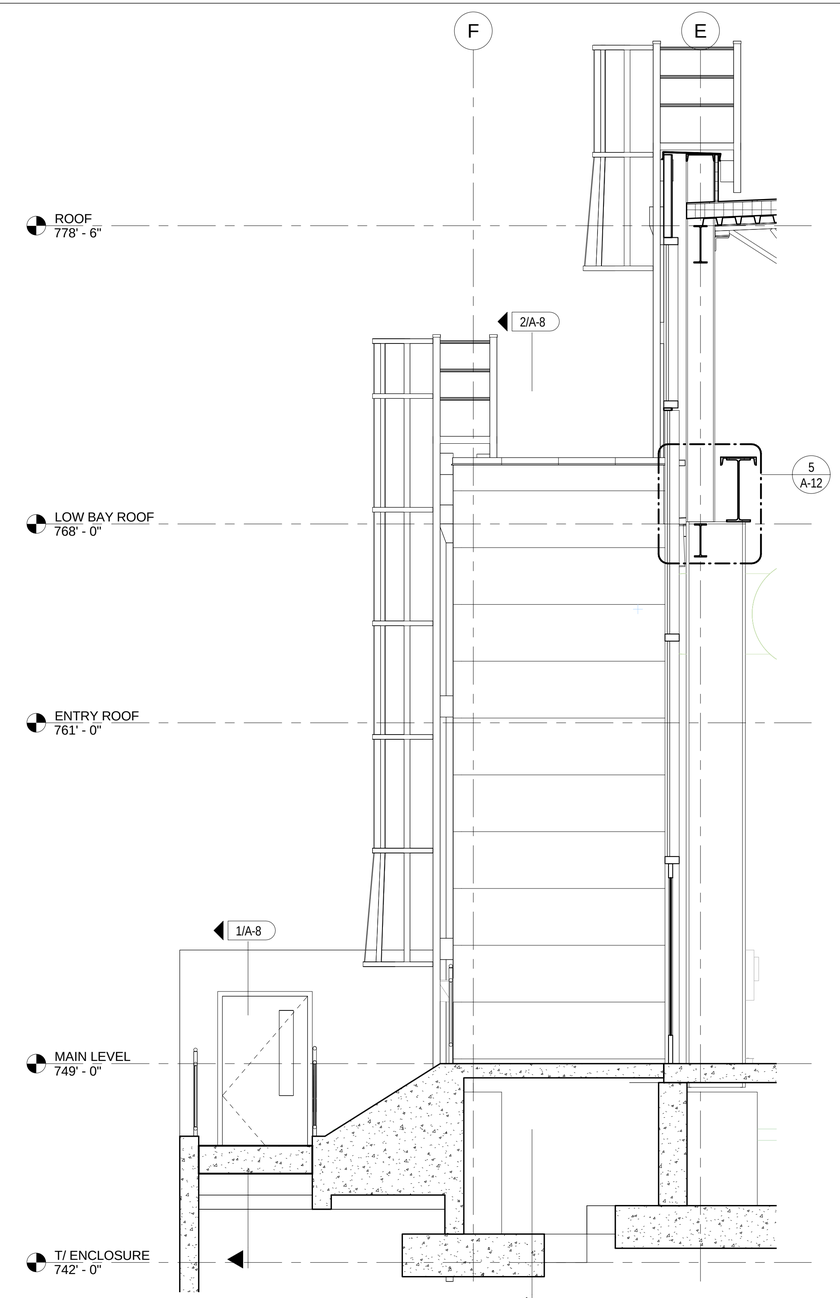

WALL SECTION - EAST - 4 (3)

SCALE: 3/8" = 1'-0" [REF: 2/ A-5]

NOT FOR CONSTRUCTION

REV.	DATE	DESCRIPTION
5	03/02/15	ISSUED FOR 90% REVIEW
4	02/23/15	ISSUED FOR 90% COST ESTIMATE
3	01/26/15	ISSUED FOR 60% REVIEW

REVISIONS

HOLABIRD & ROOT

140 South Dearborn Chicago, IL 60603
Tel: 312 357 1771 Fax: 312 357 1909

www.holabird.com

	FERMI LAB	DATE
DESIGNED	M.BLEWITT	
DRAWN	M.BLEWITT	03/02/2015
CHECKED	G.GRUNLOH	
APPROVED		
SUBMITTED		

SCALE:

3/8"=1'-0" 1 0 1 2 3 4 5 6 7 SCALE FEET

FERMI NATIONAL ACCELERATOR LABORATORY

UNITED STATES DEPARTMENT OF ENERGY

SBN FAR DETECTOR BUILDING

WALL SECTIONS - 2

DRAWING NO. 6-7-93 A-9 REV. 5

02 MAR. 2015

C:\Users\Matt_Bl\Desktop\Revit Locals\15592_SBN_Far_Detector_blewittm.rvt

3/2/2015 6:47:17 PM

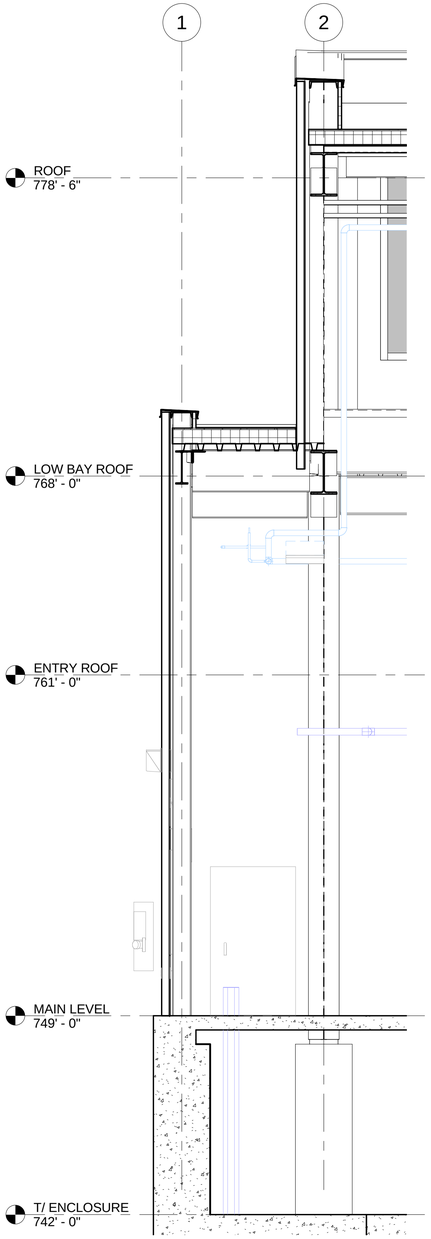

WALL SECTION - SOUTH -1 (1)

SCALE: 3/8" = 1'-0" [REF: 3/ A-5]

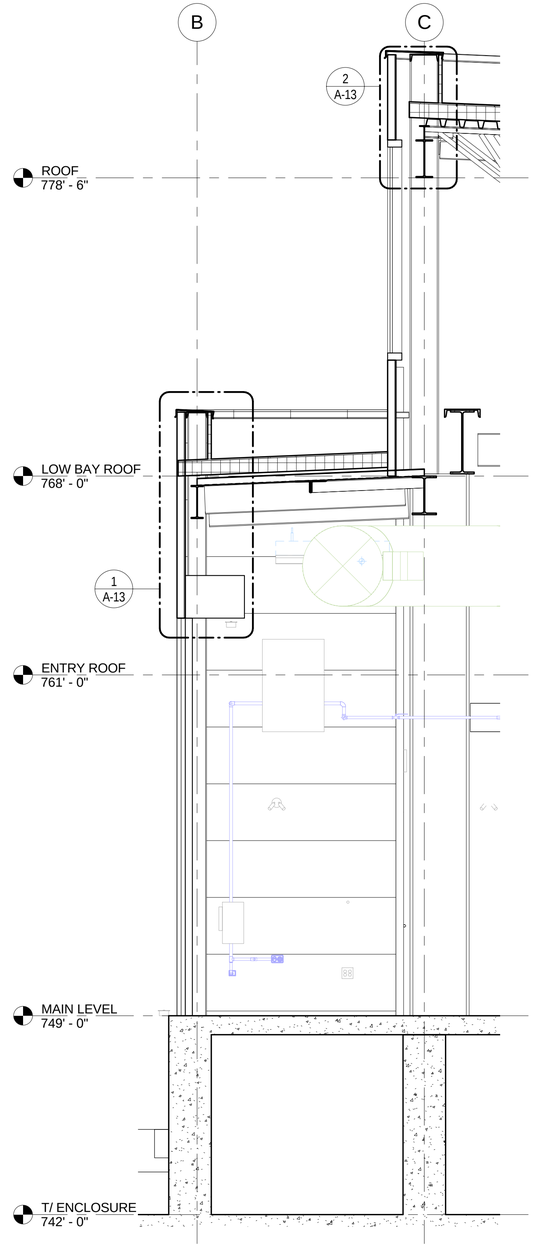

WALL SECTION - WEST - 1 (2)

SCALE: 3/8" = 1'-0" [REF: 4/ A-5]

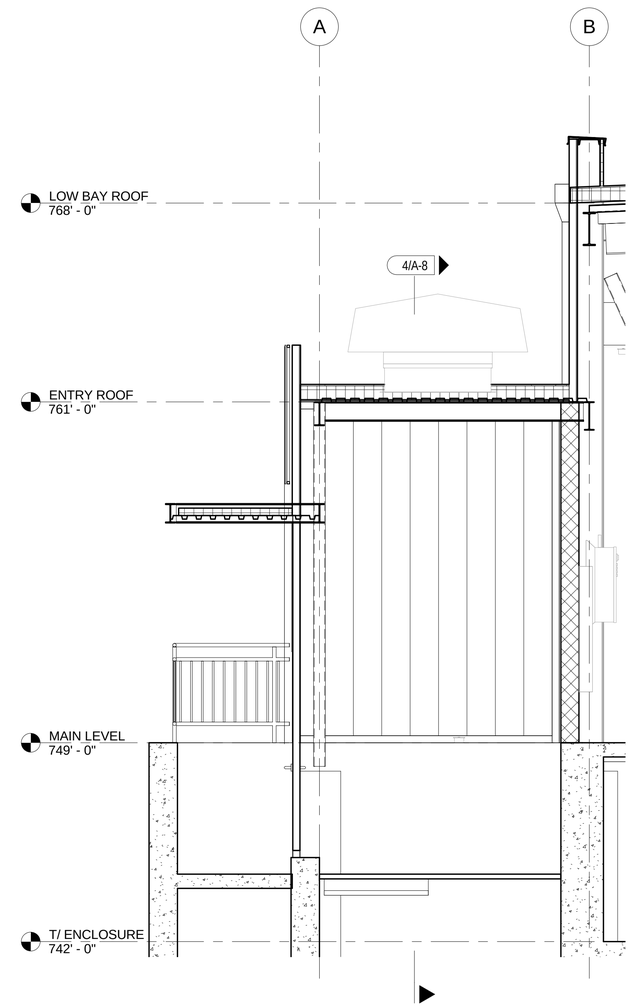

WALL SECTION - WEST - 2 (3)

SCALE: 3/8" = 1'-0" [REF: 4/ A-5]

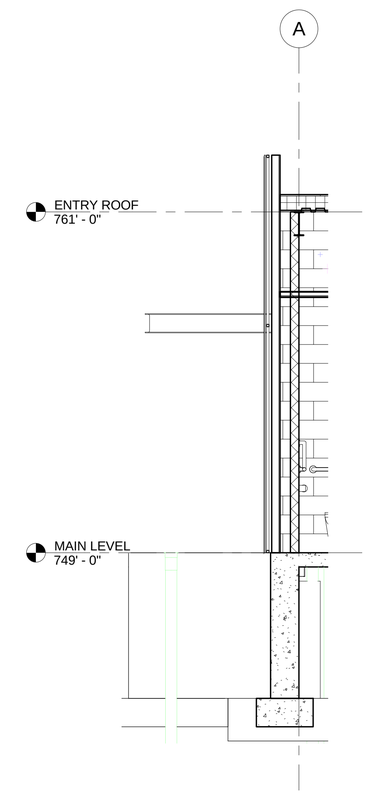

WALL SECTION - WEST - 3 (4)

SCALE: 3/8" = 1'-0" [REF: 4/ A-5]

NOT FOR CONSTRUCTION

REV.	DATE	DESCRIPTION
5	03/02/15	ISSUED FOR 90% REVIEW
4	02/23/15	ISSUED FOR 90% COST ESTIMATE
3	01/26/15	ISSUED FOR 60% REVIEW

REVISIONS

HOLABIRD & ROOT
140 South Dearborn Chicago, IL 60603
Tel: 312 357 1771 Fax: 312 357 1909
www.holabird.com

	FERMI LAB	DATE
DESIGNED	M.BLEWITT	
DRAWN	M.BLEWITT	03/02/2015
CHECKED	G.GRUNLOH	
APPROVED		
SUBMITTED		

SCALE:

3/8"=1'-0" 1 0 1 2 3 4 5 6 7 SCALE FEET

FERMI NATIONAL ACCELERATOR LABORATORY

UNITED STATES DEPARTMENT OF ENERGY

SBN FAR DETECTOR BUILDING

WALL SECTIONS - 3

DRAWING NO. **6-7-93** **A-10** REV. **5**

02 MAR. 2015

C:\Users\Matt_Bl\Desktop\Revit Locals\15592_SBN_Far_Detector_blewittm.rvt

3/2/2015 6:47:20 PM

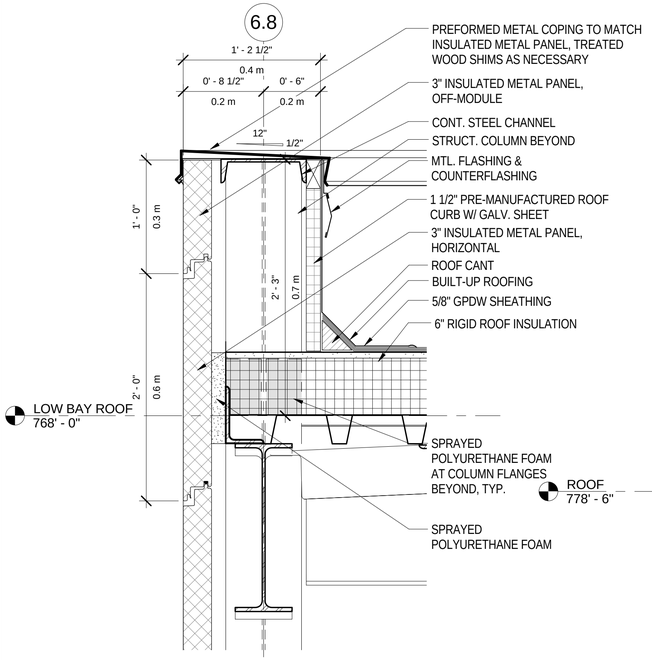

SECTION DETAIL - HORZ. METAL PANEL AT PARAPET (1)

SCALE: 1 1/2" = 1'-0" [REF: 2/ A-8]

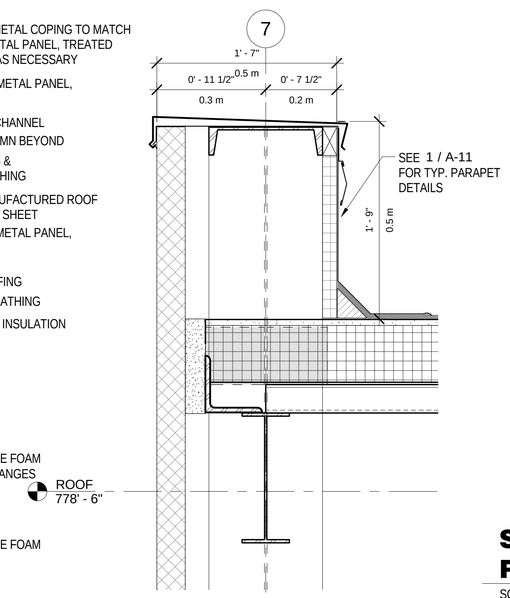

SECTION DETAIL - VERT. METAL PANEL AT PARAPET (2)

SCALE: 1 1/2" = 1'-0" [REF: 3/ A-8]

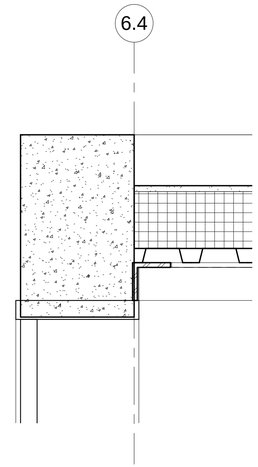

SECTION DETAIL - EXIT STAIR ROOF AT PARAPET (3)

SCALE: 1 1/2" = 1'-0" [REF: 1/ A-8]

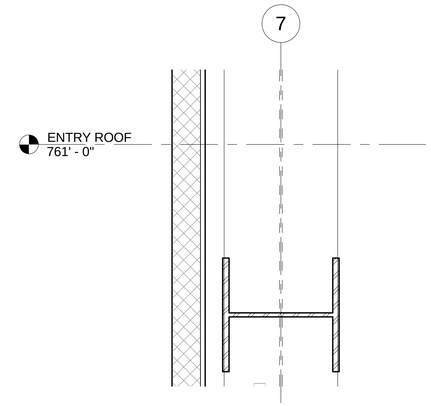

SECTION DETAIL - VERT. PANEL CONNECTION AT GIRT (4)

SCALE: 1 1/2" = 1'-0" [REF: 3/ A-8]

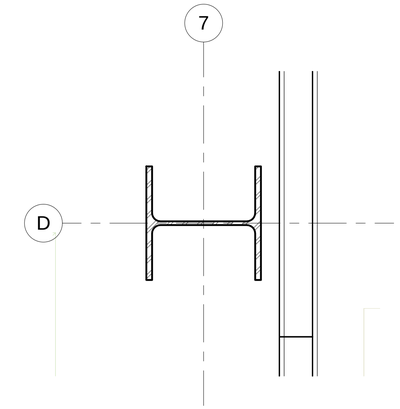

PLAN DETAIL - VERT. PANEL AT JOINT (5)

SCALE: 1 1/2" = 1'-0" [REF: 1/ A-3]

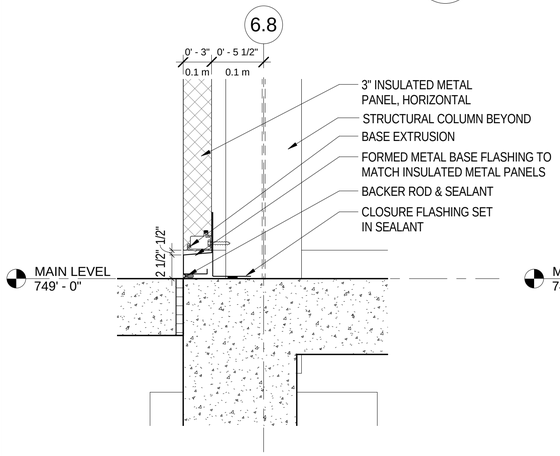

SECTION DETAIL - HORZ. METAL PANEL AT FOUNDATION (6)

SCALE: 1 1/2" = 1'-0" [REF: 2/ A-8]

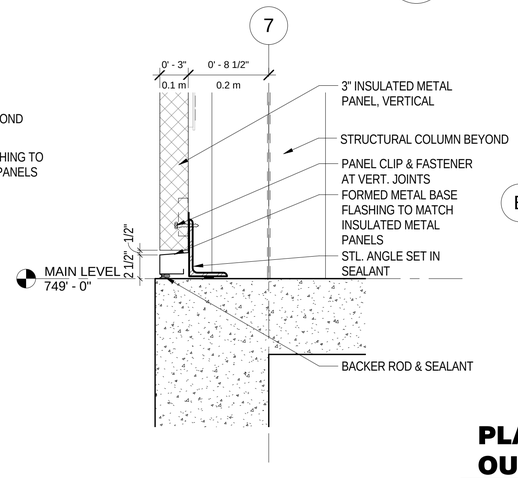

SECTION DETAIL - VERT. METAL PANEL AT FOUNDATION (7)

SCALE: 1 1/2" = 1'-0" [REF: 3/ A-8]

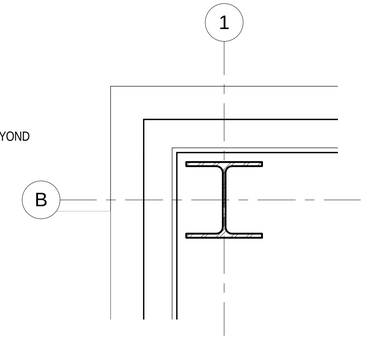

PLAN DETAIL - HORZ. PANEL AT OUTSIDE CORNER (8)

SCALE: 1 1/2" = 1'-0" [REF: 1/ A-3]

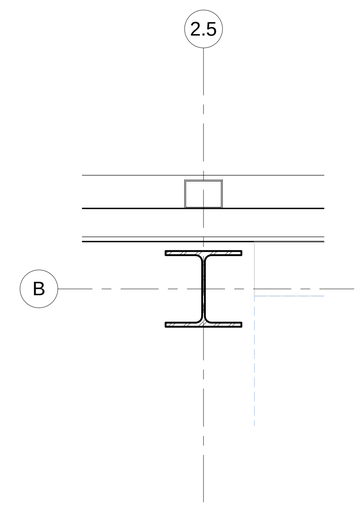

PLAN DETAIL - HORZ. PANEL CONNECTION AT GIRT (9)

SCALE: 1 1/2" = 1'-0" [REF: 1/ A-3]

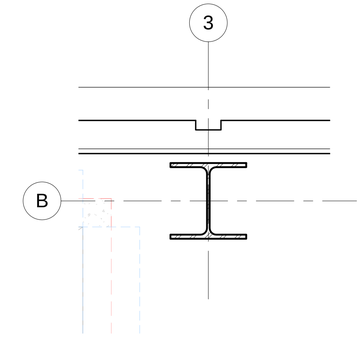

PLAN DETAIL - HORZ. PANEL AT END JOINT (10)

SCALE: 1 1/2" = 1'-0" [REF: 1/ A-3]

NOT FOR CONSTRUCTION

REV.	DATE	DESCRIPTION
5	03/02/15	ISSUED FOR 90% REVIEW
4	02/23/15	ISSUED FOR 90% COST ESTIMATE

REVISIONS

HOLABIRD & ROOT
140 South Dearborn Chicago, IL 60603
Tel: 312 357 1771 Fax: 312 357 1909
www.holabird.com

FERMI LAB		DATE
DESIGNED	M.BLEWITT	
DRAWN	M.BLEWITT	03/02/2015
CHECKED	G.GRUNLOH	
APPROVED		
SUBMITTED		

SCALE:
1 1/2"=1'-0" 1 0 1 SCALE FEET

FERMI NATIONAL ACCELERATOR LABORATORY
UNITED STATES DEPARTMENT OF ENERGY

SBN FAR DETECTOR BUILDING
EXTERIOR DETAILS - 1

DRAWING NO. 6-7-93 A-11 REV. 5

02 MAR. 2015

C:\Users\Matt_B\Desktop\Revit Locals\15592_SBN_Far_Detector_blewittm.rvt
3/2/2015 6:47:25 PM

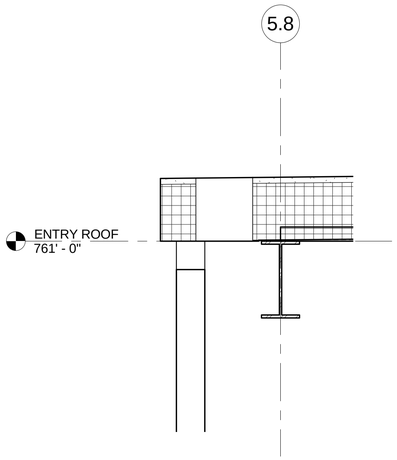

SECTION DETAIL - EXIT STAIR #1 AT PARAPET (1)

SCALE: 1 1/2" = 1'-0" [REF: 4/ A-8]

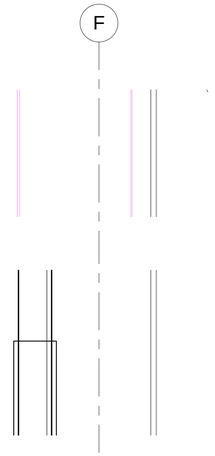

SECTION DETAIL - HORZ. METAL PANEL AT LOUVERS, TYP. (2)

SCALE: 1 1/2" = 1'-0" [REF: 5/ A-8]

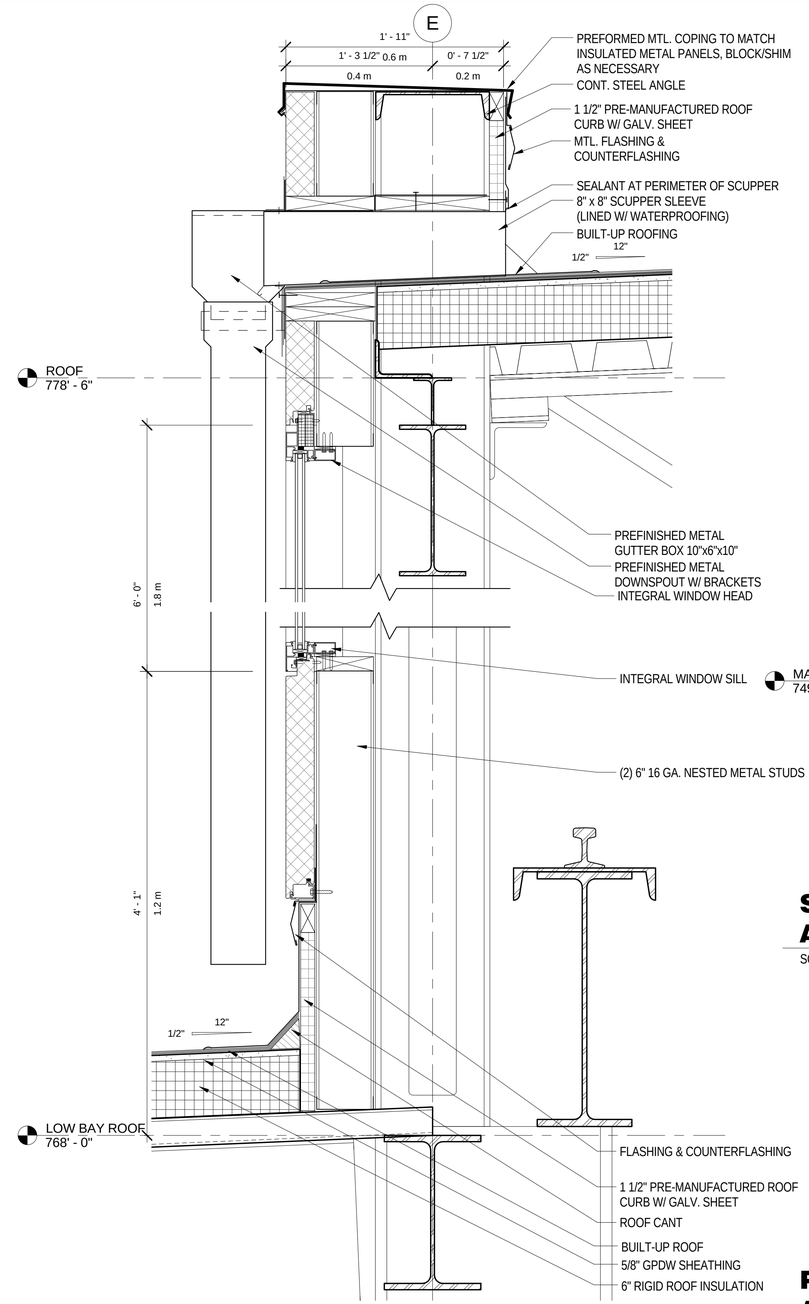

SECTION DETAIL - CLERESTORY WINDOW TYP. (6)

SCALE: 1 1/2" = 1'-0" [REF: 1/ A-9]

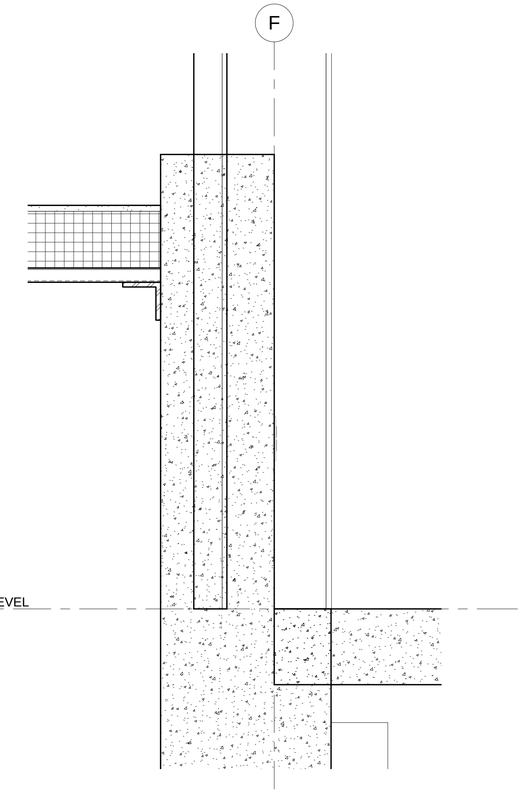

SECTION DETAIL - EXIT STAIR #2 AT FOUNDATION (3)

SCALE: 1 1/2" = 1'-0" [REF: 2/ A-9]

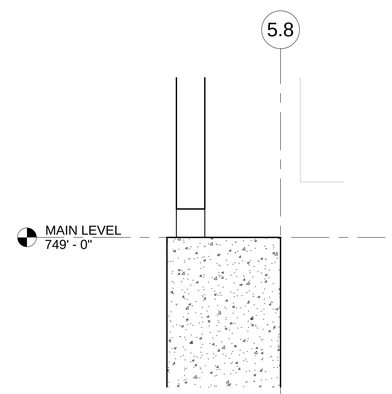

SECTION DETAIL - EXIT STAIR #1 AT FOUNDATION (4)

SCALE: 1 1/2" = 1'-0" [REF: 4/ A-8]

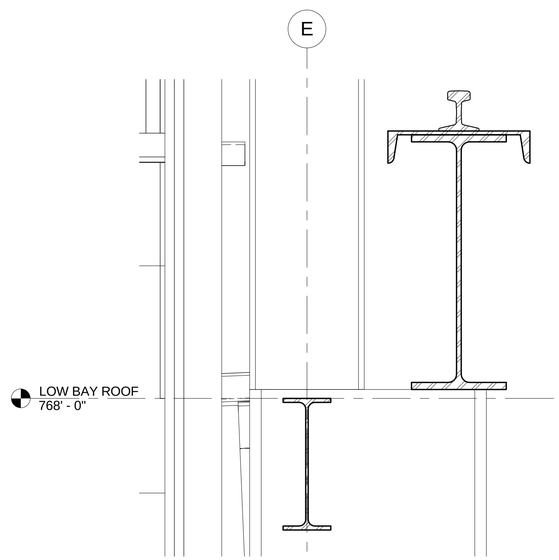

SECTION DETAIL - STOREFRONT TYP. (5)

SCALE: 1 1/2" = 1'-0" [REF: 3/ A-9]

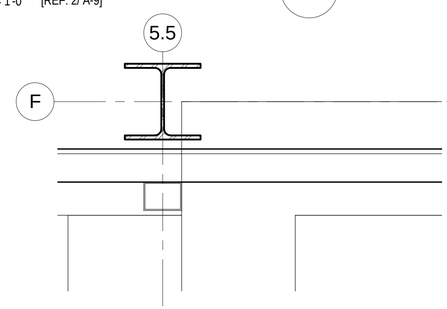

PLAN DETAIL - EXIT STAIR #2 AT INTERIOR CORNER (7)

SCALE: 1 1/2" = 1'-0" [REF: 1/ A-3]

NOT FOR CONSTRUCTION

REV.	DATE	DESCRIPTION
5	03/02/15	ISSUED FOR 90% REVIEW
4	02/23/15	ISSUED FOR 90% COST ESTIMATE

REVISIONS

HOLABIRD & ROOT
140 South Dearborn Chicago, IL 60603
Tel: 312 357 1771 Fax: 312 357 1909
www.holabird.com

FERMI LAB		DATE
DESIGNED	M.BLEWITT	
DRAWN	M.BLEWITT	03/02/2015
CHECKED	G.GRUNLOH	
APPROVED		
SUBMITTED		

SCALE:
1 1/2"=1'-0" 1 0 1 SCALE FEET

FERMI NATIONAL ACCELERATOR LABORATORY
UNITED STATES DEPARTMENT OF ENERGY

SBN FAR DETECTOR BUILDING
EXTERIOR DETAILS - 2

DRAWING NO. 6-7-93 A-12 REV. 5

02 MAR. 2015

C:\Users\Matt_B\Desktop\Revit Locals\15592_SBN_Far_Detector_blewittm.rvt
3/2/2015 6:47:30 PM

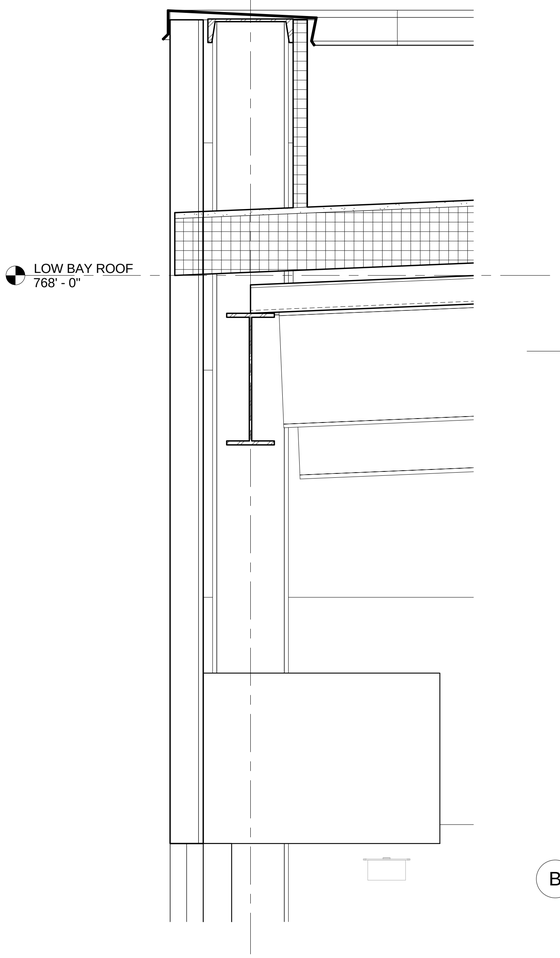

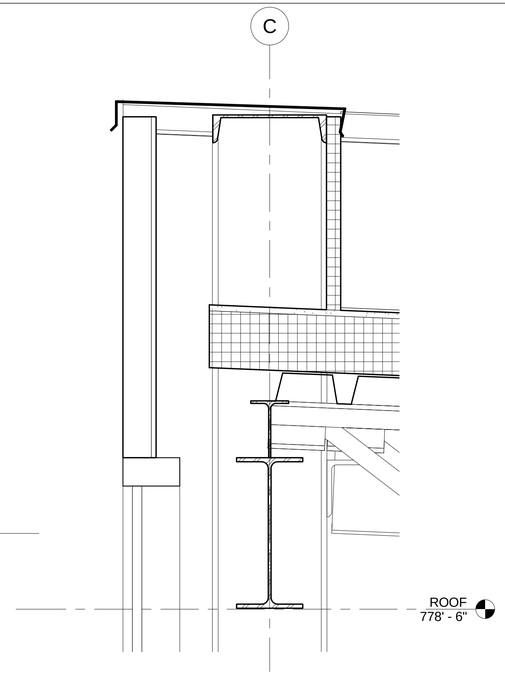

SECTION DETAIL - CLERESTORY AT PARAPET

2

SCALE: 1 1/2" = 1'-0" [REF: 2/ A-10]

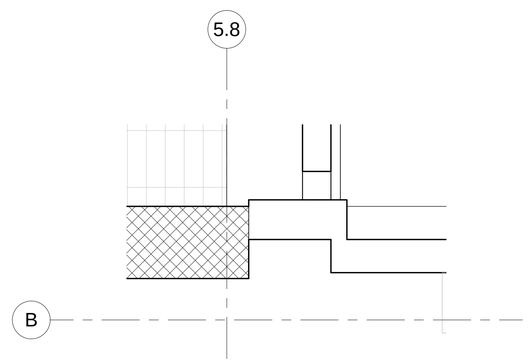

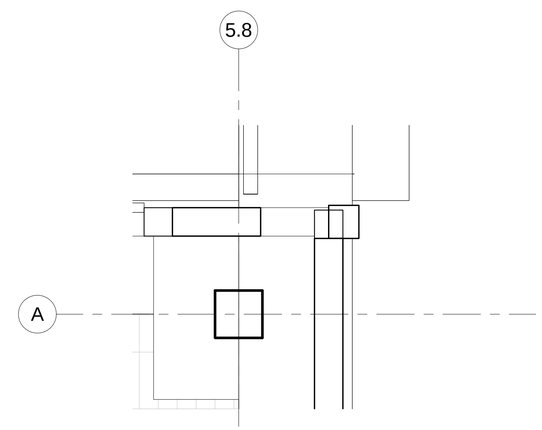

SECTION DETAIL - HORZ. METAL PANEL AT OVHD DOOR

1

SCALE: 1 1/2" = 1'-0" [REF: 2/ A-10]

PLAN DETAIL - TRANSLUCENT PANEL AT INTERIOR CORNER

4

SCALE: 1 1/2" = 1'-0" [REF: 1/ A-3]

PLAN DETAIL - TRANSLUCENT PANEL AT EXTERIOR CORNER

3

SCALE: 1 1/2" = 1'-0" [REF: 1/ A-3]

NOT FOR CONSTRUCTION

REV.	DATE	DESCRIPTION
5	03/02/15	ISSUED FOR 90% REVIEW
4	02/23/15	ISSUED FOR 90% COST ESTIMATE

REVISIONS

HOLABIRD & ROOT
140 South Dearborn Chicago, IL 60603
Tel: 312 357 1771 Fax: 312 357 1909
www.holabird.com

	FERMI LAB	DATE
DESIGNED	M.BLEWITT	
DRAWN	M.BLEWITT	03/02/2015
CHECKED	G.GRUNLOH	
APPROVED		
SUBMITTED		

SCALE:
1 1/2"=1'-0" 1 0 1 SCALE FEET

FERMI NATIONAL ACCELERATOR LABORATORY
UNITED STATES DEPARTMENT OF ENERGY

SBN FAR DETECTOR BUILDING
EXTERIOR DETAILS - 3

DRAWING NO. 6-7-93 A-13 REV. 5

02 MAR. 2015

C:\Users\Matt_Bl\Desktop\Revit Locals\15592_SBN_Far_Detector_blewittm.rvt
3/2/2015 6:47:32 PM

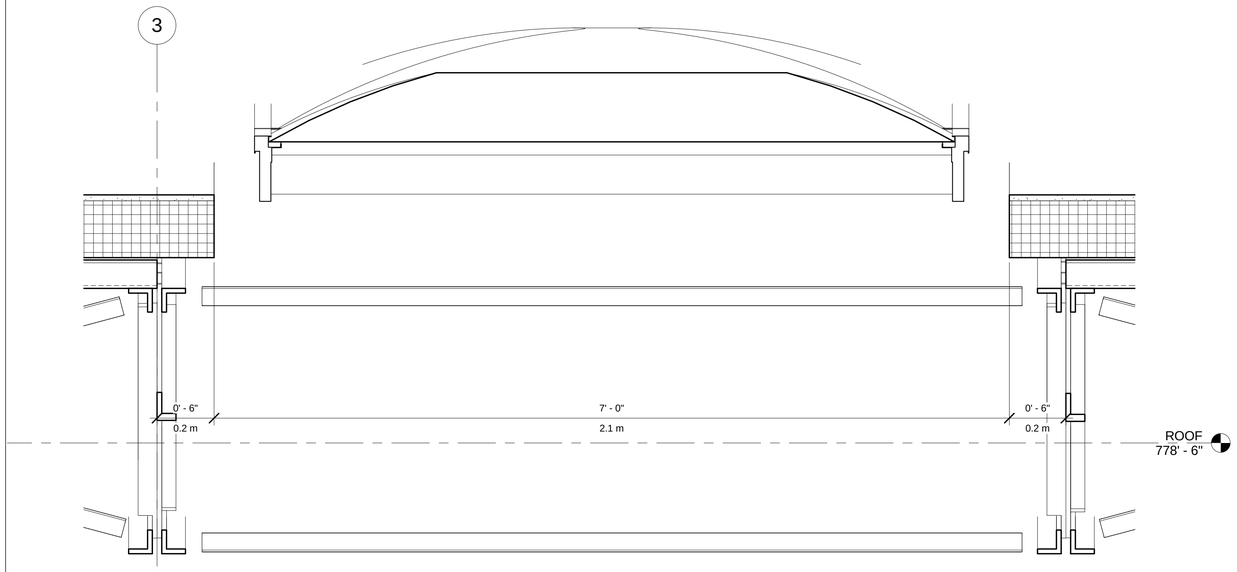

SECTION DETAIL - REMOVABLE SKYLIGHT

1

SCALE: 1 1/2" = 1'-0" [REF: 1/ A-4]

NOT FOR CONSTRUCTION

REV.	DATE	DESCRIPTION
5	03/02/15	ISSUED FOR 90% REVIEW
4	02/23/15	ISSUED FOR 90% COST ESTIMATE

REVISIONS

HOLABIRD & ROOT
140 South Dearborn Chicago, IL 60603
Tel: 312 357 1771 Fax: 312 357 1909
www.holabird.com

	FERMI LAB	DATE
DESIGNED	M.BLEWITT	
DRAWN	M.BLEWITT	03/02/2015
CHECKED	G.GRUNLOH	
APPROVED		
SUBMITTED		

SCALE:

FERMI NATIONAL ACCELERATOR LABORATORY
UNITED STATES DEPARTMENT OF ENERGY

SBN FAR DETECTOR BUILDING
ROOF & CANOPY DETAILS

DRAWING NO. 6-7-93 A-14 REV. 5

02 MAR. 2015

C:\Users\Matt_Bl\Desktop\Revit Locals\15592_SBN_Far_Detector_blewittm.rvt

3/2/2015 6:47:33 PM

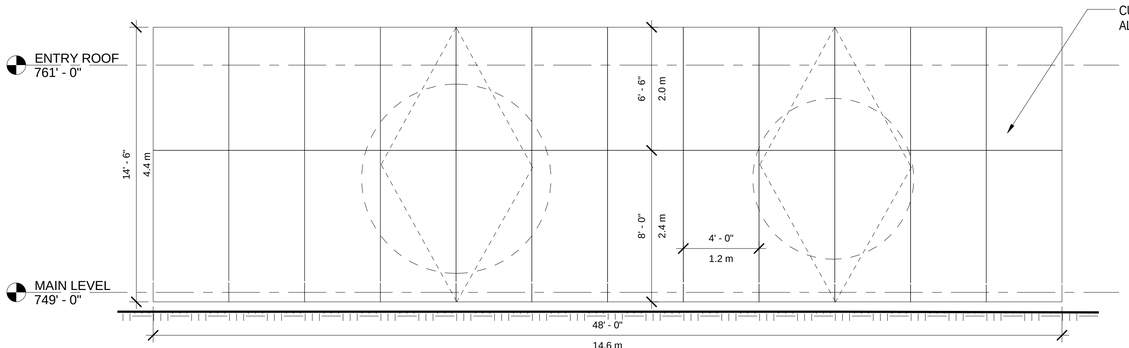

WEST ELEVATION - MECH. SCREEN 1

SCALE: 1/4" = 1'-0"

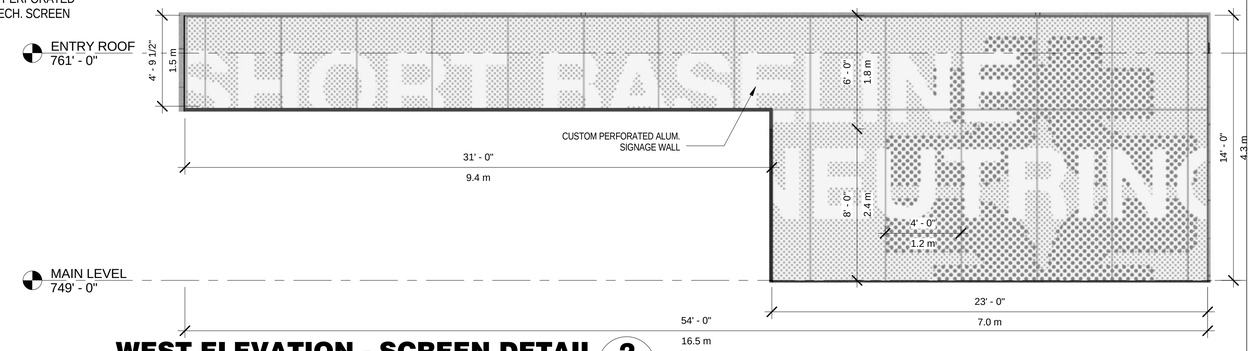

WEST ELEVATION - SCREEN DETAIL 2

SCALE: 1/4" = 1'-0"

NOT FOR CONSTRUCTION

REV.	DATE	DESCRIPTION
5	03/02/15	ISSUED FOR 90% REVIEW
4	02/23/15	ISSUED FOR 90% COST ESTIMATE

REVISIONS

HOLABIRD & ROOT
140 South Dearborn Chicago, IL 60603
Tel: 312 357 1771 Fax: 312 357 1909
www.holabird.com

	FERMI LAB	DATE
DESIGNED	M.BLEWITT	
DRAWN	M.BLEWITT	03/02/2015
CHECKED	G.GRUNLOH	
APPROVED		
SUBMITTED		

SCALE:

FERMI NATIONAL ACCELERATOR LABORATORY
UNITED STATES DEPARTMENT OF ENERGY

SBN FAR DETECTOR BUILDING
MECH. SCREEN AND ENTRY SCREEN
ENLARGED ELEVATIONS & DETAILS

DRAWING NO. 6-7-93 A-15 REV. 5

02 MAR. 2015

C:\Users\Matt_Bl\Desktop\Revit Locals\15592_SBN_Far_Detector_blewittm.rvt

3/2/2015 6:48:28 PM

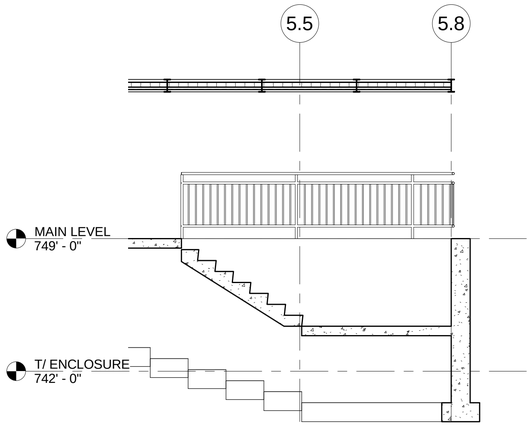

SECTION - STAIR #1 EXIT LANDING TO ENTRY 1

SCALE: 1/4" = 1'-0" [REF: 5/ A-16]

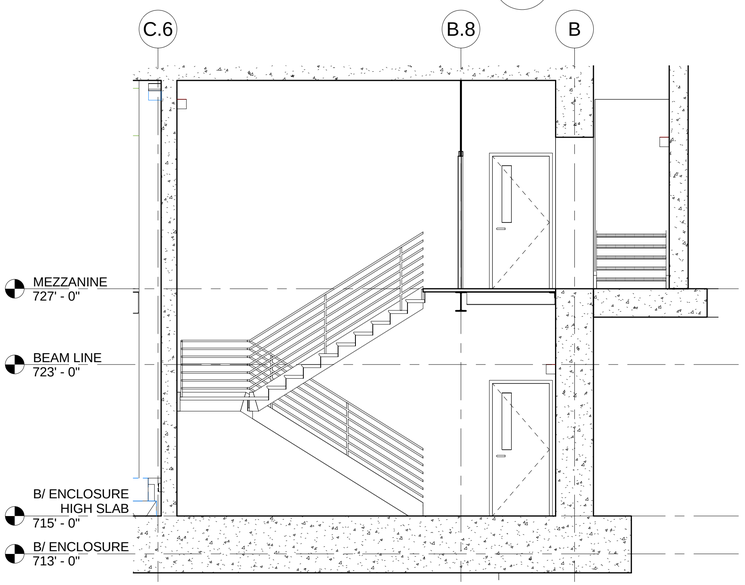

SECTION - STAIR #1 ENCLOSURE TO MEZZANINE LEVEL 2

SCALE: 1/4" = 1'-0" [REF: 4/ A-16]

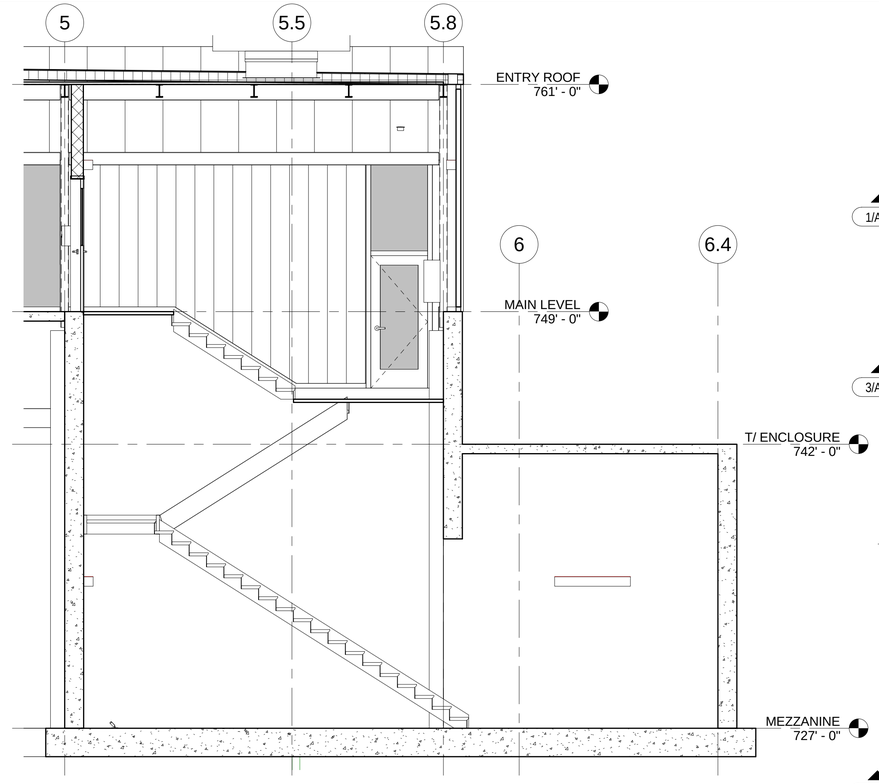

SECTION - STAIR #1 MEZZANINE TO EXIT LANDING & MAIN 3

SCALE: 1/4" = 1'-0" [REF: 5/ A-16]

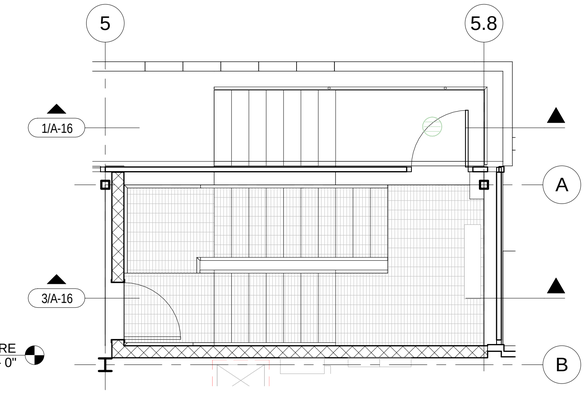

ENLARGED PLAN - STAIR #1 AT MAIN LEVEL & EXIT LANDING 5

SCALE: 1/4" = 1'-0" [REF: 1/ A-3]

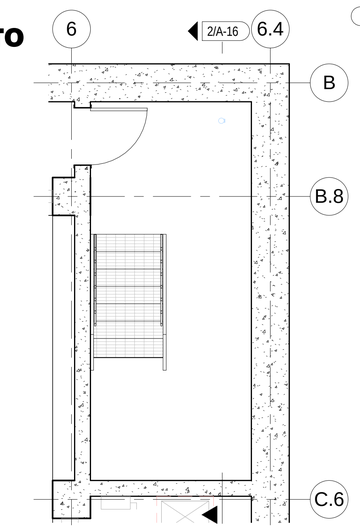

ENLARGED PLAN - STAIR #1 AT ENCLOSURE LEVEL 4

SCALE: 1/4" = 1'-0" [REF: 1/ A-1]

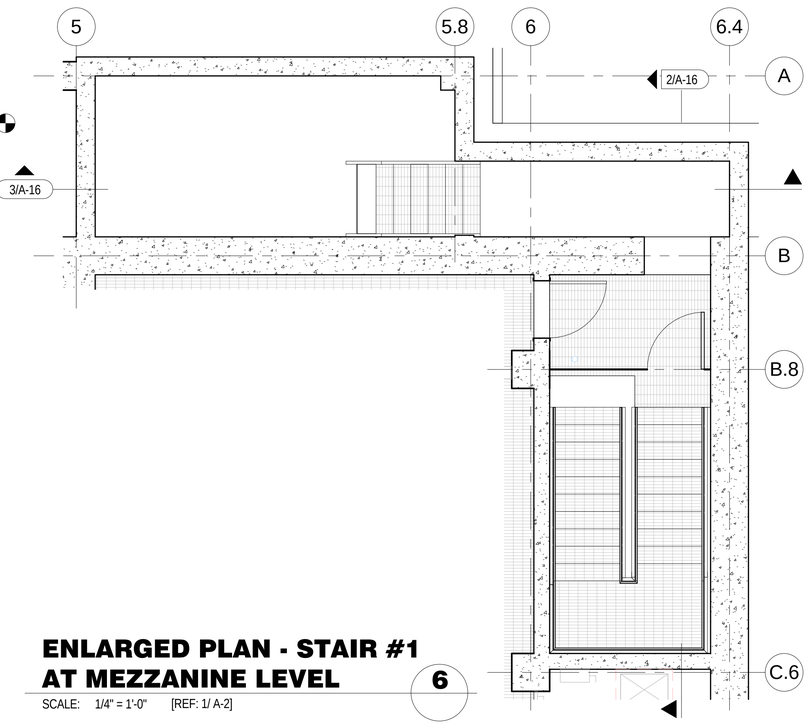

ENLARGED PLAN - STAIR #1 AT MEZZANINE LEVEL 6

SCALE: 1/4" = 1'-0" [REF: 1/ A-2]

NOT FOR CONSTRUCTION

REV.	DATE	DESCRIPTION
5	03/02/15	ISSUED FOR 90% REVIEW
4	02/23/15	ISSUED FOR 90% COST ESTIMATE

REVISIONS

HOLABIRD & ROOT

140 South Dearborn Chicago, IL 60603
Tel: 312 357 1771 Fax: 312 357 1909

www.holabird.com

	FERMI LAB	DATE
DESIGNED	M.BLEWITT	
DRAWN	M.BLEWITT	03/02/2015
CHECKED	G.GRUNLOH	
APPROVED		
SUBMITTED		

SCALE:

FERMI NATIONAL ACCELERATOR LABORATORY

UNITED STATES DEPARTMENT OF ENERGY

SBN FAR DETECTOR BUILDING

STAIR #1 PLANS & SECTIONS

DRAWING NO. **6-7-93** **A-16** REV. **5**

02 MAR. 2015

C:\Users\Matt_Bl\Desktop\Revit Locals\15592_SBN_Far_Detector_blewittm.rvt

3/2/2015 6:48:32 PM

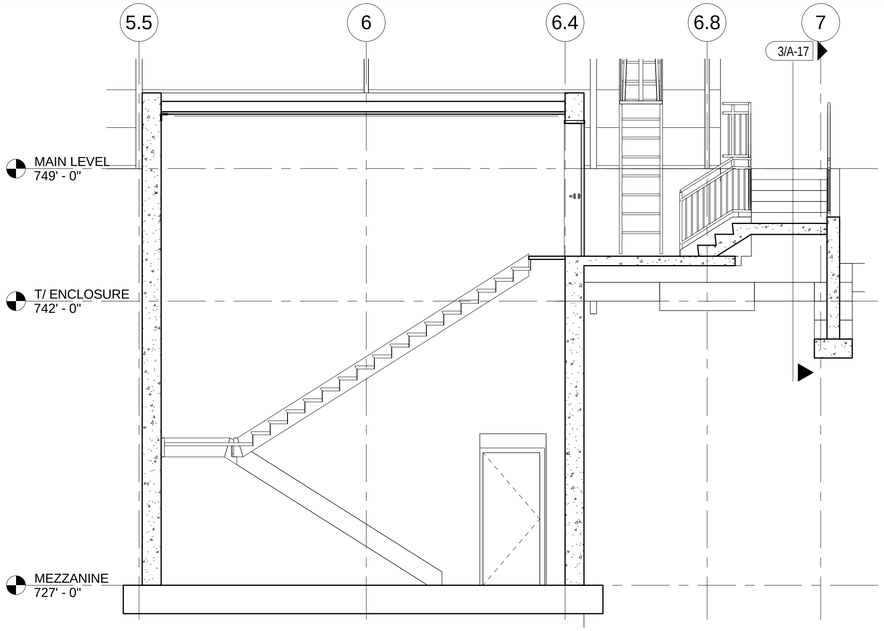

SECTION - STAIR #2 MEZZANINE TO EXIT LANDING AND MAIN 1

SCALE: 1/4" = 1'-0" [REF: 4/ A-17]

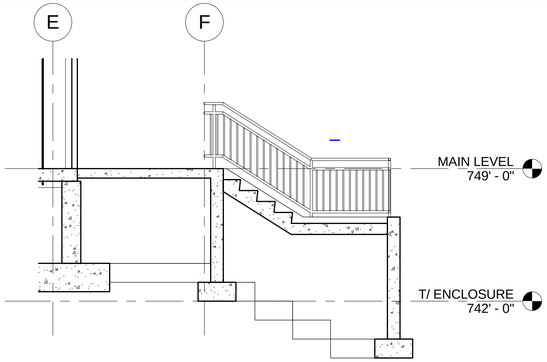

SECTION - STAIR #2 EXIT LANDING TO MAIN LEVEL 3

SCALE: 1/4" = 1'-0" [REF: 1/ A-8]

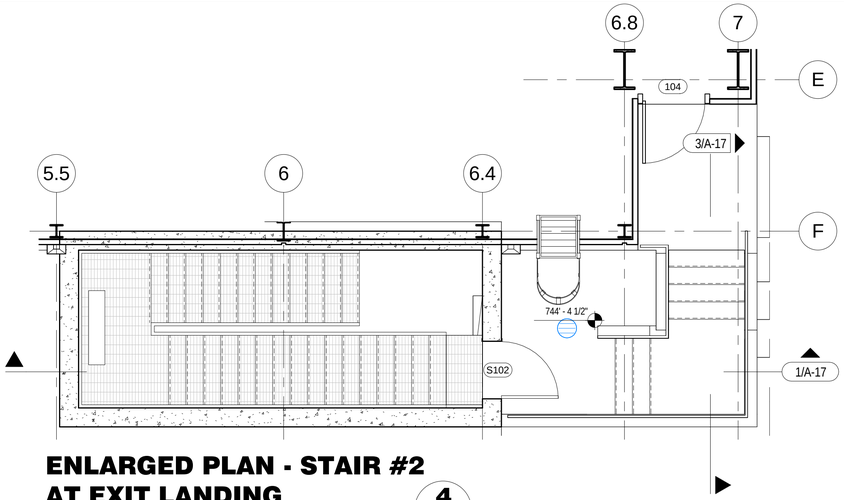

ENLARGED PLAN - STAIR #2 AT EXIT LANDING 4

SCALE: 1/4" = 1'-0" [REF: 1/ A-3]

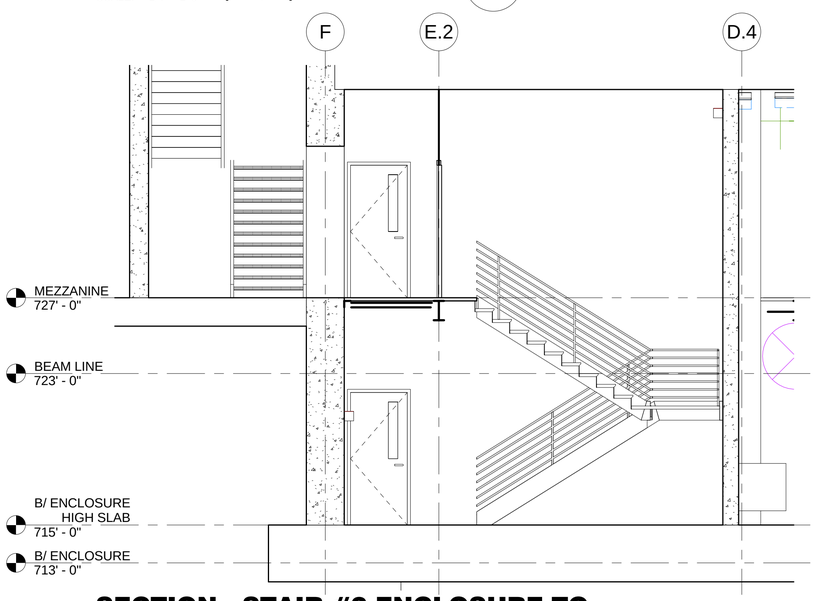

SECTION - STAIR #2 ENCLOSURE TO MEZZANINE LEVEL 2

SCALE: 1/4" = 1'-0" [REF: 5/ A-17]

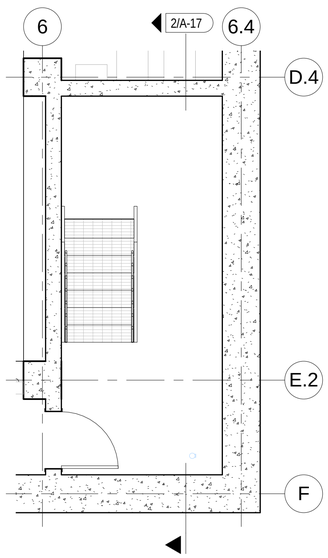

ENLARGED PLAN - STAIR #2 AT ENCLOSURE LEVEL 5

SCALE: 1/4" = 1'-0" [REF: 1/ A-1]

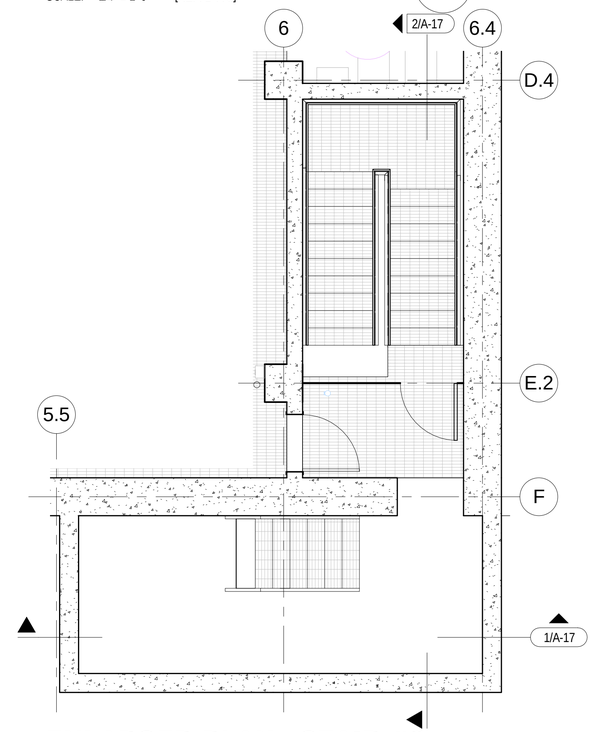

ENLARGED PLAN - STAIR #2 AT MEZZANINE LEVEL 6

SCALE: 1/4" = 1'-0" [REF: 1/ A-2]

NOT FOR CONSTRUCTION

REV.	DATE	DESCRIPTION
5	03/02/15	ISSUED FOR 90% REVIEW
4	02/23/15	ISSUED FOR 90% COST ESTIMATE

REVISIONS

HOLABIRD & ROOT
140 South Dearborn Chicago, IL 60603
Tel: 312 357 1771 Fax: 312 357 1909
www.holabird.com

	FERMI LAB	DATE
DESIGNED	M.BLEWITT	
DRAWN	M.BLEWITT	03/02/2015
CHECKED	G.GRUNLOH	
APPROVED	Approver	
SUBMITTED		

SCALE:

FERMI NATIONAL ACCELERATOR LABORATORY
UNITED STATES DEPARTMENT OF ENERGY

SBN FAR DETECTOR BUILDING
STAIR #2 PLANS & SECTIONS

DRAWING NO. 6-7-93 A-17 REV. 5

02 MAR. 2015

C:\Users\Matt_B\Desktop\Revit Locals\15592_SBN_Far_Detector_blewittm.rvt

3/2/2015 6:48:36 PM

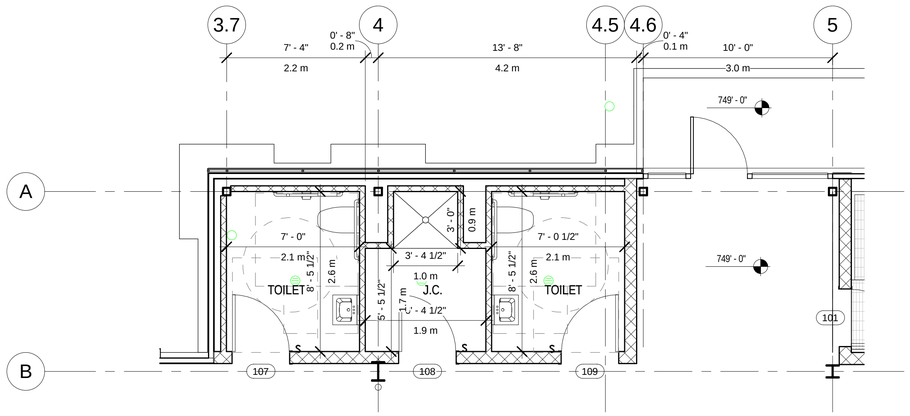

ENLARGED PLAN AT ENTRY, TOILET ROOMS & JANITOR'S CLOSET

1

SCALE: 1/4" = 1'-0"

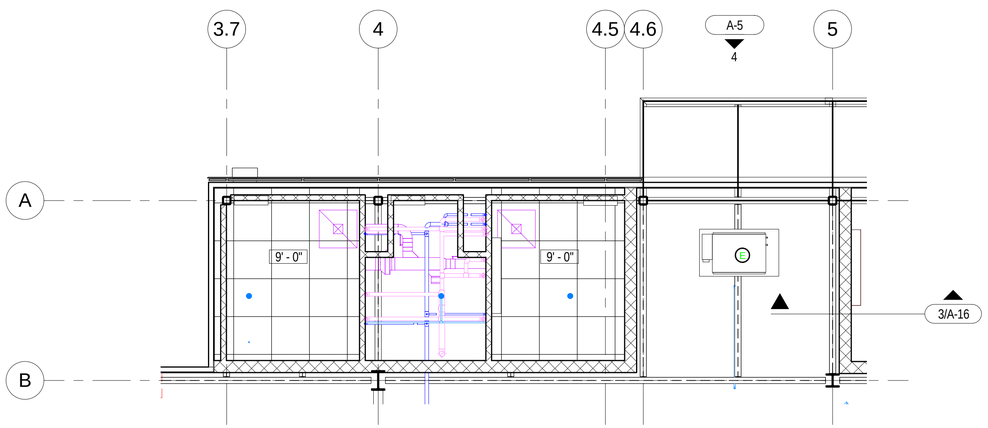

RCP AT ENTRY, TOILET ROOMS & JANITOR'S CLOSET

2

SCALE: 1/4" = 1'-0"

NOT FOR CONSTRUCTION

REV.	DATE	DESCRIPTION
5	03/02/15	ISSUED FOR 90% REVIEW
4	02/23/15	ISSUED FOR 90% COST ESTIMATE
3	01/26/15	ISSUED FOR 60% REVIEW

REVISIONS

HOLABIRD & ROOT
140 South Dearborn Chicago, IL 60603
Tel: 312 357 1771 Fax: 312 357 1909
www.holabird.com

	FERMI LAB	DATE
DESIGNED	M.BLEWITT	03/02/2015
DRAWN	M.BLEWITT	03/02/2015
CHECKED	G.GRUNLOH	03/02/2015
APPROVED		
SUBMITTED		

S W E PROJECT NORTH

SCALE:
1/4"=1'-0"
4 0 4 8
SCALE FEET

FERMI NATIONAL ACCELERATOR LABORATORY
UNITED STATES DEPARTMENT OF ENERGY

SBN FAR DETECTOR BUILDING
ENLARGED PLANS, RCPS & ELEVATIONS AT ENTRY, TOILET ROOMS & J.C.

DRAWING NO. 6-7-93 A-19 REV. 5

02 MAR. 2015

C:\Users\Matt_B\Desktop\Revit Locals\15592_SBN_Far_Detector_blewittm.rvt

3/2/2015 6:48:38 PM

DOOR SCHEDULE

DOOR NO.	LOCATION	OPENING SIZE WIDTH	OPENING SIZE HGT.	DOOR TYPE	DOOR MATL.	DOOR FIRE RATING (MINS)	DOOR U.C.	FRAME TYPE	FRAME MATL.	JAMB	HEAD	SILL	HDW. NO.	REMARKS
B/ ENCLOSURE														
S001	STAIR #1	3' - 0"	7' - 0"	B1	HM	90		F1	HM				01	
S002	STAIR #2	3' - 0"	7' - 0"	B1	HM	90		F1	HM				01	
MEZZANINE														
G001	ACCESS GATE	3' - 0"	7' - 0"			-							02	
G002	ACCESS GATE	3' - 0"	7' - 0"			-							02	
S051	STAIR #1	3' - 0"	7' - 0"	B1	HM	90		F1	HM				01	
S052	STAIR #2	3' - 0"	7' - 0"	B1	HM	90		F1	HM				01	
MAIN LEVEL														
100	MAIN ENTRY	3' - 0"	7' - 9"	C1	AL	-			AL				06	
101	STAIR #1	3' - 0"	7' - 0"	B1	HM	90		F1	HM				01	
102	LOADING DOCK	16' - 0"	14' - 0"			-								
103	NORTHWEST EXIT	3' - 3 1/2"	7' - 0 1/2"	C1	AL	-			AL				05	
104	NORTHEAST EXIT	3' - 3 1/2"	7' - 0 1/2"	C1	AL	-			AL				05	
105	SOUTHEAST EXIT	3' - 0"	7' - 0"	A1	HM	-		F1	HM				05	
106	SOUTHWEST EXIT	3' - 0"	7' - 0"	A1	HM	-		F1	HM				05	
107	TOILET ROOM	3' - 0"	7' - 0"	A1	HM	-		F1	HM				03	
108	JANITOR'S CLOSET	3' - 0"	7' - 0"	A1	HM	-		F1	HM				04	
109	TOILET ROOM	3' - 0"	7' - 0"	A1	HM	-		F1	HM				03	
S101	STAIR #1	3' - 0"	7' - 0"	C1	AL	-			AL				05	
S102	STAIR #2	3' - 0"	7' - 0"	B1	WD	90		F1	HM				01	

DOOR HARDWARE SETS

01	
	HINGES
1	EXIT DEVICE
1	CLOSER
1	WALL STOP
02	
	HINGES
1	LEVER SET (CLASSROOM)
1	WALL STOP
03	
	HINGES
1	LEVER SET (PRIVACY)
1	KICK PLATE - 9"
04	
	HINGES
1	LEVER SET (STORAGE)
1	KICK PLATE - 9"
05	
	HINGES
1	LEVER SET (ENTRANCE)
1	CLOSER W/ STOP ARM
1	SET WEATHERSTRIPPING
1	THRESHOLD
1	SWEEP

06	
	HINGES
1	EXIT DEVICE (ENTRANCE)
1	MANUAL TOP & BOTTOM BOLTS
1	COORDINATOR
2	CLOSERS W/ STOP ARM
1	DUST PROOF STRIKE
1	SET WEATHERSTRIPPING
1	AUTOMATIC DOOR BOTTOM
2	ARMOR PLATES - 36"
1	THRESHOLD
2	SWEEPS
07	
	HINGES
1	EXIT DEVICE (EXIT ONLY)
1	CLOSER W/ STOP ARM
1	SET WEATHERSTRIPPING
1	THRESHOLD
1	SWEEP

GENERAL NOTES: SCHEDULE

THE BELOW ITEMS ARE COMMENTS ABOUT DOOR SCHEDULE:

1. DOOR#: INDICATES THE DOOR NUMBER ON FLOOR PLANS.
2. OPENING SIZE (WXH): INDICATES THE OPENING WIDTH (W) BETWEEN JAMBS & OPENING HEIGHT (H) BETWEEN SUBSTRATE @ FLOOR & BOTTOM OF THE HEAD.
3. ALL DOORS ARE 1 3/4" THICK (U.N.O.)
4. DOOR TYPE: INDICATES DOOR TYPE, SEE DOOR TYPES ON A7-2.
5. ALL DOORS ARE FLUSH CONSTRUCTION (U.N.O.).
6. DOOR MATL: INDICATES MATERIAL (MATL) OF DOOR. SEE SPEC. FOR SPECIFIC FINISH.
   WD = WOOD PW = PAINTED WOOD
   HM = HOLLOW METAL HC = HOLLOW CORE WOOD
   ALUM = ALUMINUM GL = GLASS (W/OUT METAL STILES)
7. DOOR LABEL: INDICATES FIRE RATED LABEL (LBL) OF DOOR & FRAME.
   (-) = NO LABEL
   A LABEL 120 = 120 MINUTES = 2 HR
   B LABEL 90 = 90 MINUTES = 1 1/2 HR
   C LABEL 45 = 45 MINUTES = 3/4 HR
8. U.C.: COORDINATE DOOR SIZE W/ SPECIFIC UNDERCUT (UC) & FLOOR MATERIAL THICKNESS ABOVE FLOOR SUBSTRATE.
   (-) = 5/8" TYPICAL (U.N.O.).
9. FRAME TYPE: INDICATES FRAME TYPE, SEE FRAME TYPES ON A-20.
10. FRAME MATL: INDICATES MATERIAL (MATL) OF FRAME. SEE NOTE ABOVE FOR ABBREVIATIONS.
11. JAMB, HEAD & SILL: INDICATES HEAD, JAMB & SILL DETAILS SHOWN IN ARCHITECTURAL DRAWINGS. NUMBER IS USED FROM TYP. DOOR DETAIL DRAWING SHEET A-20 (U.N.O.); REFER TO ID SERIES FOR INTERIOR SILLS.
12. HDW#: INDICATES HARDWARE (HDW) NUMBER THAT IS DEFINED IN FINISH HARDWARE SPEC. SECTION.
13. REMARKS: INDICATES ROOM LOCATION & SPECIFIC REMARKS RELATING TO DOOR.

ROOM FINISH SCHEDULE

WT	ROOM NAME	BASE FINISH	CEILING FINISH	FLOOR FINISH	WALL FINISH	REMARKS
000	DETECTOR HALL					
100	ENTRY					
102	LOADING DOCK					
103	DETECTOR HALL					
107	TOILET					
108	J.C.					
109	TOILET					
S1	STAIR #1					
S2	STAIR #2					

DOOR AND FRAME ELEVATIONS

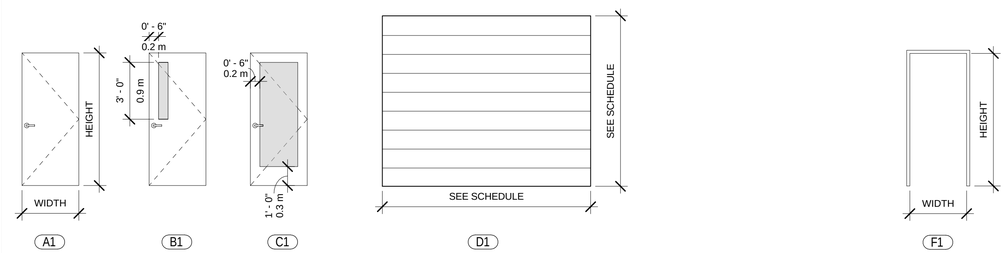

NOTES: DOORS & FRAMES

1. ALL DOOR CLOSERS & OPENING FORCE SETTINGS FOR ACCESSIBLE DOORS TO COMPLY W/ ACCESSIBILITY STANDARDS. FIRE RATED DOORS SHALL HAVE THE MIN. OPENING FORCE ALLOWABLE BY LOCAL CODE AUTHORITIES.
2. ALL DOORS & HARDWARE TO COMPLY WITH ACCESSIBILITY STANDARDS. SEE PLANS FOR DOOR SYMBOL. ALL DOORS WITH 3 SIDED FRAME (U.N.O. ON DOOR SCHEDULE OR ELEVATIONS).
3. ALL DOORS USED IN CONJUNCTION W/EXITS SHALL BE SO ARRANGED AS TO BE READILY OPENED WITHOUT THE USE OF A KEY (U.N.O) FROM THE SIDE FROM WHICH EGRESS IS MADE.
4. ALL FIRE-RATED DOORS SHALL HAVE FIRE-RATED CLOSERS; ALL DOOR FRAMES & HARDWARE TO BE FIRE LISTED TO MATCH FIRE DOOR RATINGS.
5. ALL EXIT DOORS SERVING MORE THAN 200 PERSONS SHALL HAVE PANIC HARDWARE.
6. PROVIDE KNURLED LEVER HARDWARE HANDLES AT ELECTRICAL, MECHANICAL & HAZARDOUS AREAS PER ACCESSIBILITY STANDARDS.
7. COORDINATE ALL SECURITY ACCESS DEVICES W/ OWNER.
8. ALL HM & WOOD DOORS HAVE 6 1/2" WIDE DOOR STILES (U.N.O.) W/ 7" MIN. HIGH TOP RAIL.
9. ALL ALUM DOORS HAVE 5" WIDE STILES (U.N.O.) & G.C. TO COORD. W/ SPECIFIC HARDWARE.
10. BOTTOM STILE OF ALUM OR HM DOORS TO BE FLUSH WITH NO EXPOSED SURFACE PLATES OR FASTENERS EXCEPT FOR SURFACE APPLIED KICKPLATES THAT ARE CALLED OUT IN HARDWARE SCHEDULE.
11. NO "THRU BOLTING" ON DOORS OR FRAMES (PROVIDE ADEQUATE BLOCKING IN DOOR FOR CLOSER ATTACHMENT). NO EXPOSED FASTENERS OR SCREWS FOR HDW AT DOORS, EXCEPT FOR F.H.W.S. FOR KICK PLATES.
12. RATED DOOR LOUVER TO HAVE FUSIBLE LINK; 24"X24" MAX., COORD. SIZE W/ MECHANICAL DRAWINGS
13. EXTERIOR DOOR FRAMES ARE GALVANIZED. EXTERIOR DOORS ARE INSULATED & GALVANIZED.
14. ALL DOOR FRAMES & HARDWARE TO BE RATED TO MATCH DOOR LABEL.
15. SEE GLAZING NOTES THIS SHEET FOR GLASS LITE.
16. ALL HM & ALUMINUM GLAZING STOPS TO BE FLUSH & SQUARE (NOT BEVELED) AND APPLIED W/F.H.M.S. (NO WRAP AROUND ON "GLASS KITS" FOR HM GLAZING STOPS)
17. ALL FIRE-RATED DOORS SHALL HAVE FIRE-RATED CLOSERS;
18. ALL DOOR CLOSER COVERS & COORDINATOR COVERS TO BE FIELD PTD COLOR OF HM (U.N.O.). ALL DOOR CLOSERS ARE ON ROOM SIDE OF DOOR (U.N.O.) NO DOOR CLOSERS ON CORR. SIDE UNLESS DOOR DIVIDES CORR.
19. 3'-2" HIGH DOOR HANDLE TYP. OR MFR. STANDARD.
20. 3'-2" HIGH PUSH BAR @ PANIC HARDWARE OR MFR. STANDARD.
21. NO MFR'S NAME PLATES ON ALUM. DOORS. G.C. TO REMOVE NAME PLATES ON DOORS AT NO ADDITIONAL COST.
22. 90 MINUTE LABELED DOORS UNLESS CALLED FOR SPECIFICALLY IN HDW SPEC. FOR ASTRAGAL @ DOORS INTO ELEC. SWITCH GEAR, MECH, & PUMP ROOMS AND EXTERIOR DOORS.
23. SEE TYPICAL HM DETAILS FOR NESTED STUDS

HEAD AND JAMB DETAILS

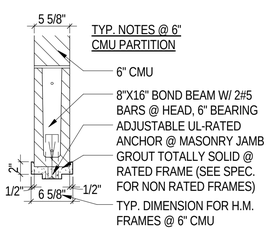

HJ-C11

SCALE: 1" = 1'-0"

NOT FOR CONSTRUCTION

REV.	DATE	DESCRIPTION
5	03/02/15	ISSUED FOR 90% REVIEW
4	02/23/15	ISSUED FOR 90% COST ESTIMATE
3	01/26/15	ISSUED FOR 60% REVIEW

REVISIONS

HOLABIRD & ROOT
140 South Dearborn Chicago, IL 60603
Tel: 312 357 1771 Fax: 312 357 1909
www.holabird.com

FERMI LAB		DATE
DESIGNED	M.BLEWITT	03/02/2015
DRAWN	M.BLEWITT	03/02/2015
CHECKED	G.GRUNLOH	03/02/2015
APPROVED		
SUBMITTED		

SCALE:

FERMI NATIONAL ACCELERATOR LABORATORY

UNITED STATES DEPARTMENT OF ENERGY

SBN FAR DETECTOR BUILDING

DOOR & FINISH SCHEDULE, DOOR HARDWARE & DETAILS

DRAWING NO. 6-7-93 A-20 REV. 5

02 MAR. 2015

C:\Users\Matt_B\Desktop\Revit Locals\155592_SBN_Far_Detector_blewittm.rvt
3/2/2015 6:48:40 PM

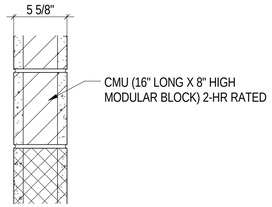

C11.X 6" CMU
(UL DES U906 @ 2-HR RATED WALLS)

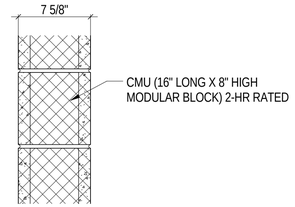

C21.X 8" CMU
(UL DES U @ 3-HR RATED WALLS)

CMU OR CMU SUBSTRATE FOR PARTITIONS

STEEL STUD SCHEDULE - INTERIOR PARTITIONS & USES

STUD TYPE & DATA	GPDW LAYERS	ALLOW. DEFLECT.	MAXIMUM STUD HEIGHT			
			2 1/2"	3 5/8"	4"	6"
RIBBED [DIETRCH DATA] GAUGE: 25 (0.0155") STUD SPACING 16" O.C. AIR PRESSURE: 5 PSF	(1) 5/8" EACH SIDE	L/240	11'-10"	15'-4"	16'-9"	21'-10"
	(1) 5/8" EACH SIDE	L/360	10'-4"	13'-1"	14'-7"	19'-1"
	(2) 5/8" EACH SIDE	L/240	15'-1"	17'-0"	15'-9"	23'-8"
	(2) 5/8" EACH SIDE	L/360	13'-2"	14'-0"	16'-7"	20'-8"
NON-RIBBED [USG DATA] GAUGE: (0.0188") STUD SPACING: 16" O.C. AIR PRESSURE: 5 PSF	(1) 5/8" EACH SIDE	L/240	12'-6"	16'-0"	17'-3"	20'-0"
	(1) 5/8" EACH SIDE	L/360	10'-9"	14'-0"	15'-0"	20'-0"
	(2) 5/8" EACH SIDE	L/240	13'-6"	16'-9"	17'-3"	20'-0"
	(2) 5/8" EACH SIDE	L/360	11'-9"	14'-9"	15'-9"	20'-0"
CHASE WALL [USG DATA] GAUGE: 25 (0.0188") STUD SPACING: 16" O.C. AIR PRESSURE: 5 PSF	(1) 5/8" EACH SIDE	L/240	13'-3"	17'-6"	22'-9"	
	(1) 5/8" EACH SIDE	L/360	11'-6"	15'-6"	19'-9"	
	(2) 5/8" EACH SIDE	L/240	14'-6"	19'-0"	23'-6"	
	(2) 5/8" EACH SIDE	L/360	12'-9"	16'-6"	21'-3"	
			1/2" C-H STUD	4" C-H STUD	6" C-H STUD	DBL. 6" E STUD
SHAFT WALL [USG DATA] GAUGE: 25 (0.0188") STUD SPACING: 16" O.C. AIR PRESSURE: 5 PSF	1" SHAFT + (2) 5/8" OTHER SIDE	L/240	10'-5"	13'-10"	23'-11"	26'-3"
	1" SHAFT + (2) 5/8" OTHER SIDE	L/240	9'-3"	12'-6"	19'-2"	23'-0"

THE NOTES BELOW APPLY TO PARTITION SCHEDULE ABOVE.
1. ALL GPDW PARTITIONS ARE BASED ON "DIETRCH" OR "USG" DATA. OTHER MANUFACTURERS TO MEET OR EXCEED PARTITION PERFORMANCE LISTED ABOVE.
2. FOR HEIGHTS OVER MAX. HEIGHTS LISTED USE KICKERS TO STRUCTURE ABOVE. (COORDINATE W/ HVAC & OTHER TRADES).
3. USE L/360 ALLOWABLE DEFLECTION FOR "TILED" WALLS.

GENERAL NOTES: FIRESTOPPING

1. TYPICAL FIRESTOPPING DETAILS SHOWN; ALL MAY NOT BE REQUIRED ON THE PROJECT. ADDITIONAL DETAILS MAY BE REQUIRED. REFER TO UL FOR ADDITIONAL INFORMATION.
2. ALL PENETRATIONS THROUGH FIRE-RATED PARTITIONS SHALL BE FIRESTOPPED.
3. FIRESTOPPING FIRE-RATING BASED ON FIRE-RATING OF PARTITION TYPES. SEE PLANS FOR PARTITION TYPES. ALL NEW PARTITIONS ON PLAN TO BE TYPE UNLESS NOTED OTHERWISE.
4. ALL FIRE RATED PARTITION ASSEMBLIES ARE TO BE CARRIED TO THE SLAB ABOVE & VOIDS FILLED AT TOP.
5. ALL VOIDS THROUGH & AT THE PERIMETER OF FIRE RATED PARTITIONS ARE TO BE FILLED WITH FIRE STOPPING PRODUCTS.

PARTITION LEGEND

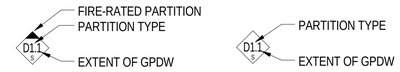

TYP. FIRE RATED PARTITION

TYP. NON-RATED PARTITION

EXTENT OF GPDW

X = HEIGHT OF STUDS/CMU & GPDW

1 STUDS/CMU TO UNDERSIDE OF SLAB, GPDW TO SLAB

2 STUDS/CMU TO SLAB, GPDW TO 4" ABOVE CEILING

3 STUDS/CMU TO CEILING, GPDW TO CEILING

4 LOW WALL, SEE A2-1 THRU A2-2 FOR HEIGHT

CLASSIFICATION FOR GPDW PARTITIONS

D1 THRU D39	STANDARD PARTITION TYPES
D40 THRU D59	CHASE WALLS
D60 THRU D79	SPECIAL CONDITIONS
F1 THRU F9	FURRING WALL
S1 THRU S25	SHAFT WALLS

GENERAL NOTES: PARTITION TYPES

1. SEE PARTITION TYPES FOR STUD DEPTHS. SEE PARTITION SCHEDULE FOR STUD GAUGE & STUD SPACING.
2. SEE PLANS FOR PARTITION TYPES. ALL NEW PARTITIONS ON PLAN TO BE TYPE UNLESS NOTED OTHERWISE.
3. ALL CERAMIC TILE ON THE WALL IS THIN SET (APPROXIMATE 3/8" THICK). THE DIMENSION OF THE WALL PARTITION THICKNESS ON THE PLANS DO NOT INCLUDE THE 3/8" THICKNESS.
4. PARTITIONS ENCLOSING SPACES WITHOUT CEILINGS ARE TO EXTEND TO UNDERSIDE OF SLAB ABOVE.
5. ALL FIRE RATED PARTITION ASSEMBLIES ARE TO BE CARRIED TO THE SLABABOVE & VOIDS FILLED AT TOP.
6. ALL VOIDS THROUGH & AT THE PERIMETER OF FIRE RATED PARTITIONS ARE TO BE FILLED WITH FIRE STOPPING PRODUCTS.
7. ALL GPDW PARTITIONS, SOFFITS, FASCIAS, ETC. ARE TO HAVE METAL DRYWALL TRIM & METAL CORNER BEAD (NO PLASTIC TRIM).
8. INSTALL A CONTROL JOINT SYSTEM @ 30'-0" MAX. FOR GPDW PARTITIONS.
9. ALL GPDW PARTITIONS:
   A. ALL FIRE RATED PARTITIONS AND PARTITIONS WITH SOUND ATTENUATION TO BE CAULKED @ PERIMETER.
   B. NON-RATED METAL STUD PARTITIONS ARE TO HAVE STUDS EXTENDED TO STRUCTURE ABOVE (U.N.O).
   C. ALL GPDW PARITIONS IN TOILETS, PANTRY AREAS, KITCHENS, & JANITOR'S CLOSETS TO EXTEND TO THE STURCTURE ABOVE.
   D. FOR TYPICAL SHAFTWALL PARTITIONS THE 1" LINER PANEL IS TO BE EXPOSED TO THE SHAFT SIDE & OTHER GPDW TO BE EXPOSED TO THE ROOM SIDE.
   E. USE WATER RESISTANT GPDW ON ALL PARTITIONS WHICH ARE PENETRATED BY PLUMBING PIPING.
10. ALL CMU OR BLOCK PARTITIONS:
   A. ALL FIRE RATED PARTITIONS AND PARTITIONS WITH SOUND ATTENUATION TO BE CAULKED @ PERIMETER.
   B. FIRE RATED UNITS SHALL COMPLY W/ THE STANDARDS OF AMERICAN INSURANCEASSOCIATION AND SHALL HAVE AN EQUILVALENT THICKNESS IN EXCESS ON MIN. REQUIREMENTS. (COORDINATE PARTITION TYPE W/ RATING SYMBOLS ON PLANS).
   C. 5" HIGH X 16" STARTER COURSE TO BE PROVIDED AT PARTITIONS W/ 7'-0" HIGH DOOR FRAMES
   D. CMU PARTITIONS NOT EXTENDED TO SLAB ABOVE TO BE LATERALLY BRACED W. METAL STUD KICKERS AT TOP OF THE PARTITION, U.N.O. COORDINATE W/ HVAC & OTHER TRADES.
11. PROVIDE FIBERGLASS FACED GPDW AT ALL WET WALLS.

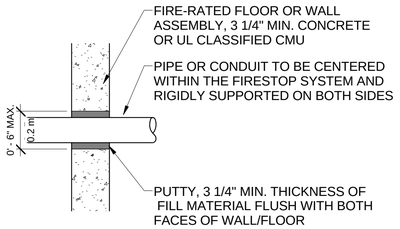

SINGLE INSULATED PIPE THROUGH CONCRETE OR CMU WALL/FLOOR
(UL SYSTEM #C-AJ-5001)
1 1/2, 2 & 3 HR RATING

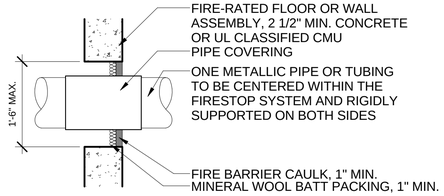

CABLE BUNDLE THROUGH CONCRETE OR CMU WALL/FLOOR
(UL SYSTEM #W-L-5001)
1 & 2 HR RATING

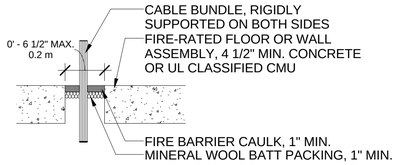

SINGLE INSULATED PIPE THROUGH GYPSUM WALLBOARD ASSEMBLY
(UL SYSTEM #W-L-5001)
1 & 2 HR RATING

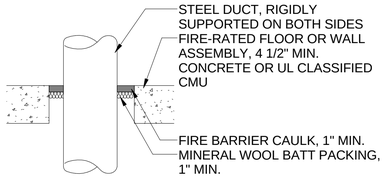

STEEL DUCT THROUGH CONCRETE OR CMU WALL/FLOOR
(UL SYSTEM #C-AJ-7003)
3 HR RATING

NOT FOR CONSTRUCTION

REV.	DATE	DESCRIPTION
5	03/02/15	ISSUED FOR 90% REVIEW

REVISIONS

HOLABIRD & ROOT
140 South Dearborn Chicago, IL 60603
Tel: 312 357 1771 Fax: 312 357 1909
www.holabird.com

	FERMI LAB	DATE
DESIGNED	M.BLEWITT	
DRAWN	M.BLEWITT	03/02/2015
CHECKED	G.GRUNLOH	
APPROVED		
SUBMITTED		

SCALE:

FERMI NATIONAL ACCELERATOR LABORATORY
UNITED STATES DEPARTMENT OF ENERGY

SBN FAR DETECTOR BUILDING
PARTITION TYPES AND DETAILS

DRAWING NO. 6-7-93 A-21 REV. 5

02 MAR. 2015

C:\Users\Matt_B\Desktop\Revit Locals\15592_SBN_Far_Detector_blewittm.rvt

3/2/2015 6:48:41 PM

GENERAL NOTES

SOIL DATA

1. A REPORT ON SUBSURFACE CONDITION ENTITLED "REPORT OF SOILS EXPLORATION" DATED 11-03-2014 HAS BEEN PREPARED BY TSC GEOTECHNICAL GROUP. COPIES ARE AVAILABLE FOR PERUSAL IN THE OFFICE OF HOLABIRD & ROOT, CHICAGO, ILLINOIS AND AT FERMILAB, KIRK AND PINE STREETS, BATAVIA ILLINOIS.

EXCAVATION

1. THE SUBCONTRACTOR SHALL DESIGN, PROVIDE, INSTALL, AND MAINTAIN ALL UNDERPINNING, SHORING, SHEETING, AND BRACING AS MAY BE REQUIRED FOR THE SUPPORT OF SURROUNDING PROPERTY, BUILDINGS, PAVEMENTS, SIDEWALKS, UTILITIES, UTILITY EQUIPMENT, ETC., UNLESS OTHERWISE SHOWN ON THE DRAWINGS.
2. THE SUBCONTRACTOR SHALL REMOVE ALL OR PARTS OF ANY EXISTING STRUCTURES AND OTHER DEBRIS WHICH INTERFERE WITH THE WORK, AND SHALL TAKE CARE TO PREVENT DAMAGE TO PORTIONS WHICH ARE TO REMAIN TEMPORARILY OR PERMANENTLY IN PLACE. THE SUBCONTRACTOR SHALL ALSO PROTECT FROM DAMAGE ALL UTILITIES, AND SUCH WHICH ARE TO REMAIN OPERATING.
3. ALL EXCAVATIONS SHALL BE CARRIED OUT IN ACCORDANCE WITH O.S.H.A. GUIDELINES. THE SIDEWALLS OF ANY EXCAVATION SHALL BE SLOPED AS REQUIRED TO PROVIDE STABLE SLOPES. WHERE ADEQUATE SLOPES CANNOT BE OBTAINED, THE EXCAVATION SHALL BE PERFORMED USING ALTERNATIVE METHODS TO RETAIN THE SOILS. PERFORM EARTHWORK WORK IN COMPLIANCE WITH THE APPLICABLE REQUIREMENTS OF THE LOCAL CODES.
4. THE SUBCONTRACTOR SHALL EFFECTIVELY MAINTAIN THE CONSTRUCTION AREA IN A DEWATERED STATE.
5. THE SUBCONTRACTOR SHALL PREPARE ALL CONSTRUCTION AND EXCAVATION PROCEDURES AND SEQUENCES AND SUBMIT SUCH FOR FERMILAB'S INFORMATION AND FERMILAB'S TESTING AGENCY'S REVIEW PRIOR TO THE START OF CONSTRUCTION.
6. THE SUBCONTRACTOR SHALL PROOF ROLL AND UNIFORMLY COMPACT THE SUBGRADE AFTER STRIPPING THE FILL IN AREAS THAT WILL NOT BE EXCAVATED FURTHER FOR BASEMENT CONSTRUCTION.

BACKFILL

1. WHERE BACKFILL IS REQUIRED ON BOTH SIDES OF A WALL OR GRADE BEAM, THE BACKFILL OPERATION SHALL PROCEED ON BOTH SIDES SIMULTANEOUSLY AT UNIFORM LEVELS OF FILL SO AS NOT TO CREATE LATERAL EARTH PRESSURES WHICH WOULD DAMAGE THE STRUCTURAL INTEGRITY OF THE WALL.
2. BACKFILL SHALL NOT BE PLACED AGAINST FOUNDATION WALLS OF THE BUILDING UNTIL THE FRAMED LEVEL AT THE TOP OF THE WALL AND THE SLAB ON GRADE AT THE BOTTOM OF THE WALL ARE IN PLACE AND HAVE DEVELOPED SUFFICIENT STRENGTH.
3. BACKFILL MATERIAL, WITHIN THE BUILDING BASEMENT AREA UNDER FLOOR SLABS, DRIVEWAYS/SIDEWALKS, AND EQUIPMENT PADS, SHALL BE A TESTING AGENCY APPROVED IDOT GRADATION CA-6 GRANULAR MATERIAL (CA-7 SHALL BE ALLOWED WHEN FREEZING CONDITIONS EXIST) PLACED AND COMPACTED IN APPROXIMATE12 INCH LIFTS TO BETWEEN 90 AND 95 PERCENT OF THE MODIFIED PROCTOR DENSITY (ASTMD-1557). COMPACTION IN EXCESS OF 95 PERCENT IS NOT DESIRABLE, SINCE IT CAN RESULT IN HIGHER LATERAL EARTH PRESSURES THAN RECOMMENDED FOR DESIGN. THIS TYPE OF FILL SHALL BE PLACED TO WITHIN 12" OF BOTTOM OF SLAB ELEVATION. BACKFILL MATERIAL WITHIN THE REMAINDER OF THE BUILDING BASEMENT AREA SHALL CONSIST OF EXCAVATED MATERIALS THAT ARE CLASSIFIED AS INORGANIC SILTY CLAYS OF LOW TO MEDIUM PLASTICITY AND PLACED IN APPROXIMATE 9 INCH LIFTS TO BETWEEN 90 AND 95 PERCENT OF THE MODIFIED PROCTO DESNISTY (ASTMD-1557). (SEE GEOTECHNICAL REPORT)
4. BACKFILL ADJACENT TO WALLS, FOUNDATIONS AND OVER UTILITY TRENCHES SHALL BE A TESTING AGENCY APPROVED CLEAN, GRANULAR MATERIAL MEETING THE GRADATION REQUIREMENTS OF IDOT GRADATION CA-7 COMPACTED IN THIN LIFTS TO A MINIMUM OF 95% OF MODIFIED PROCTOR DENSITY (ASTMD-1557). (SEE GEOTECHNICAL REPORT.)

FOUNDATIONS

1. THE BOTTOM OF THE FOOTINGS SHALL REST ON TESTING AGENCY APPROVED MATERIAL WITH A MINIMUM BEARING CAPACITY AS NOTED ON THE DRAWINGS. (SEE GEOTECHNICAL REPORT.)
2. THE BOTTOM OF FOOTING ELEVATIONS AND SOIL BEARING CAPACITIES AS SHOWN ON DRAWINGS ARE ESTIMATED FROM THE SOIL BEARING DATA. (SEE GEOTECHNICAL REPORT.)
3. ALL FOUNDATION EXCAVATIONS SHALL BE CLEAN AND DRY PRIOR TO PLACING CONCRETE. BOTTOM SHALL BE INSPECTED AND DESIGN BEARING CAPACITY CONFIRMED BY FERMILAB BEFORE FOOTINGS ARE PLACED.
4. NO FOOTING SHALL BE PLACED ON OR AGAINST SUBGRADES CONTAINING FREE WATER, FROST, OR ICE. SHOULD WATER, FROST, OR ICE ENTER AN AREA AFTER SUBGRADE APPROVAL, THE SUBGRADE SHALL BE REINSPECTED BY FERMILAB AFTER REMOVAL OF WATER, FROST, OR ICE.

SLAB ON GRADE

1. THE SLABS ON GRADE SHALL BE UNDERLAIN BY 6" OF IDOT GRADATION DRAINAGE FILL PLACED OVER THE NATURAL SUBGRADE AS APPROVED BY FERMILAB. THE SUBGRADE SHALL BE COMPACTED TO A MINIMUM OF 95% OF MAXIMUM DRY DENSITY IN ACCORDANCE WITH MODIFIED PROCTOR DENSITY (ASTMD-1557).
2. SUBCONTRACTOR SHALL BE RESPONSIBLE FOR REVIEWING FLOOR DRAIN LOCATION WITH PLUMBING PLANS AND SUBCONTRACTOR. PROVIDE PROPER PITCH TO DRAIN AS INDICATED ON THE PLANS OR AS SPECIFIED.

CONCRETE (CAST IN PLACE)

1. CONCRETE COMPRESSIVE STRENGTHS (28 DAYS MINIMUM) SHALL BE AS FOLLOWS:

CONCRETE FOR FOOTINGS	5,000 PSI	NORMAL WT. CONCRETE (WEIGHT 145 LBS./CU. FT.)
CONCRETE FOR WALLS	5,000 PSI	NORMAL WT. CONCRETE (WEIGHT 145 LBS./CU. FT.)
CONCRETE FOR BEAMS/COLUMNS	5,000 PSI	NORMAL WT. CONCRETE (WEIGHT 145 LBS./CU. FT.)
CONCRETE FOR SLAB ON GRADE	3,000 PSI-3,500 PSI	NORMAL WT. CONCRETE (WEIGHT 145 LBS./CU. FT.)
ALL OTHER CONCRETE	5,000 PSI	NORMAL WT. CONCRETE (WEIGHT 145 LBS./CU. FT.)

2. CONCRETE PROTECTION FOR REINFORCING BARS SHALL BE AS FOLLOWS:

FOOTINGS	3" CLEAR, BOTTOM AND SIDES
WALLS	2" CLEAR
PIERS & COLS.	1 1/2" CLEAR TO TIES

3. FOR ADMIXTURES SEE SPECIFICATION SECTION 03 3000.

REINFORCING STEEL

1. ALL REINFORCING STEEL SHALL CONFORM TO THE FOLLOWING SPECIFICATIONS:

DEFORMED BILLET STEEL (Y.P. 60,000 PSI) GRADE 60	ASTM DESIGNATION A615 LATEST EDITION
WELDED WIRE FABRIC	ASTM DESIGNATION A185 LATEST EDITION

2. EPOXY COATED REBARS SHALL BE INSTALLED AT LOCATIONS INDICATED ON THE PLAN OR IN THE SPECIFICATIONS. EPOXY COATING SHALL CONFORM TO ASTM A775 (LATEST EDITION.)
3. REINFORCING DETAILS SHALL CONFORM TO THE REQUIREMENTS OF THE A.C.I. 318 BUILDING CODE, LATEST EDITION AND THE MANUAL OF STANDARD PRACTICE FOR DETAILING CONCRETE STRUCTURES AND A.C.I. 315, LATEST EDITION UNLESS OTHERWISE SHOWN OR NOTED.
4. LAP ALL BARS 36 DIAMETERS BUT NOT LESS THAN 24" AT SPLICES UNLESS OTHERWISE SHOWN. WELDED WIRE FABRIC SHALL BE LAPPED ONE (1) SPACE TRANSVERSELY AND TWO (2) SPACES LONGITUDINALLY.
5. UNLESS OTHERWISE SHOWN PROVIDE 2-#5 ADDITIONAL BARS TOP AND BOTTOM AND AT THE SIDE OF OPENINGS 8" SQUARE AND LARGER IN WALLS AND SLABS AND EXTEND 2'-6" BEYOND OPENING.
6. PROVIDE ADEQUATE BOLSTERS, HIGH CHAIRS, SUPPORT BARS, ETC., TO MAINTAIN SPECIFIED CLEARANCES FOR THE ENTIRE LENGTH OF AL REINFORCING BARS AND WELDED WIRE FABRIC.
7. SHOP DRAWINGS CHECKED BY THE SUBCONTRACTOR SHOWING REINFORCING DETAILS, INCLUDING STEEL SIZES, SPACING, PLACEMENT, AND SUPPORT SHALL BE SUBMITTED TO FERMILAB FOR REVIEW PRIOR TO FABRICATION.

STRUCTURAL STEEL

1. ALL STEEL SECTIONS AND PLATES (INCLUDING COLUMN BASE PLATES) SHOWN ON STRUCTURAL DRAWINGS ARE TO BE INCLUDED IN THE STRUCTURAL STEEL SUBCONTRACT UNLESS OTHERWISE NOTED.
2. ALL STEEL SHALL BE NEW STEEL MANUFACTURED IN THE U.S.A., SHALL BE FABRICATED AND ERECTED IN ACCORDANCE WITH CURRENT A.I.S.C. STANDARDS AND APPLICABLE CODES, AND SHALL CONFORM TO THE FOLLOWING ASTM, SPECIFICATIONS UNLESS OTHERWISE NOTED:

WIDE FLANGE AND STRUCTURAL TEE MEMBERS:	A992 OR A572 GRADE 50
ALL PLATES, ANGLES, CHANNELS, CONN. MAT'L:	A36
STEEL TUBING:	A500 GRADE B
STEEL PIPE:	A53 GRADE B OR A501

3. ALL STRUCTURAL STEEL SHALL BE DETAILED, FABRICATED, AND ERECTED IN ACCORDANCE WITH "THE CODE OF STANDARD PRACTICE FOR STEEL BUILDINGS AND BRIDGES" AND THE "SPECIFICATION FOR STRUCTURAL STEEL BUILDINGS" (A.I.S.C. LATEST EDITION).
4. ALL STRUCTURAL STEEL SHALL BE OF SIZE SHOWN ON DRAWINGS AND SHALL BE STRAIGHT AND FREE OF TWIST. SUBSTITUTIONS WILL NOT BE PERMITTED WITHOUT APPROVAL OF FERMILAB.
5. ALL COLUMN BEARING ENDS TO BE TRUE AND SQUARE. ALL COLUMNS TO BE PLUMB AND LEVEL BEARING.
6. THE FABRICATOR/ERECTOR SHALL SUBMIT TO FERMILAB FOR REVIEW, ENGINEERED AND CHECKED DRAWINGS SHOWING SHOP FABRICATION, DETAILS, FIELD ASSEMBLY DETAILS, AND ERECTION DIAGRAMS FOR ALL STRUCTURAL STEEL. ALL SHOP DRAWINGS MUST BE COMPLETE FOR ALL STRUCTURAL STEEL WITH BEAM SIZES, MARKS, ETC., SHOWN ON ERECTION PLANS. ALL SHOP DRAWINGS SHALL BE PREPARED UNDER THE DIRECTION OF A LICENSED STRUCTURAL ENGINEER IN THE STATE OF ILLINOIS.
7. ALL CONNECTIONS SHALL BE DESIGNED AND DETAILED BY THE FABRICATOR/ERECTOR, UNLESS OTHERWISE NOTED. DESIGN AND DETAILING SHALL BE PERFORMED USING RATIONAL ENGINEERING PROCEDURES SUCH AS THOSE DESCRIBED IN THE "AISC MANUAL OF STEEL CONSTRUCTION," 13TH EDITION. THE GENERAL DETAILS SHOWN ON THE DRAWINGS ARE CONCEPTUAL ONLY AND, UNLESS SPECIFICALLY NOTED, DO NOT INDICATE THE REQUIRED NUMBER OF BOLTS OR WELD SIZES. THE FABRICATOR/ERECTOR SHALL SUBMIT TO FERMILAB FOR REVIEW ENGINEERING CALCULATIONS, WITH CONNECTION DETAIL DRAWINGS, FOR EACH CONNECTION TYPE, MEMBER SIZE, AND FORCE INDICATED ON THE STRUCTURAL DRAWINGS. CALCULATIONS SHALL BE SUBMITTED PRIOR TO THE SUBMITTAL OF STRUCTURAL STEEL SHOP DRAWINGS. THE CALCULATIONS SHALL BE PERFORMED UNDER THE DIRECT SUPERVISION OF, AND SEALED BY, A LICENSED STRUCTURAL ENGINEER.
8. ALL BEAMS SHALL BE FABRICATED WITH THE NATURAL CAMBER UP AND WITH CAMBER INDICATED CLEARLY ON THE STEEL WITH INDELIBLE IDENTIFICATION.
9. SEE SPECIFICATIONS FOR METHOD OF CLEANING STRUCTURAL STEEL AND FOR SHOP AND FIELD PAINT. (SECTION 05 1200)
10. THERE SHALL BE NO FIELD CUTTING OF STRUCTURAL MEMBERS FOR THE WORK OF OTHER TRADES WITHOUT THE PRIOR WRITTEN APPROVAL OF FERMILAB.
11. SEE SPECIFICATIONS SECTION 05 1200 FOR SHOP & FIELD INSPECTION AND TESTING OF STRUCTURAL STEEL.
12. FOR STRENGTH AND TYPE OF CONNECTIONS SEE TYPICAL CONNECTION DETAILS ON STRUCTURAL TYPICAL DETAIL DRAWINGS (S3-3)
13. BOLTED CONNECTIONS SHALL BE BEARING TYPE CONNECTIONS WITH THREADS INCLUDED IN SHEAR PLANE (A325-N) UTILIZING 3/4" DIAMETER HIGH STRENGTH BOLTS WITH WASHERS UNDER NUTS CONFORMING TO ASTM DESIGNATION A325 (LATEST REVISION) TIGHTENED TO SPECIFIED TENSION UNLESS OTHERWISE SHOWN OR NOTED. ALL BOLTS SHALL BE MANUFACTURED IN THE U.S.A.
14. TABULATED MINIMUM SHEAR CAPACITIES FOR CONNECTIONS ARE SHOWN ON DRAWING (S3-3). ALL BEAM REACTIONS EXCEEDING THE TABULATED MINIMUM SHEAR CAPACITIES ARE NOTED ON THE DRAWINGS AT EACH END OF THE BEAM OR IN BEAM SCHEDULE.
15. WELDED CONNECTIONS SHALL BE AS SHOWN ON DETAILS, ALL WELDING SHALL BE EITHER MANUAL ARC WELDING OR SUBMERGED ARC WELDING, BOTH TO PROVIDE PROPERTIES OF THE BASE MATERIAL. TECHNIQUES OF WELDING AND PREHEAT ARE TO FOLLOW PUBLISHED RECOMMENDATIONS OF BASE MATERIAL MANUFACTURER. ALL WELDING SHALL BE PERFORMED BY CERTIFIED WELDERS AND IN ACCORDANCE WITH THE PUBLISHED RECOMMENDATIONS OF THE AMERICAN WELDING SOCIETY AS NOTED IN THE A.I.S.C. SPECIFICATIONS UNLESS OTHERWISE SHOWN. MINIMUM TENSILE STRENGTH OF ELECTRODES SHALL BE 70 KSI.
16. SHOP CONNECTIONS SHALL BE WELDED OR BOLTED. WELDS SHALL BE DESIGNED TO BE FULLY EQUIVALENT IN STRENGTH TO BOLTED CONNECTIONS.
17. ALL STEEL MEMBERS WHERE LOCATED OR EXTENDING BELOW GROUND FLOOR SLAB SHALL BE ENCASED IN A MINIMUM OF 3" OF CONCRETE.
18. ALL STEEL MEMBERS EXPOSED TO WEATHERING, OR WITHIN EXTERIOR WALLS (SUCH AS GRILLAGE STEEL, LINTELS, AND SHELF ANGLES) SHALL BE HOT-DIP GALVANIZED.

METAL DECK

1. DECKS SHALL BE AS CALLED FOR ON DRAWINGS AND IN SPECIFICATION SECTION 05 3100 AND SHALL BE SECURELY FASTENED TO THE STEEL FRAMEWORK BY WELDS NO LESS THAN 5/8" DIAMETER AT 12" CENTERS MAXIMUM. SIDE LAPS SHALL BE FASTENED 36" MAXIMUM ON CENTER (MINIMUM 3 PER SPAN) UNLESS NOTED OTHERWISE.
2. ALL DECKING SHALL BE WELDED TO STRUCTURAL STEEL BY QUALIFIED WELDERS USING PRE-QUALIFIED PROCEDURES, OR PROCEDURES QUALIFIED THROUGH AWS D1.3 WHERE NO PRE-QUALIFIED PROCEDURES EXIST. THE ERECTOR SHALL ESTABLISH A WELDING PROCEDURE FOR THE PLUG WELD OF THE STEEL DECKING TO THE STRUCTURAL STEEL FOR THE PARTICULAR GAUGE OF DECK USED. PRIOR TO THE START OF ERECTION OF THE STEEL DECK, EACH WELDER SHALL BE QUALIFIED USING THIS PROCEDURE AS WITNESSED BY THE PROJECT STRUCTURAL STEEL TESTING LABORATORY.
3. ALL METAL DECKS SHALL BE DESIGNED FOR AT LEAST THE CONDITIONS SHOWN ON THE DRAWINGS. METAL DECK SHALL BE MANUFACTURER'S STANDARD OF TYPE, MINIMUM GAUGE, AND SECTION INDICATED ON THE DRAWINGS. SECTION PROPERTIES SHALL BE COMPUTED IN ACCORDANCE WITH A.I.S.I. "SPECIFICATION FOR THE DESIGN OF LIGHT GAUGE COLD FORMED STEEL STRUCTURAL MEMBERS" (LATEST EDITION). THE METAL DECK SHALL BE DESIGNED TO BE CONTINUOUS OVER THREE (3) SPANS AND SHALL SATISFY LOAD AND DEFLECTION REQUIREMENTS. SINGLE AND DOUBLE SPANS, IF REQUIRED, SHALL ALSO SATISFY LOAD AND DEFLECTION REQUIREMENTS.
4. THE FABRICATOR/ERECTOR SHALL PROVIDE ENGINEERING CALCULATIONS OR PUBLISHED MANUFACTURER'S DATA TO FERMILAB FOR REVIEW. PROVIDE ENGINEERED SHOP DRAWINGS CHECKED BY THE SUBCONTRACTOR INDICATING LOCATION, GAUGE, AND SIZE OF EACH PIECE OF DECKING. THE DRAWINGS SHALL CLEARLY SHOW WELDING DETAILS TO STRUCTURAL FRAMING AND SIDE LAP CONNECTION DETAILS. THE SHOP DRAWINGS SHALL CLEARLY SHOW ALL EDGE CLOSURES.
5. NO LOADS SHALL BE PERMITTED TO BE HUNG FROM ANY METAL DECKING. ALL DUCTWORK, PIPING, ETC. SHALL BE HUNG DIRECTLY FROM STRUCTURAL STEEL WORK OR SUPPLEMENTARY STEEL MEMBER OR ANCHORS EMBEDDED IN THE CONCRETE. ALL HANDING LOAD DETAILS SHALL BE SUBMITTED FOR REVIEW.

CONSTRUCTION DETAILS

1. SUBCONTRACTOR MUST CHECK WITH ARCHITECTURAL, MECHANICAL, AND ELECTRICAL DRAWINGS AND VERIFY THE SIZE AND LOCATION OF OPENINGS, SLEEVES, CHASES, CONDUIT, DEPRESSED AREAS, FLOOR FINISHES, FILLS, ANCHORS, PRECAST, STONE AND MASONRY DETAILS, HANGERS, CURBS, AND OTHER MISCELLANEOUS ITEMS CONNECTED WITH CONCRETE CONSTRUCTION BEFORE PLACING CONCRETE. SUBMIT SLEEVE AND EMBEDDED ITEM SHOP DRAWINGS FOR REVIEW BEFORE PLACING CONCRETE.
2. WHERE MONOLITHIC OR INTEGRAL FINISH IS CALLED FOR ON THE DRAWINGS, DEPTH MUST BE MEASURED FROM FINISHED FLOOR.
3. WHERE FLOOR IS DEPRESSED FOR FINISHES AS SHOWN ON THE DRAWINGS, THE DEPTH OF THE SLABS AND BEAMS MUST BE MEASURED FROM THE DEPRESSED AREA.
4. THE SIZE AND LOCATION OF OPENINGS THROUGH SLABS AND WALLS AS SHOWN ON THE STRUCTURAL DRAWINGS SHALL NOT BE CHANGED WITHOUT THE APPROVAL OF FERMILAB. ALL OPENINGS NOT SHOWN ON THE STRUCTURAL DRAWINGS INCLUDING PIPE SLEEVES AND CORED HOLES MUST BE SUBMITTED TO AND APPROVED BY FERMILAB BEFORE PROCEEDING WITH WORK.
5. FOR LINTELS OVER EXTERIOR AND INTERIOR OPENINGS SEE ARCHITECTURAL DRAWINGS. LOOSE LINTELS TO HAVE A MINIMUM END BEARING OF 8".
6. LOCATION OF CONSTRUCTION JOINTS IS TO BE APPROVED BY FERMILAB.
7. NO HORIZONTAL CONSTRUCTION JOINTS WILL BE ALLOWED UNLESS SHOWN ON THE STRUCTURAL DRAWINGS.
8. ALL DESIGN AND CONSTRUCTION MUST CONFORM TO THE INTERNATIONAL BUILDING CODE, 2012 EDITION AND ALL APPLICABLE LOCAL CODES.
9. NO CONDUIT OF ANY KIND SHALL BE EMBEDDED IN CONCRETE CONSTRUCTION WITHOUT WRITTEN APPROVAL OF FERMILAB.

CONCRETE MASONRY

1. MASONRY UNIT STRENGTHS SHALL BE AS FOLLOWS (PSI):

HOLLOW MASONRY UNITS	1900 PSI	(ASTM C90-N,I)
HOLLOW UNIT MASONRY (ASSY.)	1350 PSI	
GROUTED HOLLOW UNIT MASONRY (ASSY.)	1500 PSI	
MORTAR TYPE S	1800 PSI	(ASTM C270)
GROUT	2000 PSI	(ASTM C476)
REINFORCING BARS	60,000 PSI	(ASTM A615)
COLD DRAWN STEEL WIRE	70,000 PSI	(ASTM A82)

2. DESIGN IS BASED ON VALUES AS PUBLISHED IN THE "BUILDING CODE REQUIREMENTS FOR CONCRETE MASONRY STRUCTURES" (ACI-530 / ASCE-5 / TMS-402, LATEST EDITIONS).
3. ALL HOLLOW UNIT BLOCK COMPRESSION TEST STRENGTHS REQUIRED TO ACHIEVE THE f'm STATED ABOVE SHALL BE ACCORDING TO "SPECIFICATIONS FOR MASONRY STRUCTURES" (ACI-530 / ASCE-6 / TMS-602, LATEST EDITIONS) BASED ON STRENGTHS BY THE UNIT STRENGTH METHOD SECTION 1.6.
4. MASONRY WALLS SHALL HAVE CONTROL JOINTS AT A MAXIMUM OF 30 FEET UNLESS OTHERWISE NOTED.
5. PROVIDE DOWELS BETWEEN FOUNDATIONS & WALLS EQUAL TO THE SIZE & SPACING OF THE VERTICAL REINFORCING UNLESS OTHERWISE NOTED.
6. PROVIDE 9 GA. HORIZONTAL JOINT REINFORCEMENT EVERY COURSE IN STACK BOND WALLS & EVERY OTHER COURSE IN RUNNING BOND WALLS.
7. REINFORCEMENT SPLICED SHALL BE A MINIMUM OF 48 BAR DIAMETERS FOR TENSION SPLICES & 30 BAR DIAMETERS FOR COMPRESSION SPLICES. ALL SPLICES SHALL MEET TENSION REQUIREMENTS UNLESS OTHERWISE NOTED.
8. PROVIDE CONTINUOUS BOND BEAM REINFORCEMENT WITH 2-#4 BARS, OR AS NOTED. DISCONTINUE BARS AT CONTROL JOINTS UNLESS OTHERWISE NOTED.
9. ALL NONBEARING MASONRY WALLS SHALL BE PROVIDED WITH VERTICAL SLIP CONNECTIONS AT THE TOP OF THE WALL.
10. PROVIDE #5@40" VERTICAL REINFORCEMENT @ EXTERIOR CMU WALLS UNLESS OTHERWISE NOTED.
11. FULLY GROUT ALL CELLS CONTAINING REINFORCEMENT.
12. PROVIDE DOWELS EXTENDING 2' INTO THE CMU WALL AND FOUNDATION WALL TO MATCH VERTICAL SIZE AND SPACING.

DESIGN DETAILS

1. MEZZANINE FLOOR
   DEAD LOADS:
   - 2" METAL GRATING — 15 PSF
   - SUSPENDED LIGHTS & DUCTS — 10 PSF

   LIVE LOADS:
   - COMPUTER USE — 100 PSF
2. FIRST FLOOR
   DEAD LOADS:
   - 6" SLAB ON GRADE — 75 PSF
   - 8" SLAB ON GRADE AT LOADING DOCK — 100 PSF
   - 36" STACKED SHIELDING — 450 PSF

   LIVE LOADS:
   - TYPICAL — 100 PSF
   - LOADING DOCK — 250 PSF
3. TYPICAL ROOF
   DEAD LOADS:
   - 3" METAL DECK — 5 PSF
   - ROOFING & INSULATION — 10 PSF
   - LIGHTS, DUCTS, & SPRINKLERS — 5 PSF
   - MISCELLANEOUS — 5 PSF

   LIVE LOADS:
   - FLAT ROOF SNOW LOAD — 30 PSF
   - DRIFT — SEE DIAGRAM
4. ENTRY ROOF AND CANOPY
   DEAD LOADS:
   - 1-1/2" METAL DECK — 3 PSF
   - ROOFING AND INSULATION — 10 PSF
   - LIGHTS, DUCTS & SPRINKLERS — 5 PSF
   - MISCELLANEOUS — 5 PSF

   LIVE LOADS:
   - FLAT ROOF SNOW — 30 PSF
   - DRIFT — SEE DIAGRAM
5. WALLS
   EXTERIOR:
   - CURTAIN WALL & METAL PANEL (VERT. SURFACE) — 10 PSF
6. HANDRAILS:
   50 PLF UNIFORM LOAD APPLIED IN ANY DIRECTION OR 200 LB. CONCENTRATED LOAD APPLIED IN ANY DIRECTION
   GUARDRAILS:
   50 PLF UNIFORM LOAD APPLIED HORIZONTALLY AT GUARD HEIGHT PLUS A SIMULTANEOUS 100 PLF UNIFORM LOAD APPLIED VERTICAL DOWNWARD AT TOP GUARD OR 200 LB. CONCENTRATED LOAD APPLIED IN ANY DIRECTION AT ANY POINT ON THE TOP RAIL.
   GUARD IN FILL AREA:
   200 LB. HORIZONTAL FORCE APPLIED ON A 1'-0"x1'-0" AREA AT ANY POINT (NOT TO BE APPLIED SIMULTANEOUSLY WITH GUARDRAIL FORCES.)

DESIGN DETAILS (CONTINUED)

7. STAIRS AND LANDINGS (TYP.)
   - DEAD LOAD — 40 PSF
   - LIVE LOAD — 100 PSF
   - CONCENTRATED LOAD OF 300 POUNDS AT CENTER OF TREADS
8. FLOORS SHALL BE DESIGNED TO SUPPORT A CONCENTRATED LOAD OF 2000 POUNDS APPLIED TO AN AREA 2'-6"x2'-6".
9. DESIGN LIVE LOAD REDUCTIONS SHALL BE IN ACCORDANCE WITH THE 2012 INTERNATIONAL BUILDING CODE.
10. TEMPERATURE DIFFERENTIAL = +/- 70°F. (MINIMUM)
11. LATERAL LOADS:
    - EARTH PRESSURE (RETAINING WALL) — 50 PCF
    - EARTH PRESSURE (RESTRAINED WALL) — 70 PCF
    - SURCHARGE — 200 PSF
12. WIND LOAD
    BUILDING STRUCTURE:
    - AVERAGE — 36 PSF

    COMPONENTS AND CLADDING:
    1. 34 PSF INWARD
    2. 37 PSF OUTWARD EXCEPT WITHIN 15'-0" OF BUILDING CORNERS
    3. 45 PSF OUTWARD WITHIN 15'-0" OF ALL BUILDING CORNERS
    4. ROOF UPLIFT: (A>/=100 SF)
       32 PSF IN MAIN FIELD
       43 PSF AT EDGES (15'-0" WIDE)
       51 PSF WITHIN 15'-0" OF CORNERS
13. SEISMIC LOAD
    - SITE CLASS: — D
    - DESIGN CATEGORY: — B
    - IMPORTANCE FACTOR: — 1.0
    - RESPONSE MODIFICATION FACTOR, R: — 3.25
    - SEISMIC RESPONSE COEFFICIENT, C: — 0.05138
    - Av — 0.05
    - Aa — 0.05

SNOW DRIFT DIAGRAMS (SEE SHEET S-1)

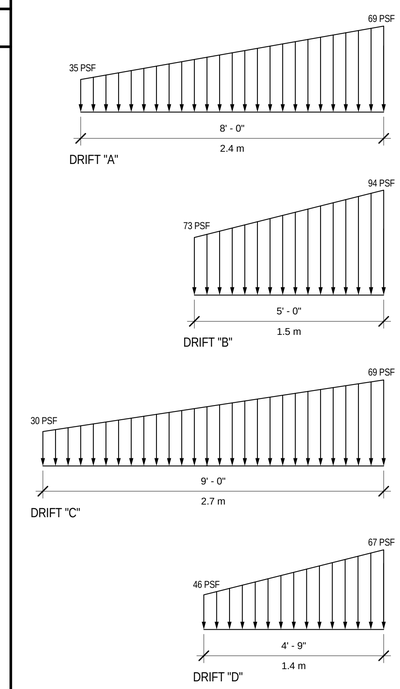

NOT FOR CONSTRUCTION

REV.	DATE	DESCRIPTION
5	03/02/15	ISSUED FOR 90% REVIEW
4	02/23/15	ISSUED FOR 90% COST ESTIMATE
3	01/26/15	ISSUED FOR 60% REVIEW

REVISIONS

HOLABIRD & ROOT
140 South Dearborn Chicago, IL 60603
Tel: 312 357 1771 Fax: 312 357 1909
www.holabird.com

	FERMI LAB	DATE
DESIGNED		
DRAWN	N.PALL	03/02/2015
CHECKED		
APPROVED		
SUBMITTED		

SCALE:

FERMI NATIONAL ACCELERATOR LABORATORY
UNITED STATES DEPARTMENT OF ENERGY

SBN FAR DETECTOR BUILDING
STRUCTURAL GENERAL NOTES

DRAWING NO. 6-7-93 S-0 REV. 5

02 MAR. 2015

C:\Users\Matt_BI\Desktop\Revit Locals\15592_SBN_Far_Detector_blewittm.rvt
3/2/2015 6:48:49 PM

ABBREVIATIONS

AB	ANCHOR BOLT
ADD	ADDENDUM
ADD'L	ADDITIONAL
AGG	AGGREGATE
ALT	ALTERNATE
ANCH	ANCHOR(AGE)
APROX	APPROXIMATE
ARCH	ARCHITECT(URAL)
AVG	AVERAGE
BLDG	BUILDING
BM	BEAM
BOTT	BOTTOM
BRG	BEARING
BS	BOTH SIDES
BSMT	BASEMENT
CEM	CEMENT
CF	CUBIC FOOT
CL	CENTER LINE
CLR	CLEAR (COVER)
CMU	CONC MAS UNIT
COL	COLUMN
COMP	COMPOSITE
CONC	CONCRETE
CONN	CONNECTION
CONST	CONSTRUCTION
CONT	CONTINUE, CONTINUOUS
CONTR	CONTRACT(OR)
CU	CUBIC
CY	CUBIC YARD
DBL	DOUBLE
DEG	DEGREE
DIA	DIAMTER
DIAG	DIAGONAL
DIM	DIMENSION
DL	DEAD LOAD
DTL	DETAIL
DWG	DRAWING
DWL	DOWEL
E	EAST
EA	EACH
EF	EACH FACE
EL	ELEVATION
EQ	EQUAL
EW	EACH WAY
EXG	EXISTING
EXP	EXPANSION
EXT	EXTERIOR
FIN	FINISH(ED)
FLR	FLOOR(ING)
FND	FOUNDATION
FP	FIREPROOF(ING)
FS	FAR SIDE
FT	FEET
FTG	FOOTING
GA	GAGE
GC	GENERAL CONTRACTOR
HORIZ	HORIZONTAL
HP	HIGH POINT
HT	HEIGHT
ID	INSIDE DIAMETER
IN	INCH
INCL	INCLUDE(D)(ING)
INFO	INFORMATION
INT	INTERIOR
JT	JOINT
K	KIPS
KSF	KIPS PER SQ. FT
KSI	KIPS PER SQ. IN
L	LENGTH
LAT	LATERAL
LB	POUND
LIN	LINEAR
LL	LIVE LOAD
LLH	LONG LEG HORIZ
LLV	LONG LEG VERT
LW	LIGHTWEIGHT
LWC	LIGHTWEIGHT CONCRETE
M	MOMENT
MAS	MASONRY
MAX	MAXIMUM
MC	MOMENT CONN
MECH	MECHANIC(AL)
MIN	MINIMUM
MISC	MISCELLANEOUS
MTL	METAL
N	NORTH
NO	NUMBER
NOM	NOMINAL
NS	NEAR SIDE
NTS	NOT TO SCALE
NWC	NORMAL WEIGHT CONCRETE
OC	ON CENTER
OD	OUTSIDE DIAMETER
OH	OPPOSITE HAND
OPG	OPENING
OPP	OPPOSITE
PAR	PARALLEL
PC	PRECAST CONCRETE
PCF	POUNDS PER CUBIC FOOT
PEN	PENETRATION
PERP	PERPENDICULAR
PL	PLATE
PL	PROPERTY LINE
PLBG	PLUMBING
PLF	POUNDS PER LINEAR FOOT
PNT	PAINT(ED)
PSF	POUNDS PER SQUARE FOOT
PSI	POUNDS PER SQUARE INCH
PT	POINT
PRES	PRESSURE
QTY	QUANTITY
RAD	RADIUS
REF	REFERENCE
REINF	REINFORCE(D)(ING)(MENT)
REQ'D	REQUIRED
RET	RETURN
RND	ROUND
S	SOUTH
SC	SLIP CRITICAL
SCHED	SCHEDULE
SECT	SECTION
SHT	SHEET
SIM	SIMILAR
SP	SPECIAL
SPEC	SPECIFICATION(S)
SQ	SQUARE
STD	STANDARD
STIFF	STIFFENER
STL	STEEL
STRUC	STRUCTURE(AL)
SYM	SYMMETRY(ICAL)
T&B	TOP AND BOTTOM
T/CONC	TOP OF CONCRETE
T/SL	TOP OF SLAB
T/STL	TOP OF STEEL
TEMP	TEMPERATURE
TFE	TOP OF FOOTING ELEVATION
THK	THICKNESS
THRU	THROUGH
TOL	TOLERANCE
TYP	TYPICAL
UL	UNDERWRITER'S LABORATORY
V	SHEAR FORCE
VERT	VERTICAL
VOL	VOLUME
W	WEST
W	WIDTH, WIDE
W/	WITH
W/O	WITH OUT
WP	WORK POINT
WT	WEIGHT
WWF	WELDED WIRE FABRIC

NOT FOR CONSTRUCTION

C:\Users\Matt_B\Desktop\Revit Locals\15592_SBN_Far_Detector_blewittm.rvt

3/2/2015 6:48:50 PM

REV.	DATE	DESCRIPTION
5	03/02/15	ISSUED FOR 90% REVIEW
4	02/23/15	ISSUED FOR 90% COST ESTIMATE
3	01/26/15	ISSUED FOR 60% REVIEW

REVISIONS

HOLABIRD & ROOT
140 South Dearborn Chicago, IL 60603
Tel: 312 357 1771 Fax: 312 357 1909
www.holabird.com

	FERMI LAB	DATE
DESIGNED		
DRAWN	N.PALL	03/02/2015
CHECKED		
APPROVED		
SUBMITTED		

SCALE:

FERMI NATIONAL ACCELERATOR LABORATORY
UNITED STATES DEPARTMENT OF ENERGY

SBN FAR DETECTOR BUILDING
STRUCTURAL ABBREVIATIONS

DRAWING NO. 6-7-93 S-1 REV. 5

02 MAR. 2015

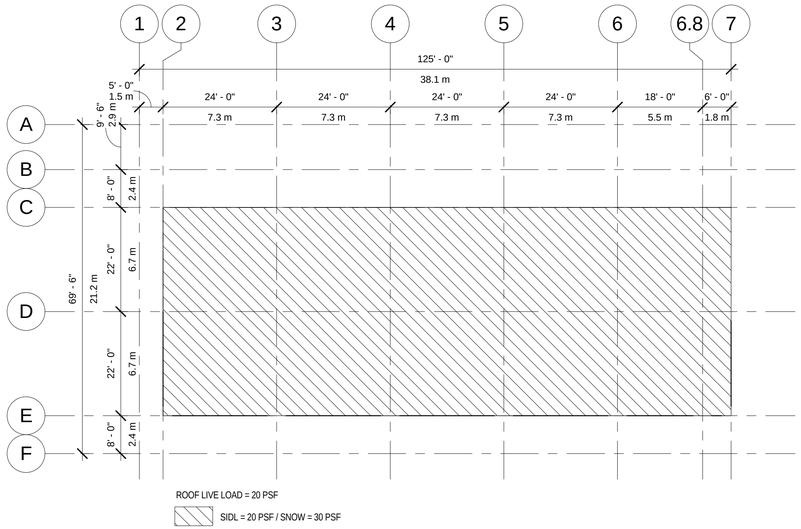

UPPER ROOF LOAD DIAGRAM 1

SCALE: 1/16" = 1'-0"

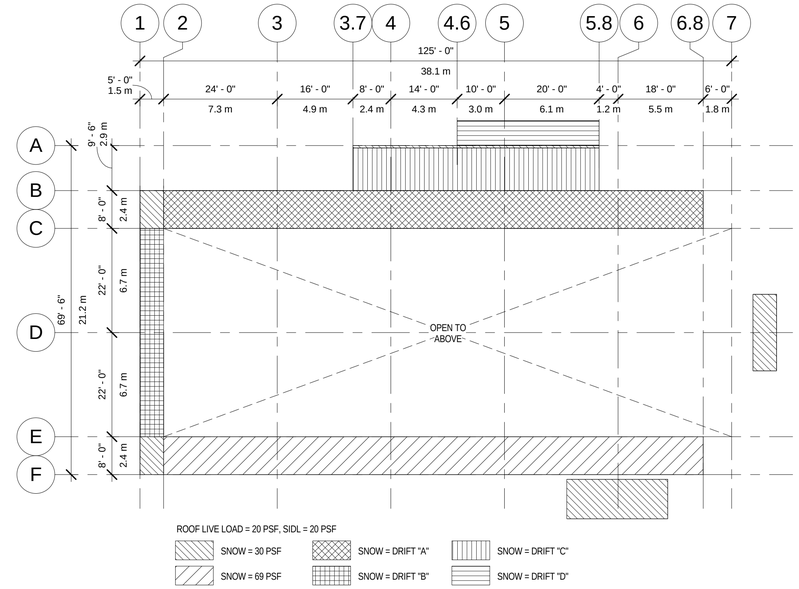

LOW ROOF LOAD DIARGAM 2

SCALE: 1/16" = 1'-0"

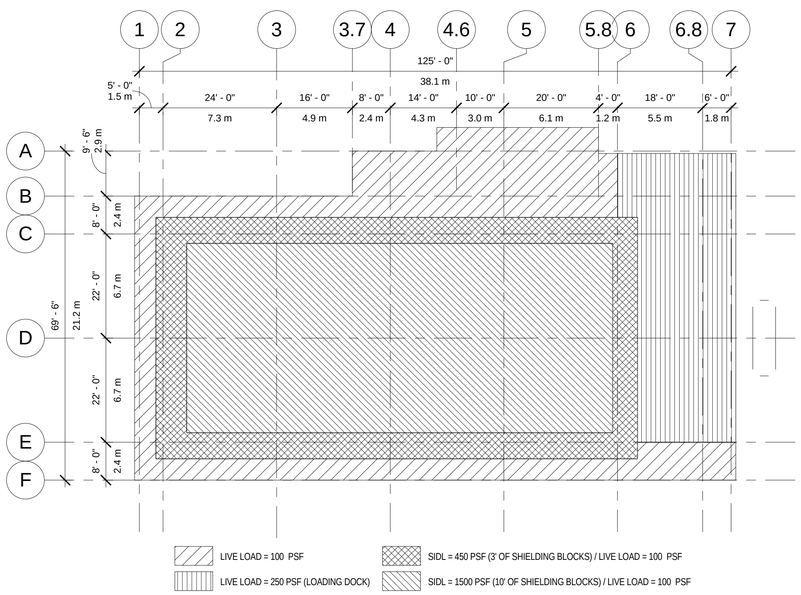

FIRST LEVEL LOAD DIAGRAM 3

SCALE: 1/16" = 1'-0"

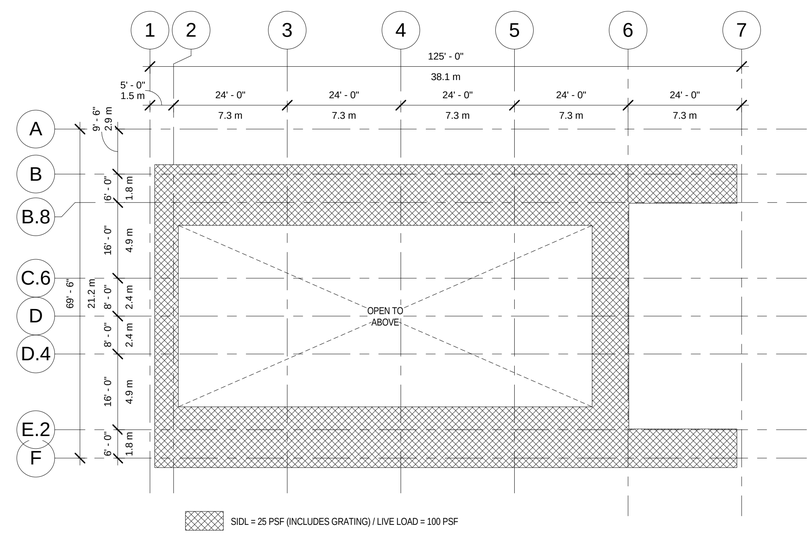

MEZZANINE LEVEL LOAD DIAGRAM 4

SCALE: 1/16" = 1'-0"

NOT FOR CONSTRUCTION

C:\Users\Matt_B\Desktop\Revit Locals\15592_SBN_Far_Detector_blewittm.rvt

3/2/2015 6:48:52 PM

REV.	DATE	DESCRIPTION
5	03/02/15	ISSUED FOR 90% REVIEW
4	02/23/15	ISSUED FOR 90% COST ESTIMATE
3	01/26/15	ISSUED FOR 60% REVIEW

REVISIONS

HOLABIRD & ROOT

140 South Dearborn Chicago, IL 60603
Tel: 312 357 1771 Fax: 312 357 1909

www.holabird.com

	FERMI LAB	DATE
DESIGNED		
DRAWN	N.PALL	03/02/2015
CHECKED		
APPROVED		
SUBMITTED		

S W E PROJECT NORTH

SCALE:

1/16"=1'-0" 8 0 8 16 24 32 40 SCALE FEET

FERMI NATIONAL ACCELERATOR LABORATORY

UNITED STATES DEPARTMENT OF ENERGY

SBN FAR DETECTOR BUILDING

STRUCTUAL LOAD DIAGRAMS

DRAWING NO. **6-7-93** **S-2** REV. **5**

02 MAR. 2015

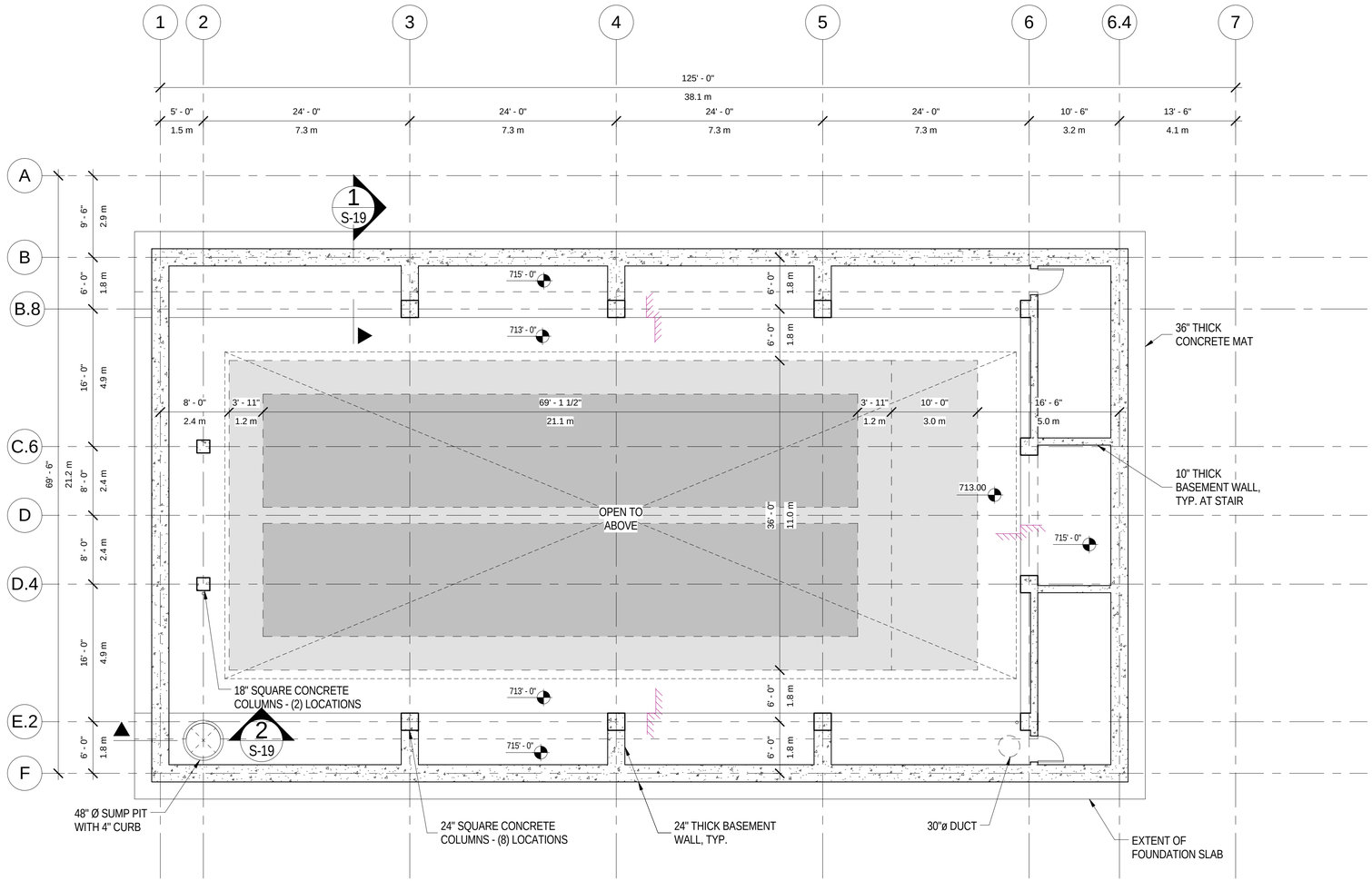

ENCLOSURE LEVEL FOUNDATION

SCALE: 1/8" = 1'-0"

NOT FOR CONSTRUCTION

C:\Users\Matt_B\Desktop\Revit Locals\15592_SBN_Far_Detector_blewittm.rvt

3/2/2015 6:48:53 PM

REV.	DATE	DESCRIPTION
5	03/02/15	ISSUED FOR 90% REVIEW
4	02/23/15	ISSUED FOR 90% COST ESTIMATE
3	01/26/15	ISSUED FOR 60% REVIEW
2	01/16/15	ISSUED FOR PRICING
1	12/23/14	SCHEMATIC DESIGN

REVISIONS

HOLABIRD & ROOT
140 South Dearborn Chicago, IL 60603
Tel: 312 357 1771 Fax: 312 357 1909
www.holabird.com

	FERMI LAB	DATE
DESIGNED		
DRAWN	N.PALL	03/02/2015
CHECKED		
APPROVED		
SUBMITTED		

S W E PROJECT NORTH

SCALE:
1/8"=1'-0"
8 0 8 16
SCALE FEET

FERMI NATIONAL ACCELERATOR LABORATORY
UNITED STATES DEPARTMENT OF ENERGY

SBN FAR DETECTOR BUILDING
ENCLOSURE LEVEL FOUNDATION PLAN

DRAWING NO. 6-7-93 S-3 REV. 5

02 MAR. 2015

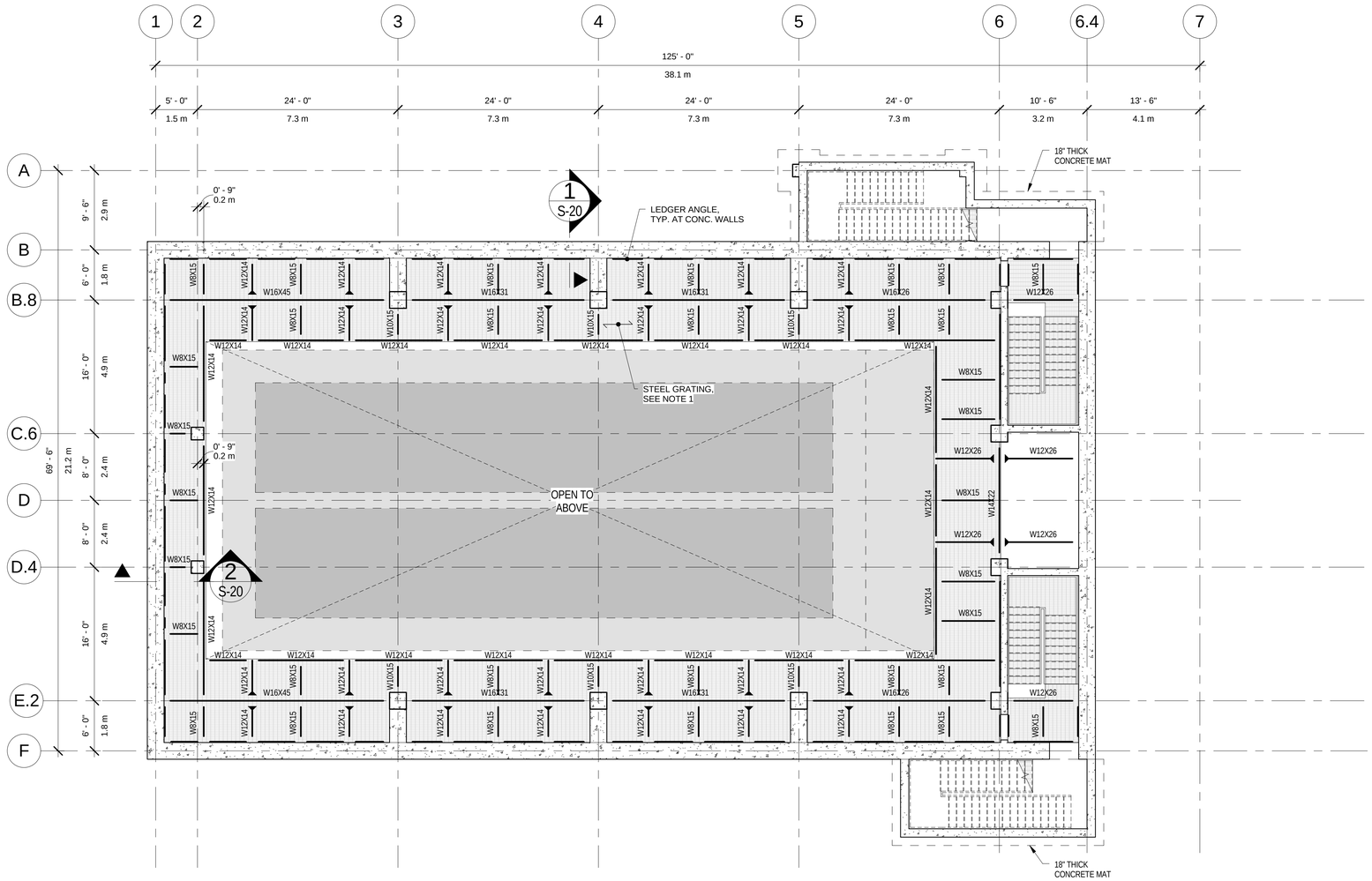

MEZZANINE LEVEL FRAMING

SCALE: 1/8" = 1'-0"

NOTES:

1. PROVIDE 2" METAL GRATING.
   T/GRATING EL. = 727'-0"
2. WHERE DIMENSION LINES TO MEMBERS ARE NOT SHOWN, MEMBERS ARE INTENDED TO BE EQUALLY SPACED BETWEEN NEAREST DIMENSIONED MEMBERS (OR COLUMN LINES).
3. T/STEEL = 726'-10" (U.N.O.)

NOT FOR CONSTRUCTION

C:\Users\Matt_Bl\Desktop\Revit Locals\15592_SBN_Far_Detector_blewittrn.rvt

3/2/2015 6:48:54 PM

REV.	DATE	DESCRIPTION
5	03/02/15	ISSUED FOR 90% REVIEW
4	02/23/15	ISSUED FOR 90% COST ESTIMATE
3	01/26/15	ISSUED FOR 60% REVIEW
2	01/16/15	ISSUED FOR PRICING

REVISIONS

HOLABIRD & ROOT
140 South Dearborn Chicago, IL 60603
Tel: 312 357 1771 Fax: 312 357 1909
www.holabird.com

	FERMI LAB	DATE
DESIGNED		
DRAWN	N.PALL	03/02/2015
CHECKED		
APPROVED		
SUBMITTED		

S W E PROJECT NORTH

SCALE:
1/8"=1'-0"
8 0 8 16
SCALE FEET

FERMI NATIONAL ACCELERATOR LABORATORY
UNITED STATES DEPARTMENT OF ENERGY

SBN FAR DETECTOR BUILDING
MEZZANINE LEVEL FRAMING PLAN

DRAWING NO. **6-7-93** **S-4** REV. **5**

02 MAR. 2015

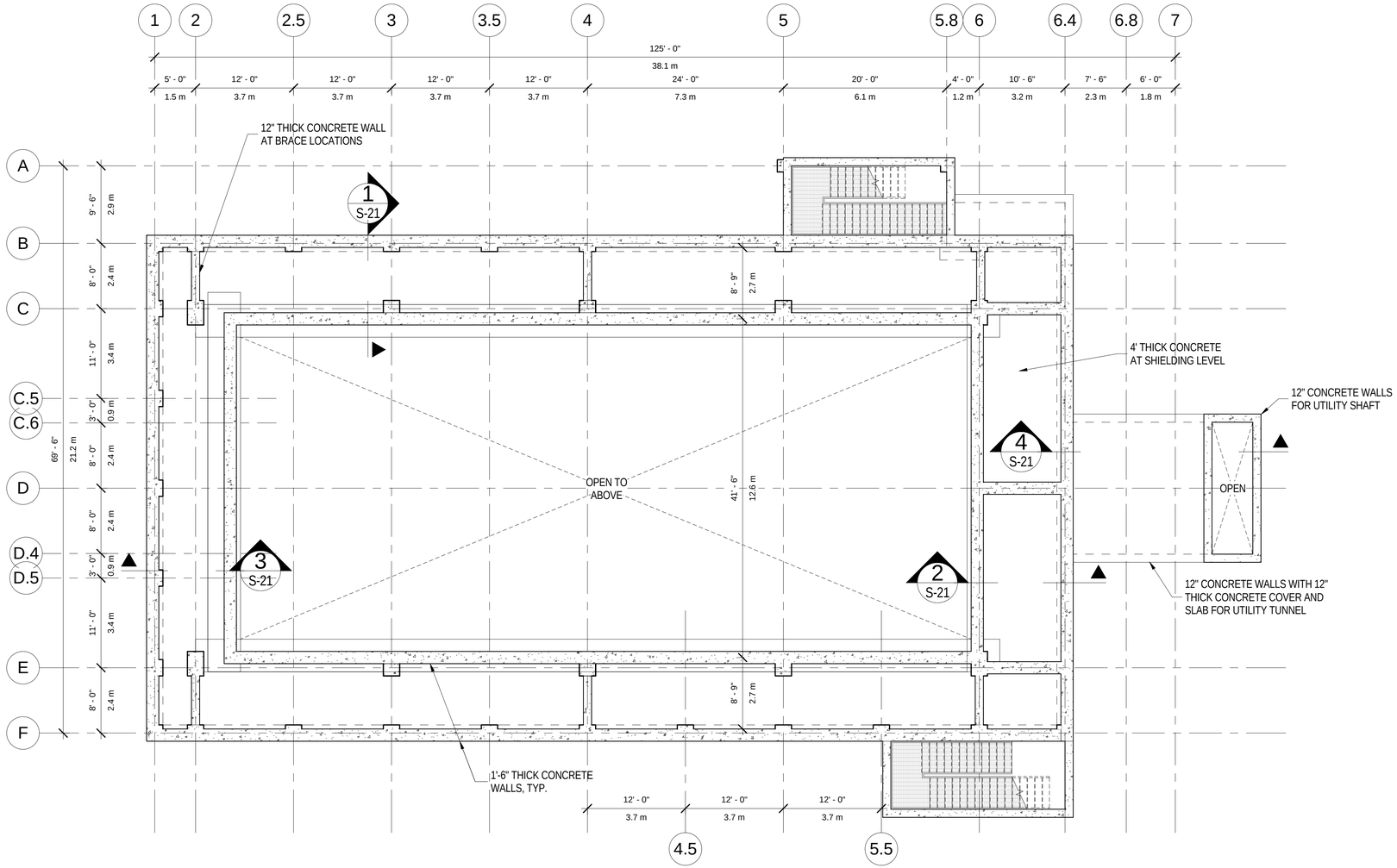

SHIELDING LEVEL FRAMING

SCALE: 1/8" = 1'-0"

NOT FOR CONSTRUCTION

C:\Users\Matt_B\Desktop\Revit Locals\15592_SBN_Far_Detector_blewittm.rvt

3/2/2015 6:48:55 PM

REV.	DATE	DESCRIPTION
5	03/02/15	ISSUED FOR 90% REVIEW
4	02/23/15	ISSUED FOR 90% COST ESTIMATE
3	01/26/15	ISSUED FOR 60% REVIEW
2	01/16/15	ISSUED FOR PRICING
1	12/23/14	SCHEMATIC DESIGN

REVISIONS

HOLABIRD & ROOT
140 South Dearborn Chicago, IL 60603
Tel: 312 357 1771 Fax: 312 357 1909
www.holabird.com

	FERMI LAB	DATE
DESIGNED		
DRAWN	N.PALL	03/02/2015
CHECKED		
APPROVED		
SUBMITTED		

S W E PROJECT NORTH

SCALE:
1/8"=1'-0"
8 0 8 16
SCALE FEET

FERMI NATIONAL ACCELERATOR LABORATORY
UNITED STATES DEPARTMENT OF ENERGY

SBN FAR DETECTOR BUILDING
SHIELDING LEVEL FRAMING PLAN

DRAWING NO. 6-7-93 S-5 REV. 5

02 MAR. 2015

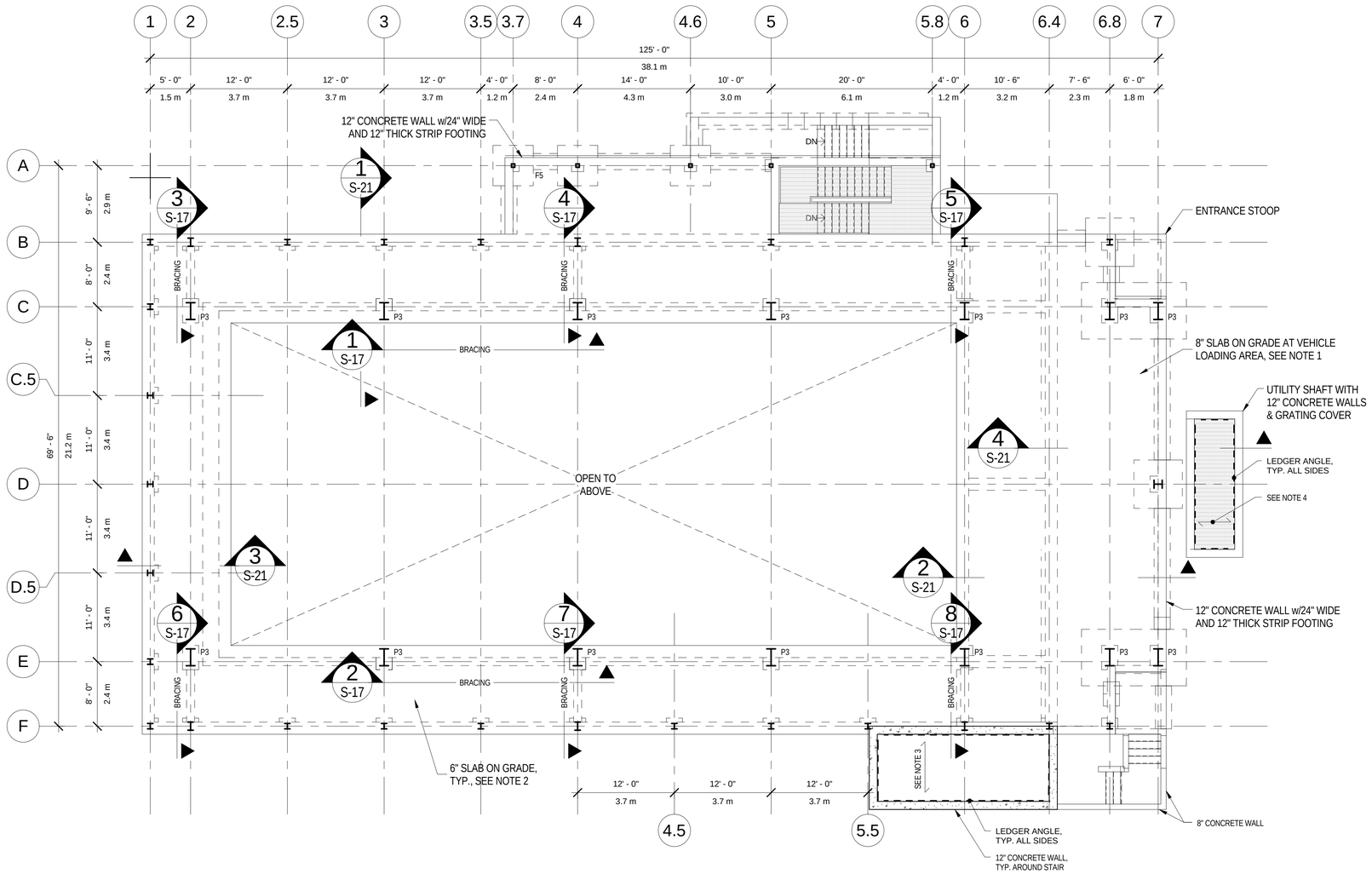

FIRST LEVEL FRAMING

SCALE: 1/8" = 1'-0"

NOTES:

1. PROVIDE 8" SLAB ON GRADE WITH #4 @ 12" O.C. E.W. TOP & BOTTOM
   T/SLAB EL. = 749'-0"
2. PROVIDE 6" SLAB ON GRADE WITH #4 @ 14" O.C. E.W.
   T/SLAB EL. = 749'-0"
3. PROVIDE 1-1/2" TYPE B ROOF DECK (16 GA. MIN.) SINGLE SPAN.
   B/DECK EL. = 751'-10 1/2"
4. PROVIDE STEEL GRATING

NOT FOR CONSTRUCTION

REV.	DATE	DESCRIPTION
5	03/02/15	ISSUED FOR 90% REVIEW
4	02/23/15	ISSUED FOR 90% COST ESTIMATE
3	01/26/15	ISSUED FOR 60% REVIEW
2	01/16/15	ISSUED FOR PRICING
1	12/23/14	SCHEMATIC DESIGN

REVISIONS

HOLABIRD & ROOT
140 South Dearborn Chicago, IL 60603
Tel: 312 357 1771 Fax: 312 357 1909
www.holabird.com

	FERMI LAB	DATE
DESIGNED		
DRAWN	N.PALL	03/02/2015
CHECKED		
APPROVED		
SUBMITTED		

S W E PROJECT NORTH

SCALE: 1/8"=1'-0" 8 0 8 16 SCALE FEET

FERMI NATIONAL ACCELERATOR LABORATORY
UNITED STATES DEPARTMENT OF ENERGY

SBN FAR DETECTOR BUILDING
FIRST LEVEL FRAMING PLAN

DRAWING NO. 6-7-93 S-6 REV. 5

02 MAR. 2015

C:\Users\Matt_Bl\Desktop\Revit Locals\15592_SBN_Far_Detector_blewittrn.rvt

3/2/2015 6:48:56 PM

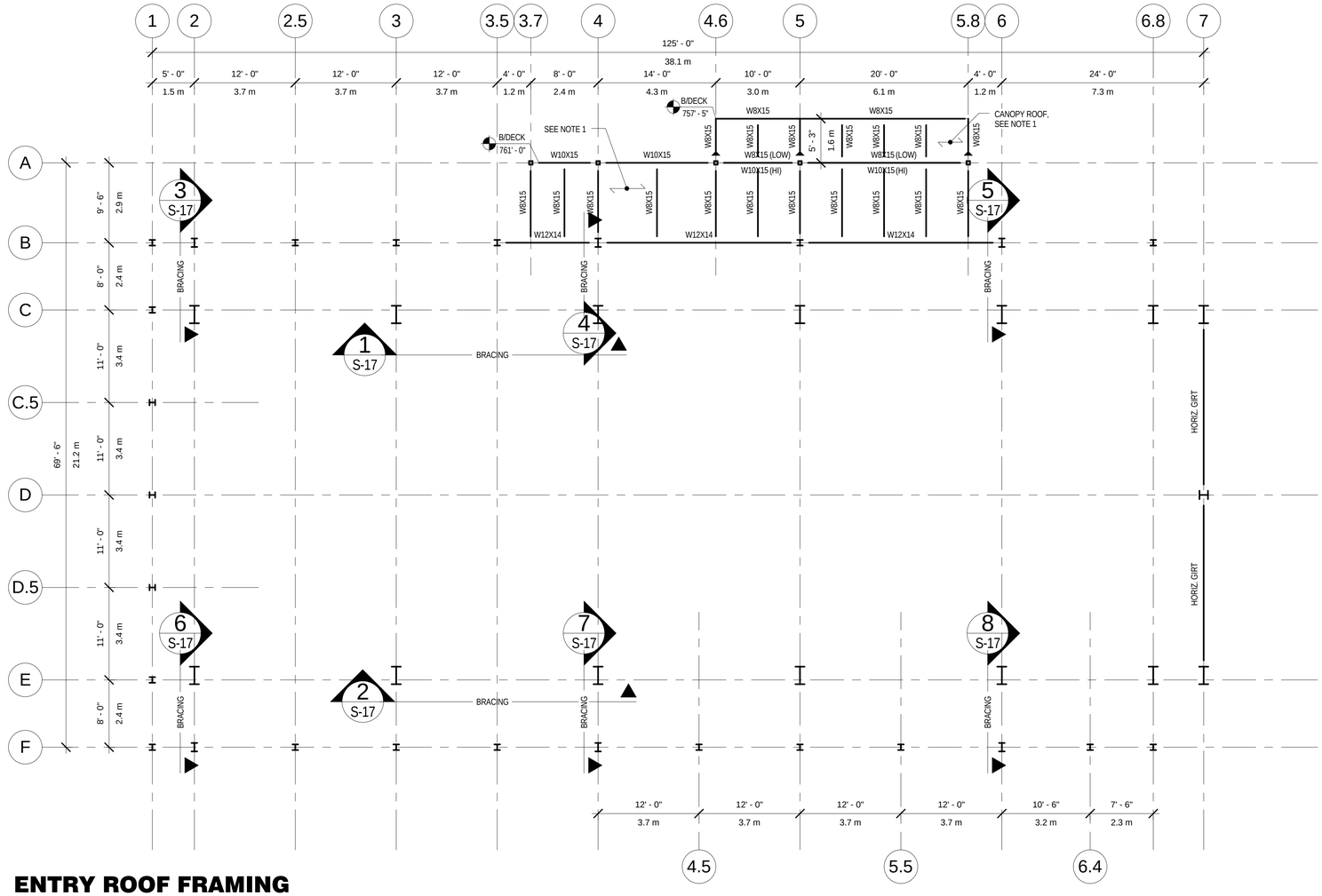

ENTRY ROOF FRAMING

SCALE: 1/8" = 1'-0"

NOTES:
1. PROVIDE 1-1/2" TYPE B ROOF DECK (18 GA. MIN.) CONT. OVER 3 SPANS MIN. B/DECK EL. VARIES. SEE PLAN FOR DECK ELEVATIONS.
2. WHERE DIMENSION LINES TO MEMBERS ARE NOT SHOWN, MEMBERS ARE INTENDED TO BE EQUALLY SPACED BETWEEN NEAREST DIMENSIONED MEMBERS (OR COLUMN LINES).

NOT FOR CONSTRUCTION

C:\Users\Matt_Bl\Desktop\Revit Locals\15592_SBN_Far_Detector_blewittm.rvt

3/2/2015 6:48:57 PM

REV.	DATE	DESCRIPTION
5	03/02/15	ISSUED FOR 90% REVIEW
4	02/23/15	ISSUED FOR 90% COST ESTIMATE
3	01/26/15	ISSUED FOR 60% REVIEW

REVISIONS

HOLABIRD & ROOT
140 South Dearborn Chicago, IL 60603
Tel: 312 357 1771 Fax: 312 357 1909
www.holabird.com

	FERMI LAB	DATE
DESIGNED		
DRAWN	N.PALL	03/02/2015
CHECKED		
APPROVED		
SUBMITTED		

S W E PROJECT NORTH

SCALE:
1/8"=1'-0"
8 0 8 16
SCALE FEET

FERMI NATIONAL ACCELERATOR LABORATORY
UNITED STATES DEPARTMENT OF ENERGY

SBN FAR DETECTOR BUILDING
ENTRY ROOF FRAMING PLAN

DRAWING NO. 6-7-93 S-7 REV. 5

02 MAR. 2015

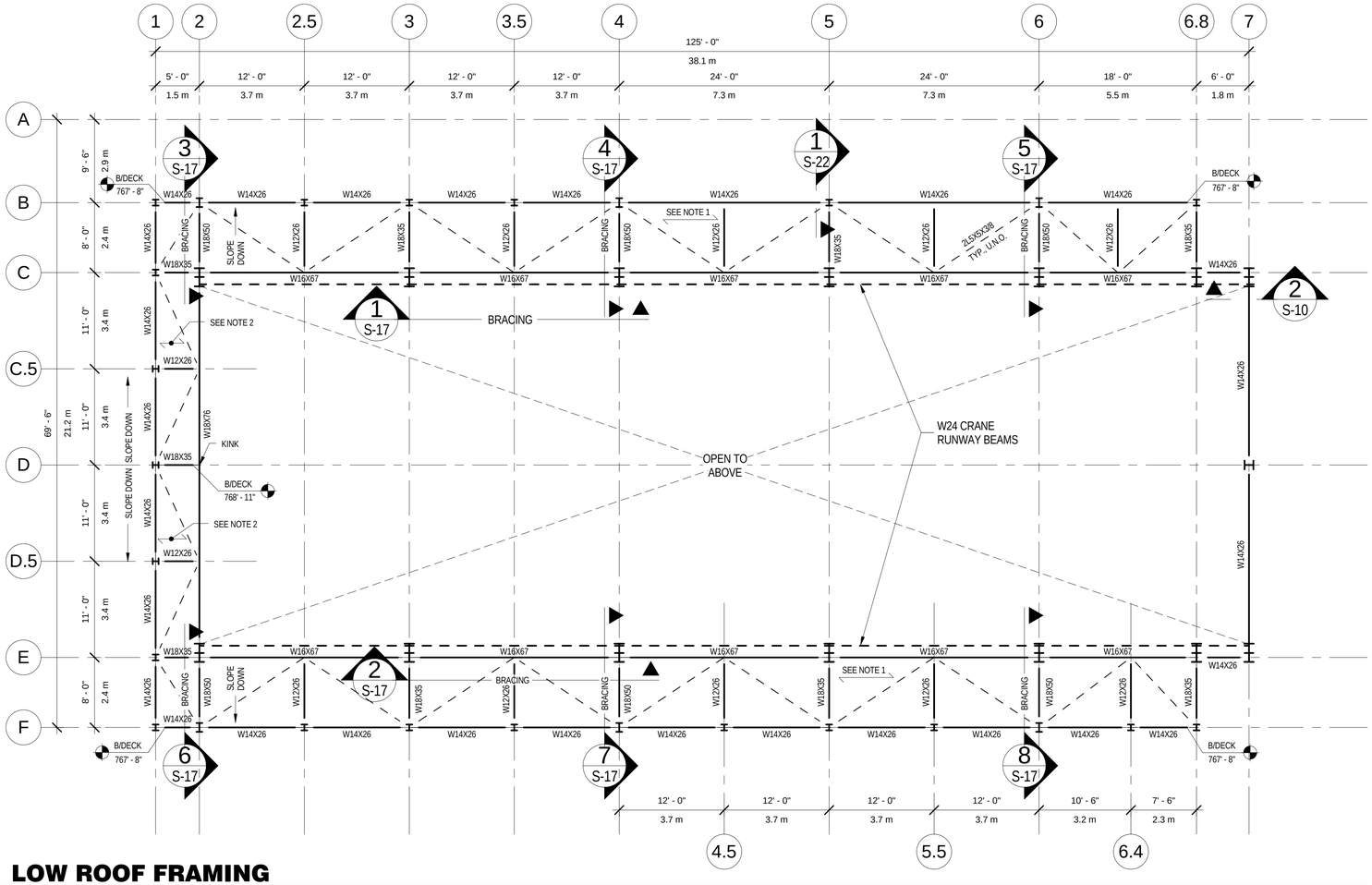

LOW ROOF FRAMING

SCALE: 1/8" = 1'-0"

NOTES:

1. PROVIDE 3" TYPE N ROOF DECK (16 GA. MIN.) CONT. OVER 3 SPANS MIN. B/DECK EL. VARIES. SEE PLAN FOR DECK ELEVATIONS.
2. PROVIDE 3" TYPE N ROOF DECK (16 GA. MIN.) SINGLE SPAN. B/DECK EL. VARIES. SEE PLAN FOR DECK ELEVATIONS.
3. WHERE DIMENSION LINES TO MEMBERS ARE NOT SHOWN, MEMBERS ARE INTENDED TO BE EQUALLY SPACED BETWEEN NEAREST DIMENSIONED MEMBERS (OR COLUMN LINES).

NOT FOR CONSTRUCTION

REV.	DATE	DESCRIPTION
5	03/02/15	ISSUED FOR 90% REVIEW
4	02/23/15	ISSUED FOR 90% COST ESTIMATE
3	01/26/15	ISSUED FOR 60% REVIEW
2	01/16/15	ISSUED FOR PRICING
1	12/23/14	SCHEMATIC DESIGN

REVISIONS

HOLABIRD & ROOT
140 South Dearborn Chicago, IL 60603
Tel: 312 357 1771 Fax: 312 357 1909
www.holabird.com

FERMI LAB		DATE
DESIGNED		
DRAWN	N.PALL	03/02/2015
CHECKED		
APPROVED		
SUBMITTED		

S W E PROJECT NORTH

SCALE: 1/8"=1'-0" 8 0 8 16 SCALE FEET

FERMI NATIONAL ACCELERATOR LABORATORY
UNITED STATES DEPARTMENT OF ENERGY

SBN FAR DETECTOR BUILDING
LOW ROOF FRAMING PLAN

DRAWING NO. 6-7-93 S-8 REV. 5

02 MAR. 2015

C:\Users\Matt_Bl\Desktop\Revit Locals\15592_SBN_Far_Detector_blewittm.rvt

3/2/2015 6:48:58 PM

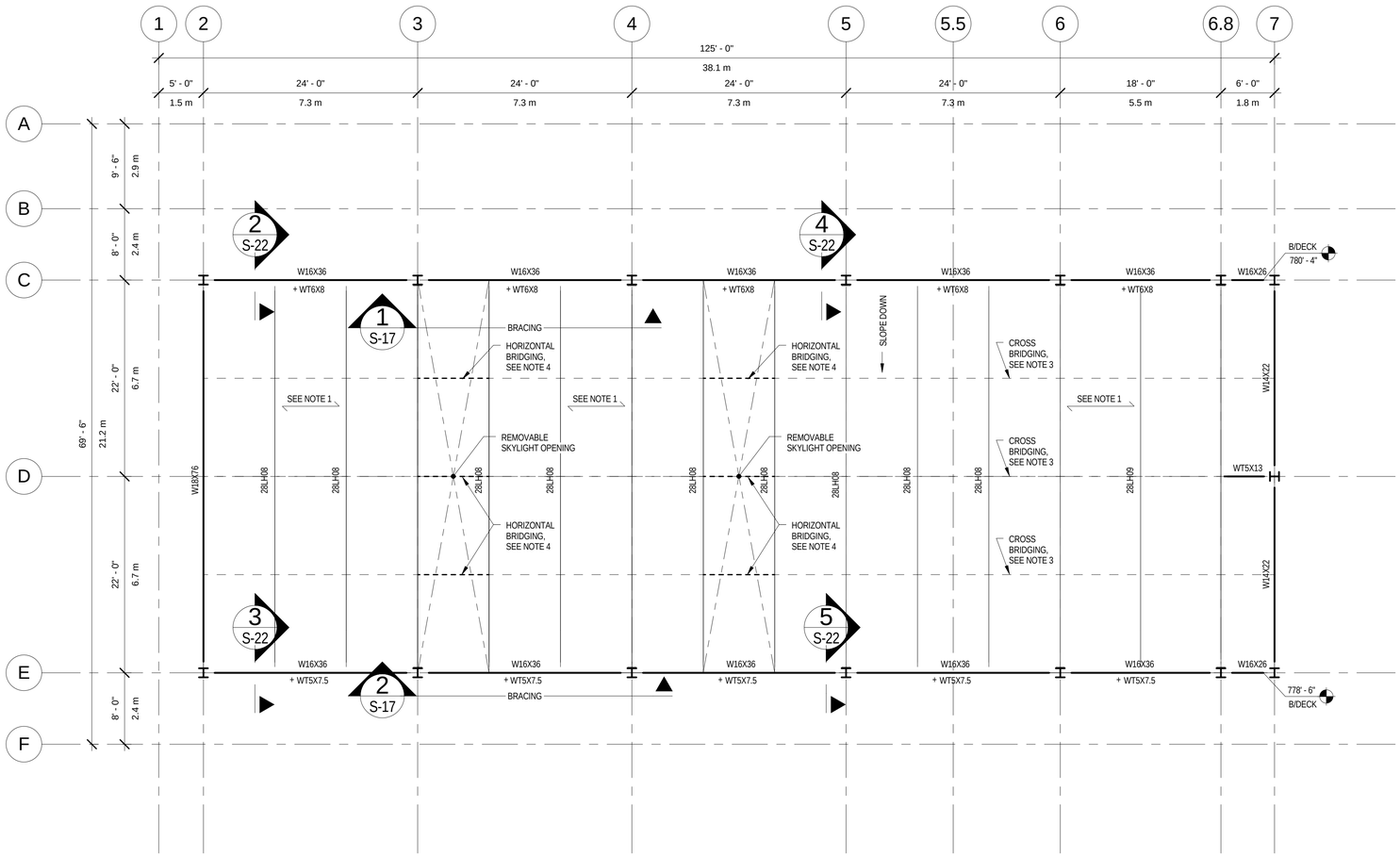

UPPER ROOF FRAMING

SCALE: 1/8" = 1'-0"

NOTES:

1. PROVIDE 3" TYPE N ROOF DECK (20 GA. MIN.) CONT. OVER 3 SPANS MIN. B/DECK EL. VARIES. SEE PLAN FOR DECK ELEVATIONS.
2. WHERE DIMENSION LINES TO MEMBERS ARE NOT SHOWN, MEMBERS ARE INTENDED TO BE EQUALLY SPACED BETWEEN NEAREST DIMENSIONED MEMBERS (OR COLUMN LINES).
3. PROVIDE BRIDGING FOR ROOF JOISTS AS SHOWN ON PLAN, OR AS REQUIRED BY SJI BRIDGING TABLES.
4. PROVIDE HORIZONTAL BRIDGING AT TOP AND BOTTOM OF JOISTS PER SJI REQUIREMENTS AT REMOVEABLE SKYLIGHT OPENINGS. HORIZONTAL BRIDGING CAN BE TEMPORARILY REMOVED DURING DETECTOR INSTALLATION BUT MUST BE REINSTALLED AFTER DETECTOR INSTALLATION IS COMPLETE.

NOT FOR CONSTRUCTION

C:\Users\Matt_B\Desktop\Revit Locals\15592_SBN_Far_Detector_blewittm.rvt

3/2/2015 6:48:58 PM

REV.	DATE	DESCRIPTION
5	03/02/15	ISSUED FOR 90% REVIEW
4	02/23/15	ISSUED FOR 90% COST ESTIMATE
3	01/26/15	ISSUED FOR 60% REVIEW
2	01/16/15	ISSUED FOR PRICING
1	12/23/14	SCHEMATIC DESIGN

REVISIONS

HOLABIRD & ROOT
140 South Dearborn Chicago, IL 60603
Tel: 312 357 1771 Fax: 312 357 1909
www.holabird.com

	FERMI LAB	DATE
DESIGNED		
DRAWN	N.PALL	03/02/2015
CHECKED		
APPROVED		
SUBMITTED		

S W E PROJECT NORTH

SCALE:
1/8"=1'-0"
8 0 8 16
SCALE FEET

FERMI NATIONAL ACCELERATOR LABORATORY
UNITED STATES DEPARTMENT OF ENERGY

SBN FAR DETECTOR BUILDING
UPPER ROOF FRAMING PLAN

DRAWING NO. **6-7-93** **S-9** REV. **5**

02 MAR. 2015

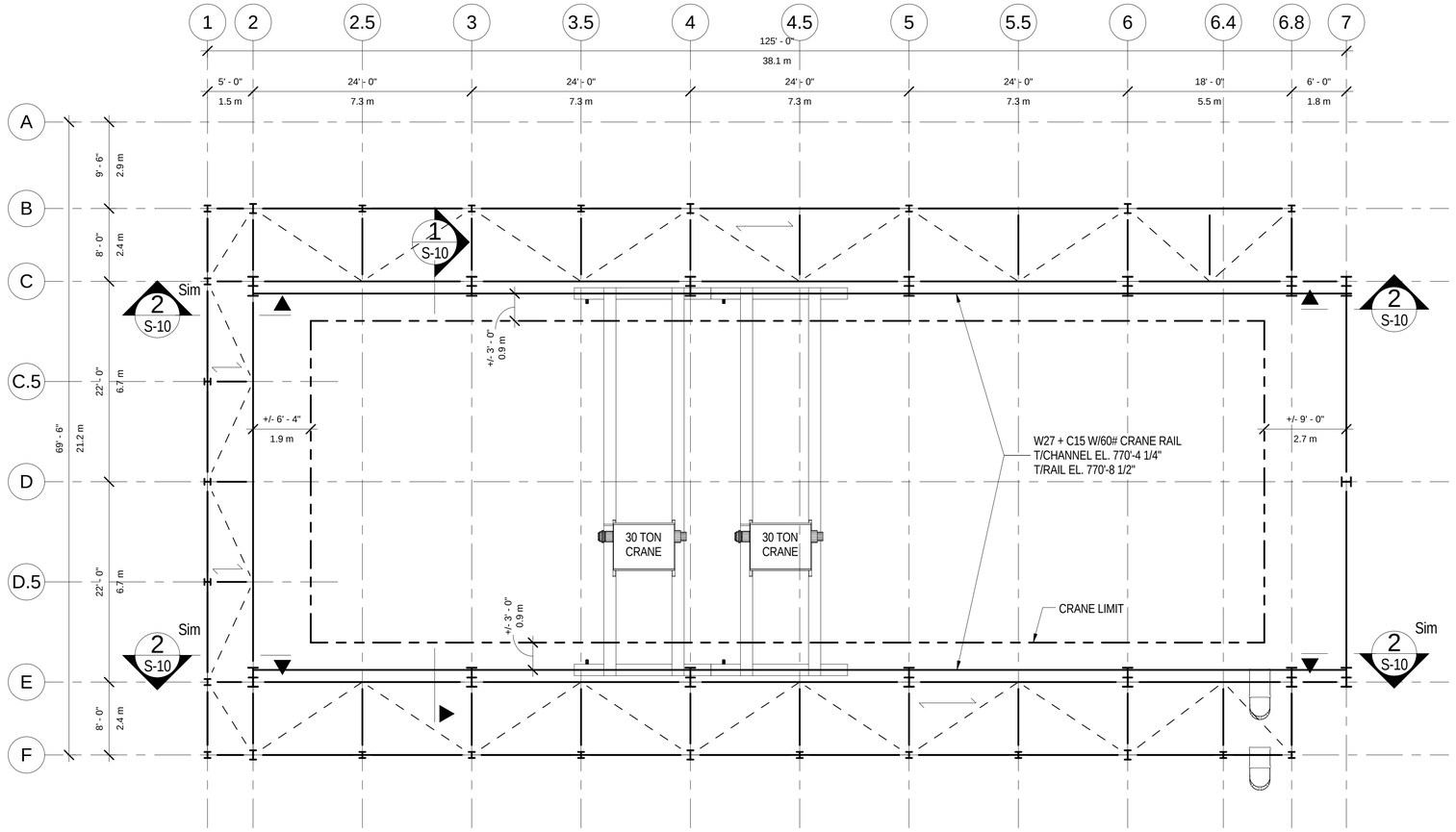

CRANE RUNWAY FRAMING

SCALE: 1/8" = 1'-0"

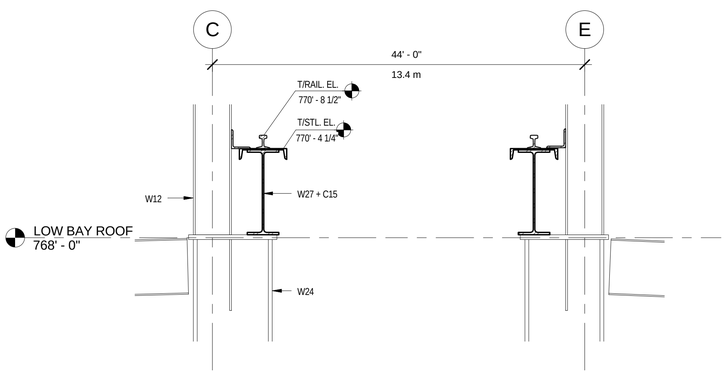

SECTION AT CRANE SUPPORTS

1

SCALE: 1/2" = 1'-0"

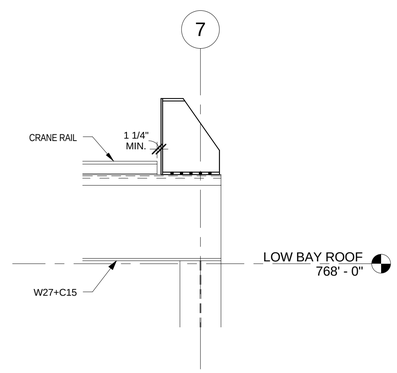

CRANE END STOP DETAIL

2

SCALE: 1/2" = 1'-0"

NOT FOR CONSTRUCTION

REV.	DATE	DESCRIPTION
5	03/02/15	ISSUED FOR 90% REVIEW
4	02/23/15	ISSUED FOR 90% COST ESTIMATE
3	01/26/15	ISSUED FOR 60% REVIEW
2	01/16/15	ISSUED FOR PRICING

REVISIONS

HOLABIRD & ROOT

140 South Dearborn Chicago, IL 60603
Tel: 312 357 1771 Fax: 312 357 1909

www.holabird.com

	FERMI LAB	DATE
DESIGNED		
DRAWN	N.PALL	03/02/2015
CHECKED		
APPROVED		
SUBMITTED		

S W E PROJECT NORTH

SCALE:

1/8"=1'-0" 8 0 8 16 SCALE FEET

1/2"=1'-0" 1 0 1 2 3 4 5 SCALE FEET

FERMI NATIONAL ACCELERATOR LABORATORY

UNITED STATES DEPARTMENT OF ENERGY

SBN FAR DETECTOR BUILDING

30t OVERHEAD CRANES - PLAN, SECTIONS AND DETAILS

DRAWING NO. **6-7-93** **S-10** REV. **5**

02 MAR. 2015

C:\Users\Matt_B\Desktop\Revit Locals\15592_SBN_Far_Detector_blewittm.rvt

3/2/2015 6:49:01 PM

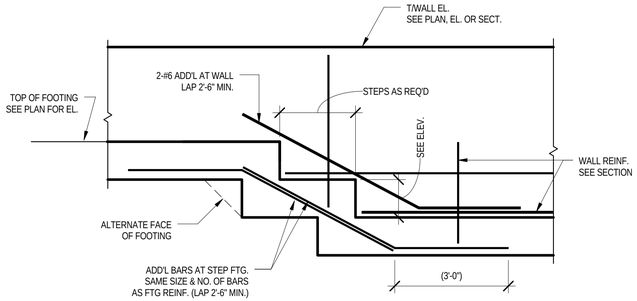

TYPICAL STEP FOOTING DETAIL

1

SCALE: 1/2" = 1'-0"

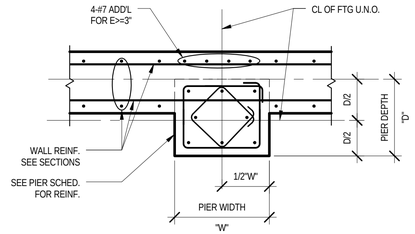

TYPICAL DETAIL OF WALL PIER

2

SCALE: 1/2" = 1'-0"

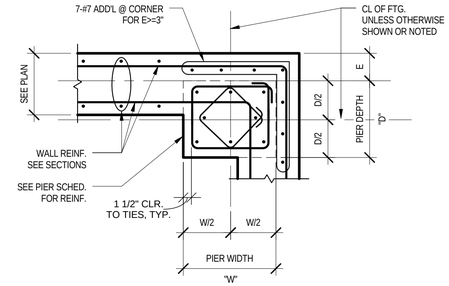

TYPICAL DETAIL-WALL PIER AT CORNER

3

SCALE: 1/2" = 1'-0"

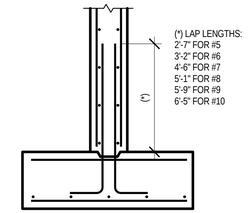

NOTE:
APPLIES TO TYPICAL FOUNDATION DOWELS.
FOR RETAINING WALLS AND OTHER CASES WITH TENSION, MULTIPLY THES VALUES BY 1.3.

TYPICAL DOWEL LENGTH AT FOUNDATION WALLS

4

SCALE: 1/2" = 1'-0"

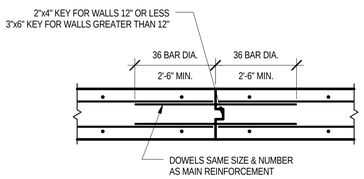

NOTE:
REINFORCING CONTINUOUS THRU CONSTRUCTION JOINTS

TYPICAL DETAIL OF VERTICAL CONSTR. JOINT AT WALL

5

SCALE: 1/2" = 1'-0"

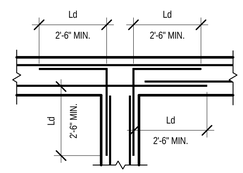

NOTE:
CORNER BAR SIZE AND SPACING, SAME AS HORIZONTAL REINFORCING

TYPICAL CORNER DETAILING FOR HORIZ. REINFORCEMENT

6

SCALE: 1/2" = 1'-0"

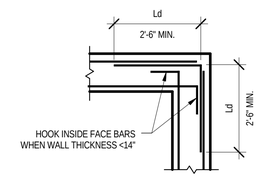

NOTE:
CORNER BAR SIZE & SPACING
SAME AS HORIZ. REINFORCEMENT

TYPICAL CORNER DETAILING FOR HORIZ. REINFORCEMENT

7

SCALE: 1/2" = 1'-0"

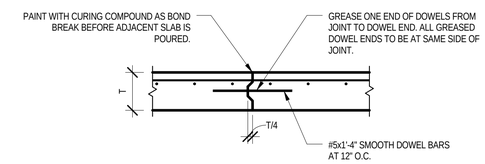

NOTE:
CONSTRUCTION JOINTS - LOCATE PER ACI 302 STRIP CAST METHOD

TYPICAL SLAB ON GRADE CONSTRUCTION JOINT

8

SCALE: 1/2" = 1'-0"

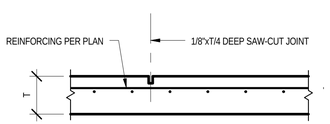

TYPICAL SLAB ON GRADE SAW-CUT CONTROL JOINT

9

SCALE: 1/2" = 1'-0"

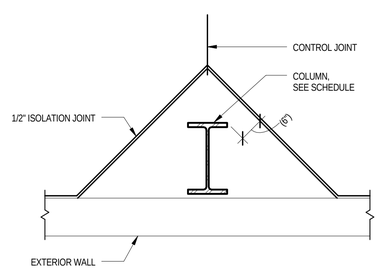

TYPICAL EXTERIOR COLUMN ISOLATION JOINT DETAIL

10

SCALE: 1/2" = 1'-0"

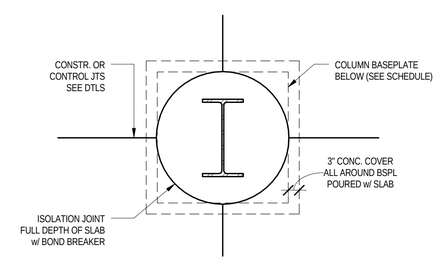

TYPICAL COLUMN ISOLATION JOINT DETAIL

11

SCALE: 1/2" = 1'-0"

NOT FOR CONSTRUCTION

REV.	DATE	DESCRIPTION
5	03/02/15	ISSUED FOR 90% REVIEW
4	02/23/15	ISSUED FOR 90% COST ESTIMATE
3	01/26/15	ISSUED FOR 60% REVIEW

REVISIONS

HOLABIRD & ROOT
140 South Dearborn Chicago, IL 60603
Tel: 312 357 1771 Fax: 312 357 1909
www.holabird.com

	FERMI LAB	DATE
DESIGNED		
DRAWN	N.PALL	03/02/2015
CHECKED		
APPROVED		
SUBMITTED		

SCALE:

FERMI NATIONAL ACCELERATOR LABORATORY
UNITED STATES DEPARTMENT OF ENERGY

SBN FAR DETECTOR BUILDING
TYPICAL CONCRETE DETAILS

DRAWING NO. 6-7-93 S-11 REV. 5

02 MAR. 2015

C:\Users\Matt_B\Desktop\Revit Locals\15592_SBN_Far_Detector_blewittm.rvt

3/2/2015 6:49:02 PM

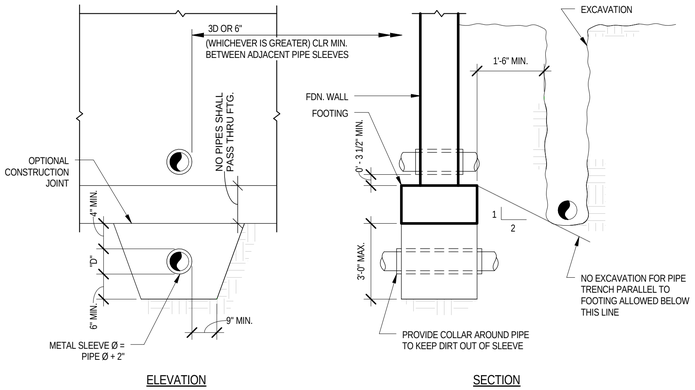

NOTES:
1. STEP FOOTING PER TPICAL STEPPED FOOTING DETAIL AS REQUIRED TO SAISFY THESE CONDITIONS.
2. GENERAL CONTRACTOR TO COORDINATE EXACT DEPTH AND LOCATION OF PIPE.
3. "D" SHALL NOT EXCEED 8".

TYPICAL DETAIL OF PIPE AT FOOTING

1

N.T.S.

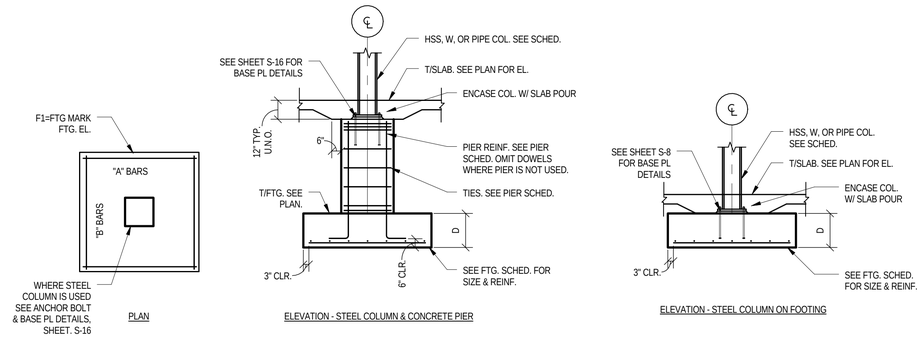

TYPICAL FOOTING DETAIL FOR STEEL COLUMN

3

N.T.S.

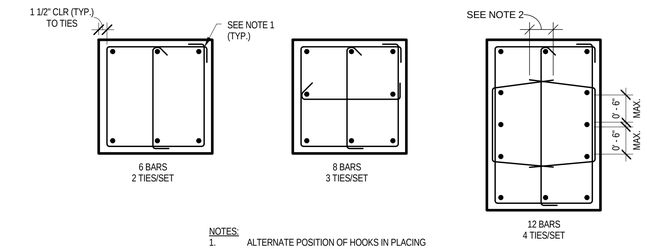

NOTES:
1. ALTERNATE POSITION OF HOOKS IN PLACING SUCCESSIVE SETS OF TIES.
2. MINIMUM LAP SHALL BE 12 IN.; FOR SIZES #5 AND LARGER, SPECIAL MINIMUM TENSION LAP LENGTHS, PER ACI 315, SHALL BE PROVIDED.

TYPICAL CONCRETE PIER TIE PATTERN

2

N.T.S.

CONCRETE PIER SCHEDULE — f'c = 4000 PSI, Fy = 60000 PSI

MARK	SIZE		REINFORCING		REMARKS
	A (in)	B (in)	VERTICAL	HORIZ.	
P1	18	18	6-#8	#4@15"	
P2	24	24	8-#8	#4@12"	
P3	24	36	12-#8	#4@15"	

NOTE: TIES TO BE @ 3" O.C. IN TOP & BOTT. 12" OF PIER

FOOTING SCHEDULE — f'c = 4000 PSI, Fy = 60000 PSI

MARK	SIZE			REINFORCING		REMARKS
	A	B	D	"A" BARS	"B" BARS	
F5	5'-0"	5'-0"	1'-6"	9-#5	9-#5	
F6	6'-0"	6'-0"	1'-6"	9-#5	9-#5	
F7	7'-0"	7'-0"	1'-6"	10-#5	10-#5	

SEE DRAWING S-11 FOR FOOTING DETAILS

NOT FOR CONSTRUCTION

REV.	DATE	DESCRIPTION
5	03/02/15	ISSUED FOR 90% REVIEW
4	02/23/15	ISSUED FOR 90% COST ESTIMATE
3	01/26/15	ISSUED FOR 60% REVIEW

REVISIONS

HOLABIRD & ROOT
140 South Dearborn Chicago, IL 60603
Tel: 312 357 1771 Fax: 312 357 1909
www.holabird.com

	FERMI LAB	DATE
DESIGNED		
DRAWN	N.PALL	03/02/2015
CHECKED		
APPROVED		
SUBMITTED		

SCALE:

FERMI NATIONAL ACCELERATOR LABORATORY
UNITED STATES DEPARTMENT OF ENERGY

SBN FAR DETECTOR BUILDING
TYPICAL CONCRETE DETAILS

DRAWING NO. 6-7-93 S-12 REV. 5

02 MAR. 2015

C:\Users\Matt_B\Desktop\Revit Locals\15592_SBN_Far_Detector_blewittm.rvt

3/2/2015 6:49:03 PM

T/ ENCLOSURE			T/ ENCLOSURE
742' - 0" MEZZANINE	24 x 24	18 x 18	742' - 0" MEZZANINE
727' - 0" B/ ENCLOSURE			727' - 0" B/ ENCLOSURE
713' - 0"			713' - 0"
Column Locations	B.8-3, B.8-4, B.8-5, B.8-6, C.6-6, D.4-6, E.2-3, E.2-4, E.2-5, E.2-6	C.6-2, D.4-2	

CONCRETE COLUMN SCHEDULE

SCALE: 1/8" = 1'-0"

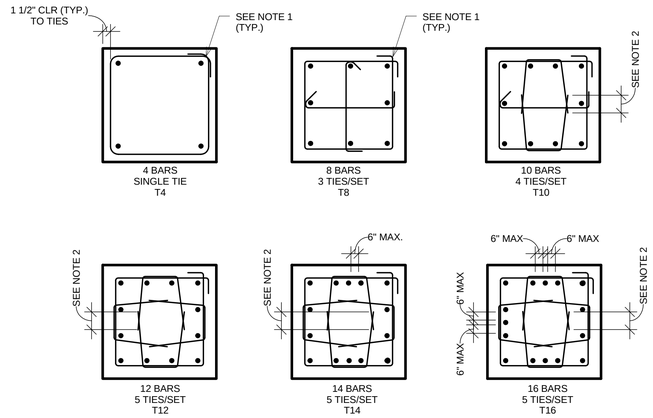

NOTES:

1. ALTERNATE POSITION OF HOOKS IN PLACING SUCCESSIVE SETS OF TIES.
2. MINIMUM LAP SHALL BE 12 IN.; FOR SIZES #5 AND LARGER, SPECIAL MINIMUM TENSION LAP LENGTHS, PER ACI 315, SHALL BE PROVIDED.

TYPICAL CONCRETE COLUMN TIE PATTERNS

N.T.S.

1

NOT FOR CONSTRUCTION

C:\Users\Matt_B\Desktop\Revit Locals\15592_SBN_Far_Detector_blewittm.rvt

3/2/2015 6:49:04 PM

REV.	DATE	DESCRIPTION
5	03/02/15	ISSUED FOR 90% REVIEW
4	02/23/15	ISSUED FOR 90% COST ESTIMATE
3	01/26/15	ISSUED FOR 60% REVIEW

REVISIONS

HOLABIRD & ROOT

140 South Dearborn Chicago, IL 60603
Tel: 312 357 1771 Fax: 312 357 1909

www.holabird.com

	FERMI LAB	DATE
DESIGNED		
DRAWN	N.PALL	03/02/2015
CHECKED		
APPROVED		
SUBMITTED		

SCALE:

3/4"=1'-0" 1 0 1 2 3 SCALE FEET

FERMI NATIONAL ACCELERATOR LABORATORY

UNITED STATES DEPARTMENT OF ENERGY

SBN FAR DETECTOR BUILDING

CONCRETE COLUMN SCHEDULE & DETAILS

DRAWING NO. 6-7-93 S-13 REV. 5

02 MAR. 2015

NO. OF BOLTS REQUIRED (7/8" Ø)	AISC CONNECTION CAPACITY (LRFD)
2	68.5 K
3	108 K
4	147 K
5	185 K
6	222 K
7	258 K
8	295 K
9	331 K

NOTES:

1. REFER TO AISC MANUAL OF STEEL CONSTRUCTION (14TH EDITION) FOR ANGLE DIMENSIONS (TABLE 10-1)
2. BEAM WEB STRENGTH MUST ALSO BE CHECKED BY THE CONTRACTOR'S CONNECTION DESIGN ENGINEER. PROVIDE WEB DOUBLER PLATES IF REQUIRED.
3. SHORT-SLOTTED HOLES TRANSVERSE TO DIRECTION OF LOAD ARE PERMITTED IN THE SUPPORT BEAM. CHECK CAPACITY PER AISC TABLE 10-1.

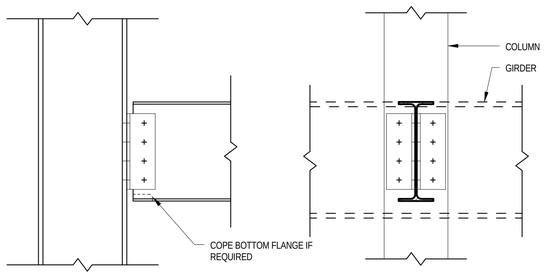

NOTE:

CONNECTION ANGLES MAY BE WELDED TO BEAM OR COLUMN - SEE AISC 14TH EDITION STEEL MANUAL, TABLE 10-2

(ALL BOLTED)

DOUBLE ANGLE CONNECTION 1

N.T.S.

BEAM SIZE	NO. OF BOLTS	AISC CONNECTION CAPACITY (LRFD)
W8	2	26.1 K
W10	2	26.1 K
W12	3	39.2 K
W14	3	39.2 K
W16	4	65.3 K
W18	4	65.3 K

BEAM SIZE	NO. OF BOLTS	AISC CONNECTION CAPACITY (LRFD)
W21	5	81.6 K
W24	6	117 K
W27	7	137 K
W30	8	181 K
W33	9	203 K
W36	9	203 K

NOTES:

1. REFER TO AISC MANUAL OF STEEL CONSTRUCTION (14TH EDITION) FOR PLATE DIMENSIONS AND WELDS (TABLE 10-109)
2. SHORT SLOTTED HOLES TRANSVERSE TO DIRECTION OF LOAD ARE PERMITTED IN THE CONNECTION PLATE.

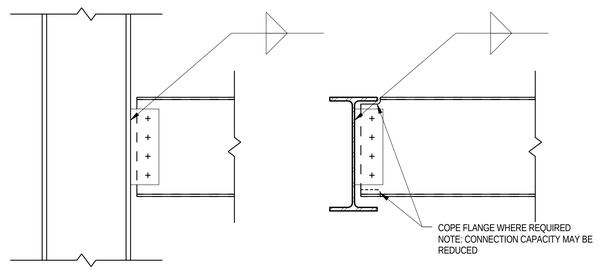

BEAM TO COLUMN FLANGE

BEAM TO BEAM

SINGLE PLATE SHEAR CONNECTION 2

N.T.S.

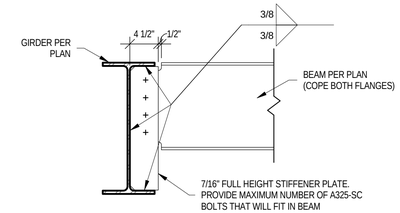

NOTE: DESIGNATION ON PLAN

BEAM-TO-GIRDER FULL HEIGHT PLATE CONNECTION 3

N.T.S.

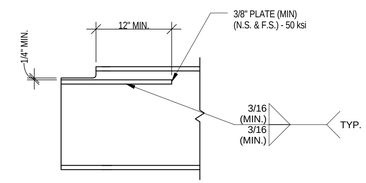

NOTE:
COPED BEAMS SHALL BE INVESTIGATED AND CONNECTIONS DESIGNED IN ACCORDANCE WITH METHODS PRESENTED IN THE "A.I.S.C. STEEL CONSTRUCTION MANUAL" LATEST ED. WHERE REQUIRED BY ANALYSIS, PROVIDE REINFORCING AS SHOWN.

TYPICAL COPED BEAM DETAIL 4

N.T.S.

NOTES

1. THE FACTORED LOADS TO BE RESISTED BE THE INDIVIDUAL MEMBERS AND THEIR CONNECTIONS ARE SHOWN IN THE STUCTURAL DESIGN DRAWINGS.
2. STEEL CONNECTION DETAILS SHOW GENERAL CRITERIA FOR DESIGN AND DETAILING, AND ARE NOT INTENDED TO SHOW COMPLETE CONNECTION CONFIGURATIONS OR OTHER SPECIFIC INFORMATION THAT ARE THE RESPONSIBILITY OF THE CONNECTION DESIGN ENGINEER. ALTERNATE CONNECTION CONFIGURATIONS MAY BE SUBMITTED TO THE ARCHITECT FOR REVIEW AND APPROVAL.
3. TYPICAL STEEL CONNECTIONS USE 7/8"Ø A325-N BOLTS PER AISC STANDARDS, UNLESS NOTED OTHERWISE.
4. BOLTS TO BE TIGHTENED TO AISC SNUG-TIGHT CONDITION UNLESS NOTED OTHERWISE. PRETENSIONED BOLTS ARE REQUIRED IN LOCATIONS SPECIFIED BY AISC 360-10, SECTION J1.10.
5. CONNECTIONS TO HAVE AISC STANDARD ROUND HOLES UNLESS NOTED OTHERWISE.
6. ALL CONNECTION PLATE MATERIALS TO BE A36 UNLESS NOTED OTHERWISE.

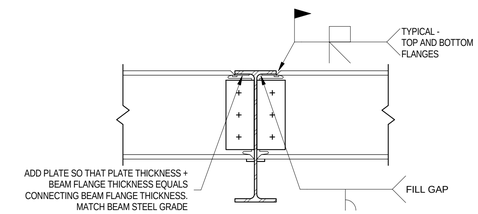

NOTE: BEAM FLANGE WELDS MAY BE CHANGED TO PARTIAL-PENETRATION GROOVE WELDS OR FILLET WELDS, IF ADEQUATE FOR THE LOADS.

MOMENT CONNECTION - BEAM TO BEAM 5

N.T.S.

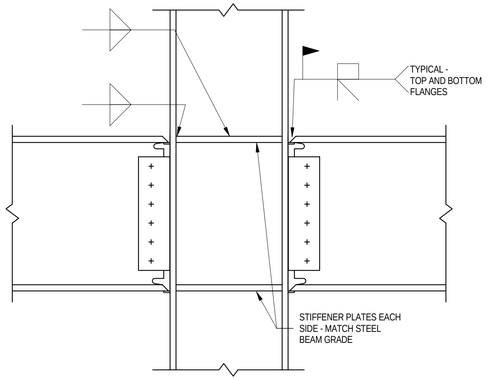

NOTE: BEAM FLANGE WELDS MAY BE CHANGED TO PARTIAL-PENETRATION GROOVE WELDS OR FILLET WELDS, AND STIFFENER PLATES MAY BE ELIMINATED, IF ADEQUATE FOR THE LOADS.

MOMENT CONNECTION BEAM TO COLUMN FLANGE 6

N.T.S.

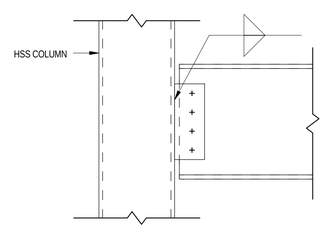

NOTE: FOR FURTHER INFORMATION, REFER TO TYPICAL SINGLE PLATE SHEAR CONNECTION

SINGLE-PLATE CONNECTION TO HSS 7

N.T.S.

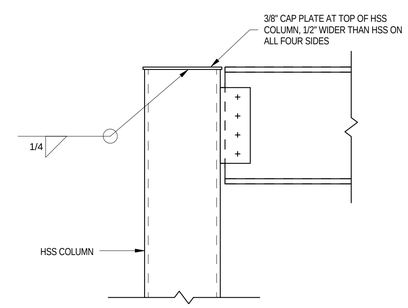

CAP PLATE AT HSS COLUMN 8

N.T.S.

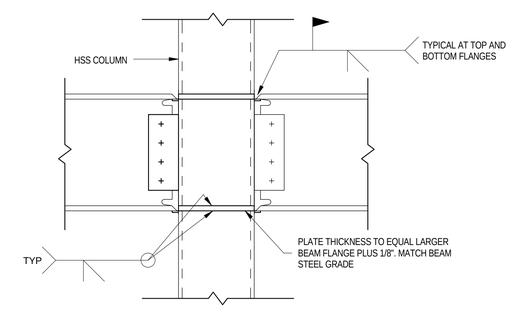

NOTE: BEAM FLANGE WELDS MAY BE CHANGED TO PARTIAL-PENETRATION GROOVE WELDS OR FILLET WELDS, AND STIFFENER PLATES MAY BE EMILINATED, IF ADEQUATE FOR THE LOADS

MOMENT CONNECTION - BEAM TO HSS COLUMN 9

N.T.S.

NOT FOR CONSTRUCTION

REV.	DATE	DESCRIPTION
5	03/02/15	ISSUED FOR 90% REVIEW
4	02/23/15	ISSUED FOR 90% COST ESTIMATE
3	01/26/15	ISSUED FOR 60% REVIEW

REVISIONS

HOLABIRD & ROOT
140 South Dearborn Chicago, IL 60603
Tel: 312 357 1771 Fax: 312 357 1909
www.holabird.com

	FERMI LAB	DATE
DESIGNED		
DRAWN	N.PALL	03/02/2015
CHECKED		
APPROVED		
SUBMITTED		

SCALE:

FERMI NATIONAL ACCELERATOR LABORATORY

UNITED STATES DEPARTMENT OF ENERGY

SBN FAR DETECTOR BUILDING

TYPICAL STEEL DETAILS

DRAWING NO. 6-7-93 S-14 REV. 5

02 MAR. 2015

C:\Users\Matt_B\Desktop\Revit Locals\15592_SBN_Far_Detector_blewittm.rvt

3/2/2015 6:49:05 PM

BEAM SIZE	NUMBER OF BOLTS	PLATE SIZE	NO. OF HORIZ. ROWS OF STUDS	FACTURED CAPACITY
W8, W10	2	1/2" x 10" x 1'-0"	2	36 k
W12, W14	3	1/2" x 10" x 1'-0"	2	36 k
W16, W18	4	1/2" x 10" x 1'-6"	3	56 k
W21	5	3/4" x 10" x 1'-10"	4	67 k
W24	6	3/4" x 10" x 1'-10"	5	69 k
W27	7	3/4" x 10" x 2'-4"	6	83 k
W30	8	3/4" x 10" x 2'-7"	7	90 k
W33, W36	9	3/4" x 10" x 2'-10"	8	96 k

NOTE: CONNECTION CAPACITY IS BASED ON STUDS AND MINIMUM CONCRETE STRENGTH fc = 3,000 psi.

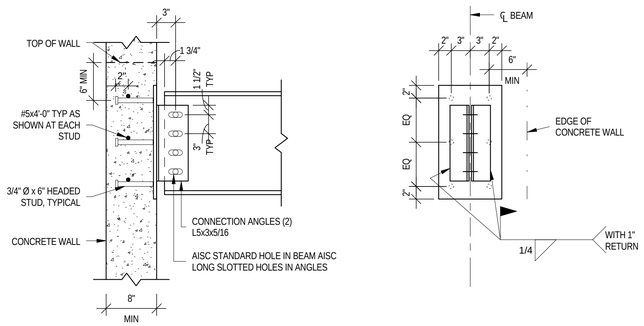

EMBEDDED PLATE CONNECTION 1

N.T.S.

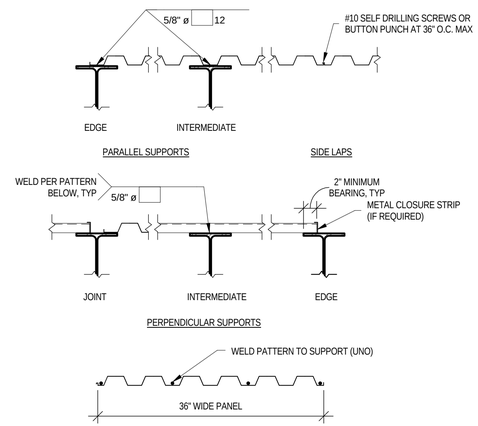

ROOF DECK FASTENING 3

N.T.S.

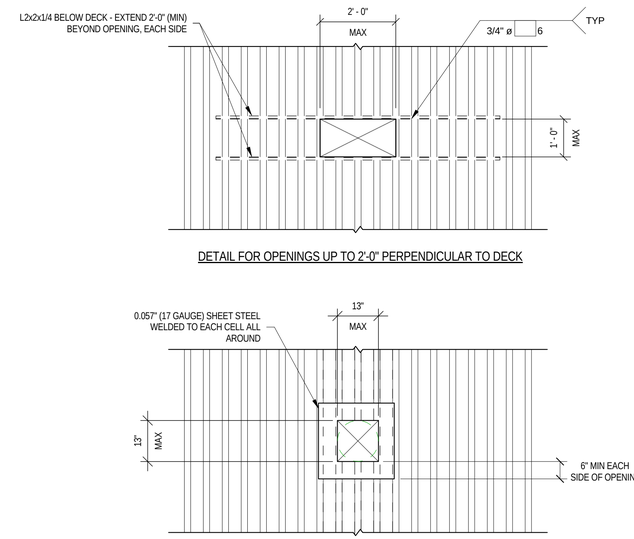

DECK SUPPORT AT SMALL ROOF OPENINGS 2

N.T.S.

NOT FOR CONSTRUCTION

C:\Users\Matt_B\Desktop\Revit Locals\15592_SBN_Far_Detector_blewittm.rvt

3/2/2015 6:49:05 PM

REV.	DATE	DESCRIPTION
5	03/02/15	ISSUED FOR 90% REVIEW

REVISIONS

HOLABIRD & ROOT

140 South Dearborn Chicago, IL 60603
Tel: 312 357 1771 Fax: 312 357 1909

www.holabird.com

	FERMI LAB	DATE
DESIGNED		
DRAWN	N.PALL	03/02/2015
CHECKED		
APPROVED		
SUBMITTED		

SCALE:

FERMI NATIONAL ACCELERATOR LABORATORY

UNITED STATES DEPARTMENT OF ENERGY

SBN FAR DETECTOR BUILDING

TYPICAL STEEL DETAILS

DRAWING NO. 6-7-93 S-15 REV. 5

02 MAR. 2015

ROOF							ROOF
778' - 6" LOW BAY ROOF				W12X65 SPLICE		W12X65 SPLICE	778' - 6" LOW BAY ROOF
768' - 0" ENTRY ROOF							768' - 0" ENTRY ROOF
761' - 0" MAIN LEVEL	HSS8X8X5/16	W8X31	W12X45	W24X162	W12X65	W24X162	761' - 0" MAIN LEVEL
749' - 0"							749' - 0"
Column Locations	A-3.7, A-4, A-4.6, A-5, A-5.8	B-1, B-2.5, B-3, B-3.5, B-5, B-6.8, C-1, C-5-1, D-1, D.5-1., E-1, F-1, F-2.5, F-3, F-3.5, F-4.5, F-5, F-5.5, F-6.4, F-6.8	B-2, B-4, B-6, F-2, F-4, F-6	C-2, C-3, C-4, C-5, C-6, C-6.8, C-7	D-7	E-2, E-3, E-4, E-5, E-6, E-6.8, E-7	

STEEL COLUMN SCHEDULE

SCALE: 1/8" = 1'-0"

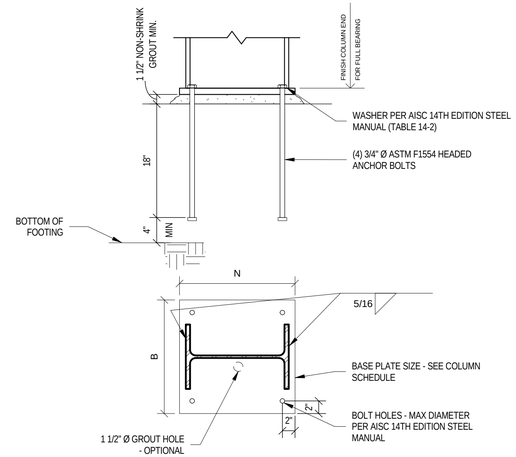

BASE PLATE TYPE BP-1

N.T.S.

1

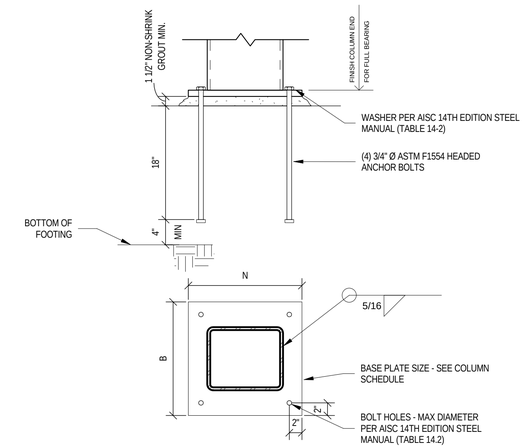

BASE PLATE TYPE BP-2

N.T.S.

2

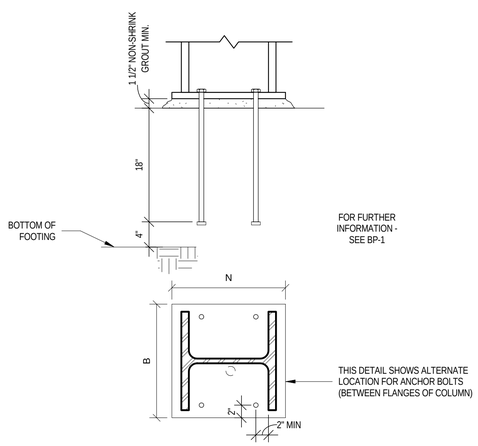

BASE PLATE TYPE BP-3

N.T.S.

3

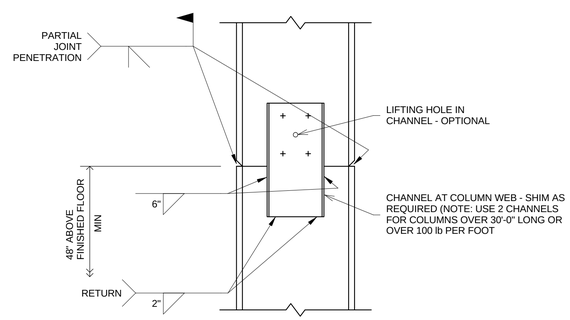

NOTE:
REFER TO AISC MANUAL OF STEEL CONSTRUCTION, 14TH EDITION, FOR FURTHER INFORMATION (TABLE 14-3, CASE YIIIB)

GRAVITY COLUMN SPLICE

N.T.S.

4

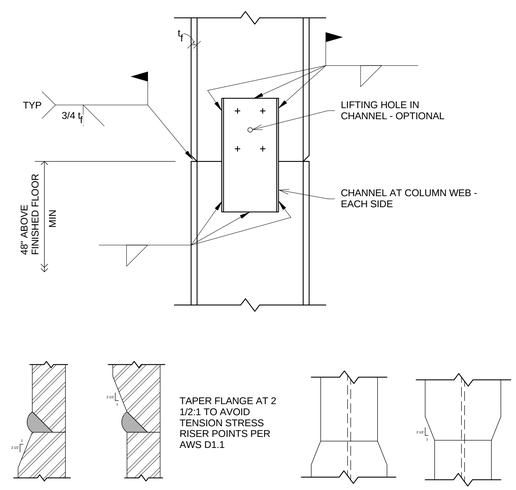

TENSION COLUMN SPLICE

N.T.S.

5

NOT FOR CONSTRUCTION

REV.	DATE	DESCRIPTION
5	03/02/15	ISSUED FOR 90% REVIEW
4	02/23/15	ISSUED FOR 90% COST ESTIMATE
3	01/26/15	ISSUED FOR 60% REVIEW

REVISIONS

HOLABIRD & ROOT
140 South Dearborn Chicago, IL 60603
Tel: 312 357 1771 Fax: 312 357 1909
www.holabird.com

FERMI LAB		DATE
DESIGNED		
DRAWN	N.PALL	03/02/2015
CHECKED		
APPROVED		
SUBMITTED		

SCALE:
1/8"=1'-0"
8 0 8 16
SCALE FEET

FERMI NATIONAL ACCELERATOR LABORATORY
UNITED STATES DEPARTMENT OF ENERGY

SBN FAR DETECTOR BUILDING
STEEL COLUMN SCHEDULE & DETAILS

DRAWING NO. 6-7-93 S-16 REV. 5

02 MAR. 2015

C:\Users\Matt_B\Desktop\Revit Locals\15592_SBN_Far_Detector_blewittm.rvt

3/2/2015 6:49:06 PM

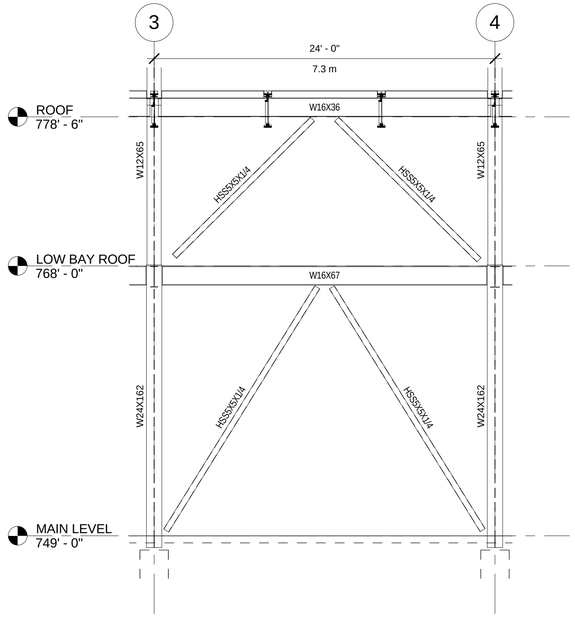

BRACING ELEVATION - LINE C

SCALE: 3/16" = 1'-0"

1

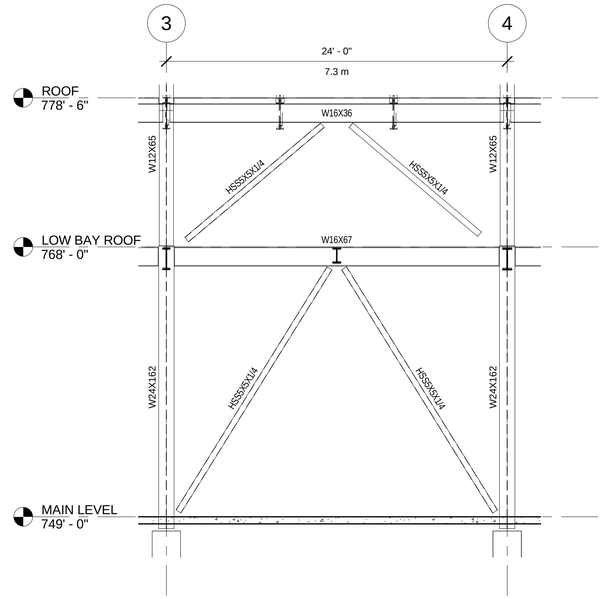

BRACING ELEVATION - LINE E

SCALE: 3/16" = 1'-0"

2

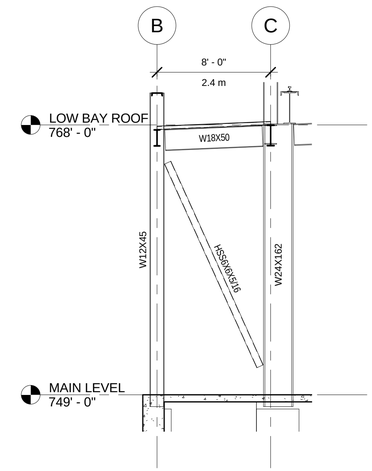

BRACING ELEVATION - LINE 2

SCALE: 3/16" = 1'-0"

3

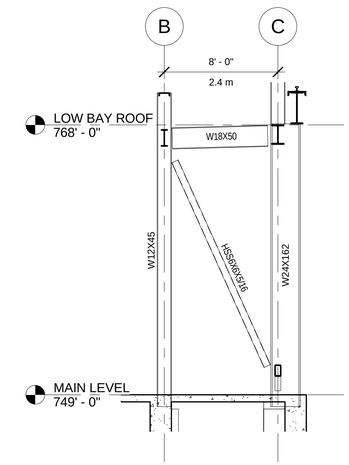

BRACING ELEVATION - LINE 4

SCALE: 3/16" = 1'-0"

4

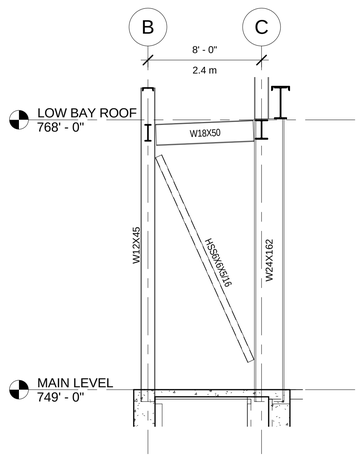

BRACING ELEVATION - LINE 6

SCALE: 3/16" = 1'-0"

5

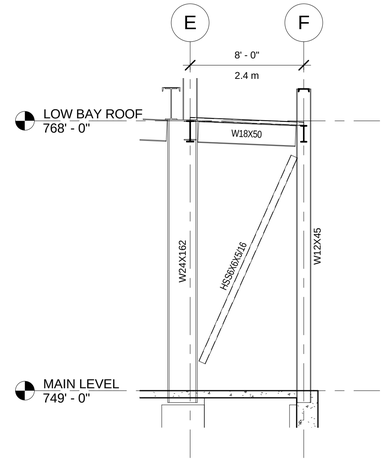

BRACING ELEVATION - LINE 2

SCALE: 3/16" = 1'-0"

6

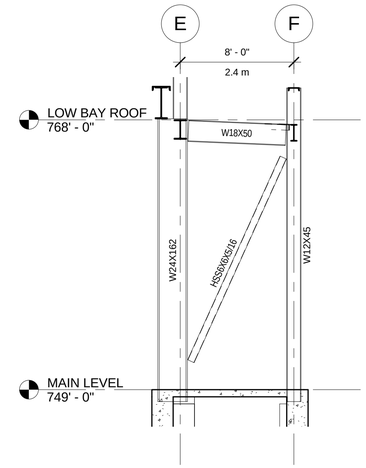

BRACING ELEVATION - LINE 4

SCALE: 3/16" = 1'-0"

7

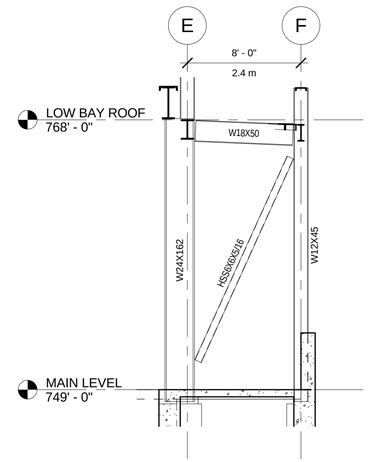

BRACING ELEVATION - LINE 6

SCALE: 3/16" = 1'-0"

8

NOT FOR CONSTRUCTION

REV.	DATE	DESCRIPTION
5	03/02/15	ISSUED FOR 90% REVIEW
4	02/23/15	ISSUED FOR 90% COST ESTIMATE
3	01/26/15	ISSUED FOR 60% REVIEW

REVISIONS

HOLABIRD & ROOT

140 South Dearborn Chicago, IL 60603
Tel: 312 357 1771 Fax: 312 357 1909

www.holabird.com

	FERMI LAB	DATE
DESIGNED		
DRAWN	N.PALL	03/02/2015
CHECKED		
APPROVED		
SUBMITTED		

SCALE:

3/16"=1'-0"

2 0 2 4 6 8 10 12 14
SCALE FEET

FERMI NATIONAL ACCELERATOR LABORATORY

UNITED STATES DEPARTMENT OF ENERGY

SBN FAR DETECTOR BUILDING

BRACING ELEVATIONS

DRAWING NO. **6-7-93** **S-17** REV. **5**

02 MAR. 2015

C:\Users\Matt_B\Desktop\Revit Locals\15592_SBN_Far_Detector_blewittm.rvt

3/2/2015 6:49:09 PM

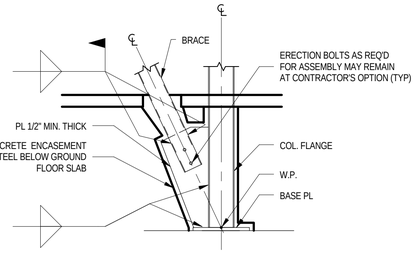

TUBULAR BRACE TO COLUMN FLANGE AT FOOTING

1

N.T.S.

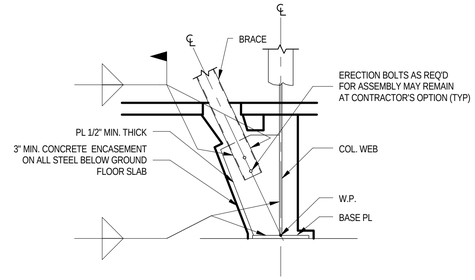

TUBULAR BRACE TO COLUMN WEB AT FOOTING

2

N.T.S.

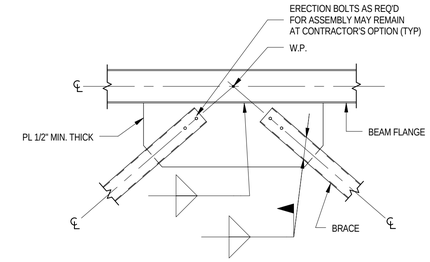

TUBULAR BRACE TO HORIZONTAL BEAM FLANGE

3

N.T.S.

BRACING CONNECTION NOTES:

1. WORK POINT (W.P.) FOR CONNECTION DESIGN ARE AS SHOWN ON THE BRACING DETAILS. WORKPOINTS ARE NOT TO BE CHANGED WITHOUT APPROVAL OF THE STRUCTURAL ENGINEER.
2. BRACING CONNECTIONS SHALL BE DESIGNED IN ACCORDANCE WITH THE "UNIFORM FORCE METHOD" - SPECIAL CASE #2 IN THE AISC MANUAL OF STEEL CONSTRUCTION, 13th EDITION,USING ALLOWABLE STRESS DESIGN (ASD) SPECIFICATIONS.
3. A ONE-THIRD INCREASE IN ALLOWABLE STRESS IS NOT PERMITTED IN THE DESIGN OF CONNECTIONS.
4. ALL CONNECTIONS FOR BRACING MEMBERS (BEAMS & DIAGONAL BRACES) SHALL BE WELDED OR SLIP-CRITICAL BOLTED CONNECTIONS.
5. IF CONNECTIONS ARE WELDED, ERECTION BOLTS AS REQ'D FOR ASSEMBLY MAY REMAIN AT CONTRACTOR'S OPTION.
6. BEAM VERTICAL FORCE SHALL BE AS SHOWN IN THE CONNECTION CAPACITY TABLE ON SHEET S3-2, UNLESS OTHERWISE SHOWN ON PLANS OR BRACING ELEVATIONS.
7. BEAM HORIZONTAL FORCE PARALLEL TO BEAM FOR BEAM-TO-COLUMN CONNECTION ARE SHOWN ON BRACING ELEVATIONS AS (H= ... k).
8. BRACE FORCES FOR CONNECTION DESIGN ARE SHOWN ON BRACING ELEVATIONS. BRACE FORCES MAY BE COMPRESSION OR TENSION AND SHALL BE COMBINED WITH BEAM FORCES TO RESULT IN MAXIMUM FORCE FOR CONNECTION DESIGN.
9. BEAM/BRACE CONNECTIONS TO COLUMNS ARE TO DEVELOP THE BRACE HORIZONTAL AND VERTICAL FORCE COMPONENTS.
10. STITCH BOLTS SHALL BE PROVIDED FOR DIAGONAL BRACES OF DOUBLE-ANGLE SECTION AS REQ'D BY AISC's "MANUAL OF STEEL CONSTRUCTION". MINIMUM 2 BOLTS PER LOCATION. MINIMUM 2 LOCATIONS PER BRACE.
11. UNLESS OTHERWISE NOTED, ALL GUSSET PLATE THICKNESSES AND WELD SIZES ARE MINIMUMS. FINAL SIZES ARE AT THE DIRECTION OF THE CONTRACTOR'S CONNECTION DESIGN ENGINEER.

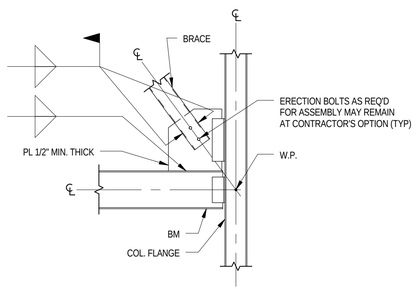

TOP TUBULAR BRACE TO COLUMN FLANGE

4

N.T.S.

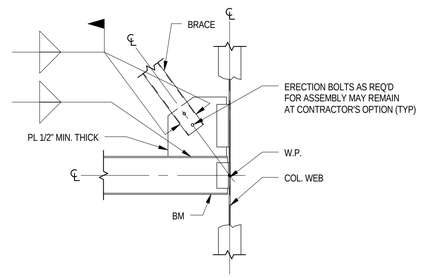

TOP TUBULAR BRACE TO COLUMN WEB

5

N.T.S.

NOT FOR CONSTRUCTION

REV.	DATE	DESCRIPTION
5	03/02/15	ISSUED FOR 90% REVIEW
4	02/23/15	ISSUED FOR 90% COST ESTIMATE
3	01/26/15	ISSUED FOR 60% REVIEW

REVISIONS

HOLABIRD & ROOT
140 South Dearborn Chicago, IL 60603
Tel: 312 357 1771 Fax: 312 357 1909
www.holabird.com

	FERMI LAB	DATE
DESIGNED		
DRAWN	N.PALL	03/02/2015
CHECKED		
APPROVED		
SUBMITTED		

SCALE:

FERMI NATIONAL ACCELERATOR LABORATORY
UNITED STATES DEPARTMENT OF ENERGY

SBN FAR DETECTOR BUILDING
BRACING DETAILS

DRAWING NO. 6-7-93 S-18 REV. 5

02 MAR. 2015

C:\Users\Matt_B\Desktop\Revit Locals\15592_SBN_Far_Detector_blewittm.rvt

3/2/2015 6:49:10 PM

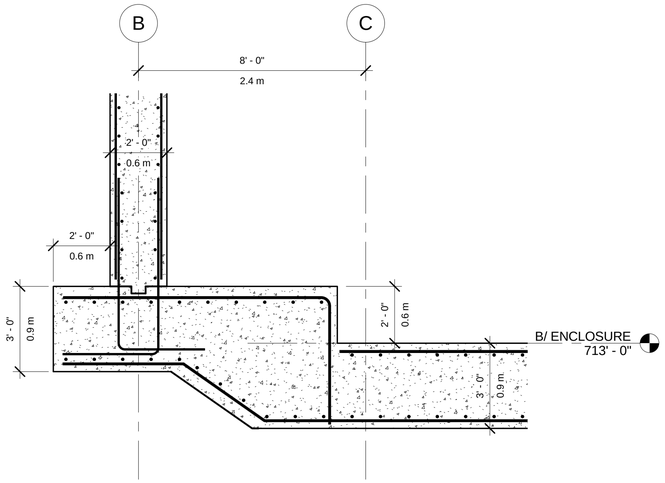

SECTION AT FOUNDATION STEP

SCALE: 3/8" = 1'-0"

1

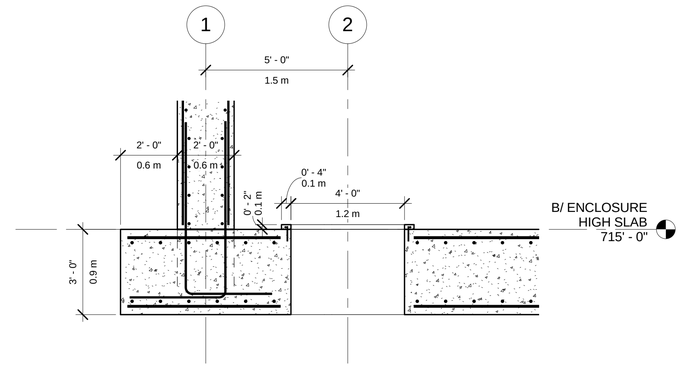

SECTION AT SUMP PIT CURB

SCALE: 3/8" = 1'-0" [REF: 2/ S-3]

2

NOT FOR CONSTRUCTION

C:\Users\Matt_B\Desktop\Revit Locals\15592_SBN_Far_Detector_blewittm.rvt

3/2/2015 6:49:11 PM

REV.	DATE	DESCRIPTION
5	03/02/15	ISSUED FOR 90% REVIEW
4	02/23/15	ISSUED FOR 90% COST ESTIMATE
3	01/26/15	ISSUED FOR 60% REVIEW

REVISIONS

HOLABIRD & ROOT
140 South Dearborn Chicago, IL 60603
Tel: 312 357 1771 Fax: 312 357 1909
www.holabird.com

	FERMI LAB	DATE
DESIGNED		
DRAWN	N.PALL	03/02/2015
CHECKED		
APPROVED		
SUBMITTED		

SCALE:
3/8"=1'-0"
1 0 1 2 3 4 5 6 7
SCALE FEET

FERMI NATIONAL ACCELERATOR LABORATORY
UNITED STATES DEPARTMENT OF ENERGY

SBN FAR DETECTOR BUILDING
FOUNDATION DETAILS

DRAWING NO. 6-7-93 S-19 REV. 5

02 MAR. 2015

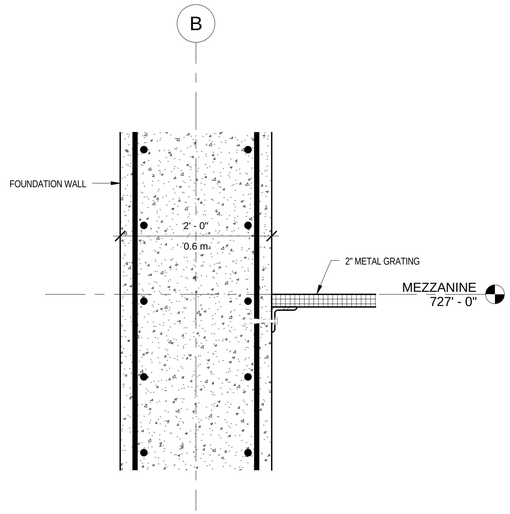

SECTION AT MEZZANINE GRATING SUPPORT AT FOUNDATION WALL

1

SCALE: 1" = 1'-0"

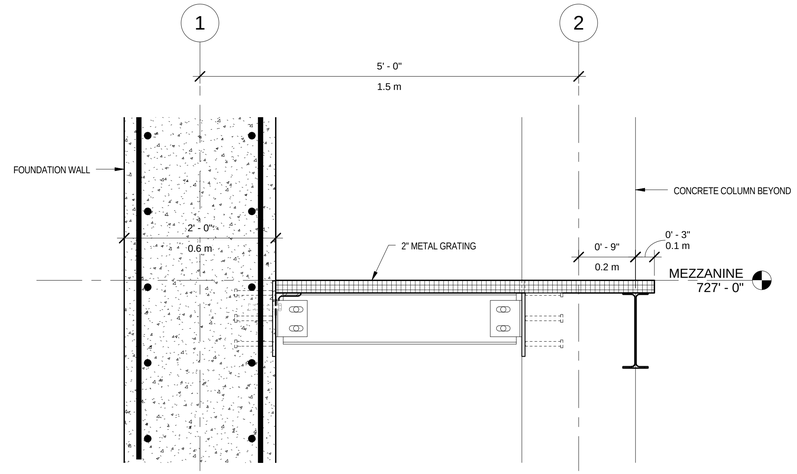

SECTION AT SOUTH END MEZZANINE FRAMING

2

SCALE: 1" = 1'-0"

NOT FOR CONSTRUCTION

REV.	DATE	DESCRIPTION
5	03/02/15	ISSUED FOR 90% REVIEW
4	02/23/15	ISSUED FOR 90% COST ESTIMATE
3	01/26/15	ISSUED FOR 60% REVIEW

REVISIONS

HOLABIRD & ROOT
140 South Dearborn Chicago, IL 60603
Tel: 312 357 1771 Fax: 312 357 1909
www.holabird.com

	FERMI LAB	DATE
DESIGNED		
DRAWN	N.PALL	03/02/2015
CHECKED		
APPROVED		
SUBMITTED		

SCALE: 1"=1'-0" 1 0 1 2 SCALE FEET

FERMI NATIONAL ACCELERATOR LABORATORY
UNITED STATES DEPARTMENT OF ENERGY

SBN FAR DETECTOR BUILDING
MEZZANINE FRAMING DETAILS

DRAWING NO. 6-7-93 S-20 REV. 5

02 MAR. 2015

C:\Users\Matt_Bl\Desktop\Revit Locals\15592_SBN_Far_Detector_blewittm.rvt

3/2/2015 6:49:12 PM

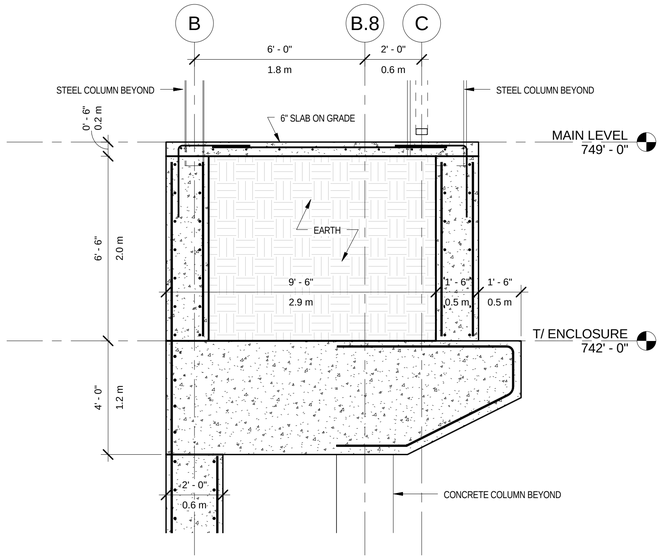

SECTION AT SHIELDING SUPPORT LEDGE

1

SCALE: 3/8" = 1'-0" [REF: 1/ S-5]

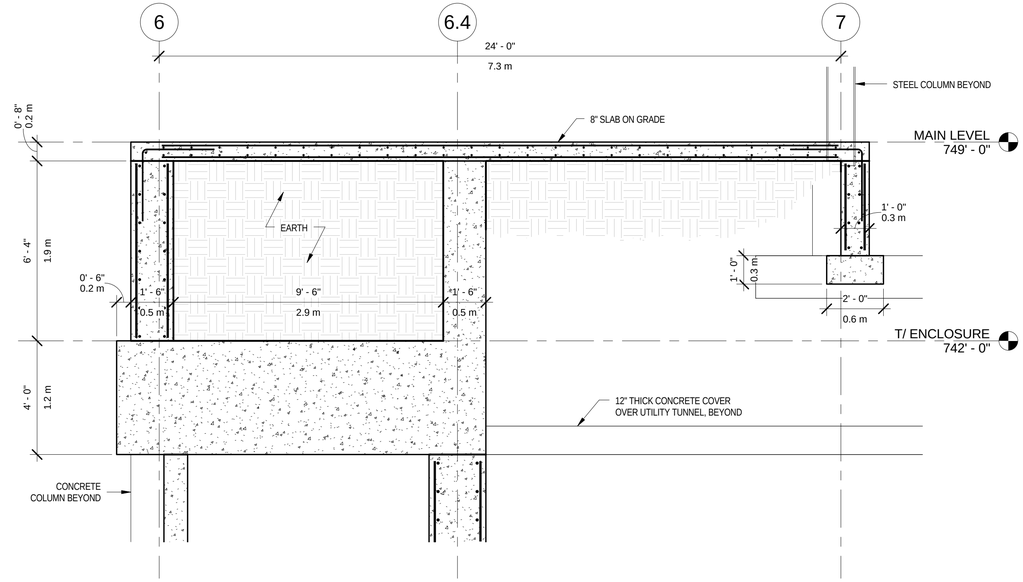

SECTION AT LOADING DOCK SHIELDING LEDGE

2

SCALE: 3/8" = 1'-0" [REF: 1/ S-5]

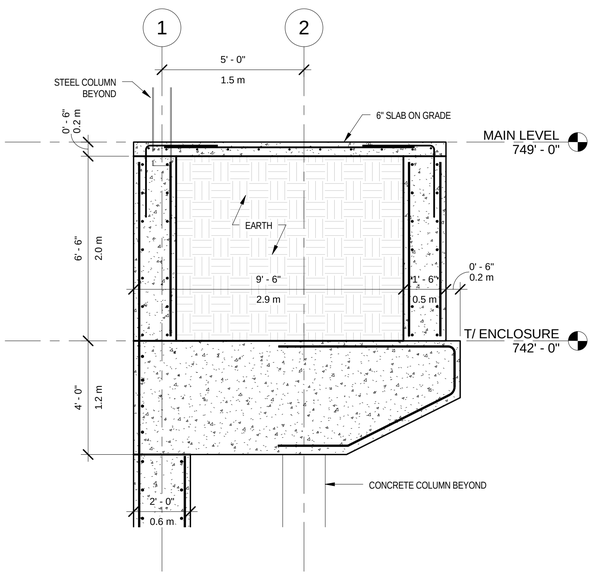

SECTION AT SOUTH SHIELDING LEDGE

3

SCALE: 3/8" = 1'-0" [REF: 1/ S-5]

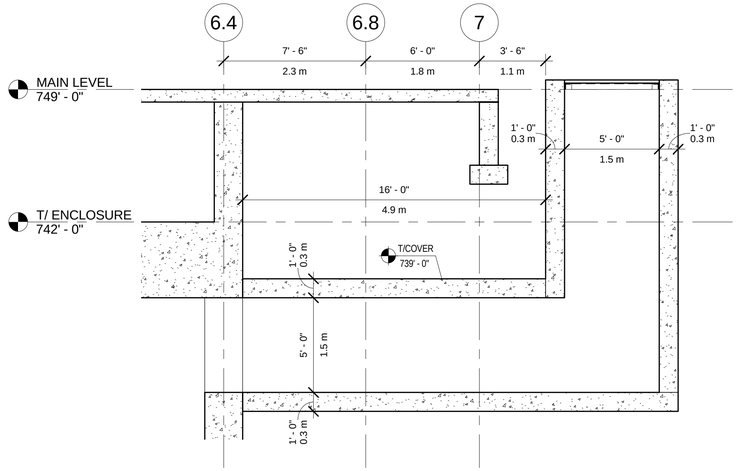

SECTION AT UTILITY SHAFT/TUNNEL

4

SCALE: 1/4" = 1'-0" [REF: 1/ S-5]

NOT FOR CONSTRUCTION

REV.	DATE	DESCRIPTION
5	03/02/15	ISSUED FOR 90% REVIEW
4	02/23/15	ISSUED FOR 90% COST ESTIMATE
3	01/26/15	ISSUED FOR 60% REVIEW

REVISIONS

HOLABIRD & ROOT
140 South Dearborn Chicago, IL 60603
Tel: 312 357 1771 Fax: 312 357 1909
www.holabird.com

	FERMI LAB	DATE
DESIGNED		
DRAWN	N.PALL	03/02/2015
CHECKED		
APPROVED		
SUBMITTED		

SCALE:

3/8"=1'-0" 1 0 1 2 3 4 5 6 7 SCALE FEET

1/4"=1'-0" 4 0 4 8 SCALE FEET

FERMI NATIONAL ACCELERATOR LABORATORY

UNITED STATES DEPARTMENT OF ENERGY

SBN FAR DETECTOR BUILDING

SHIELDING FRAMING DETAILS

DRAWING NO. 6-7-93 S-21 REV. 5

02 MAR. 2015

C:\Users\Matt_Bl\Desktop\Revit Locals\155592_SBN_Far_Detector_blewittm.rvt

3/2/2015 6:49:14 PM

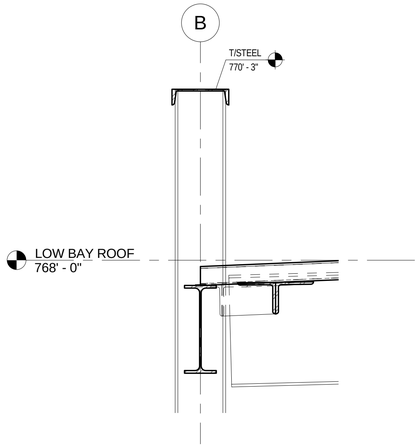

SECTION AT LOW BAY ROOF PARAPET SUPPORT

1

SCALE: 1" = 1'-0"

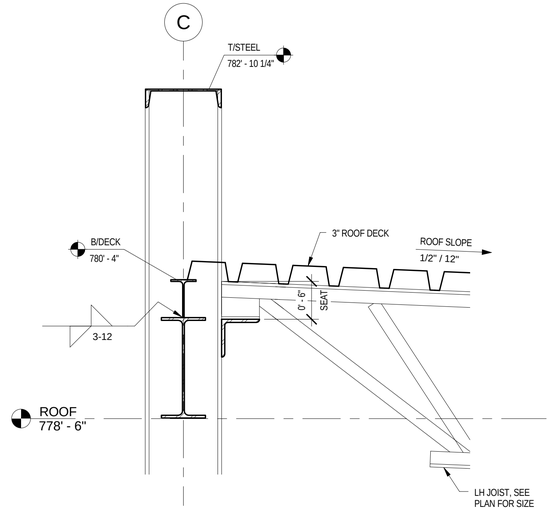

DETAIL AT JOIST SEAT - HIGH END AT COLUMN

4

SCALE: 1" = 1'-0"

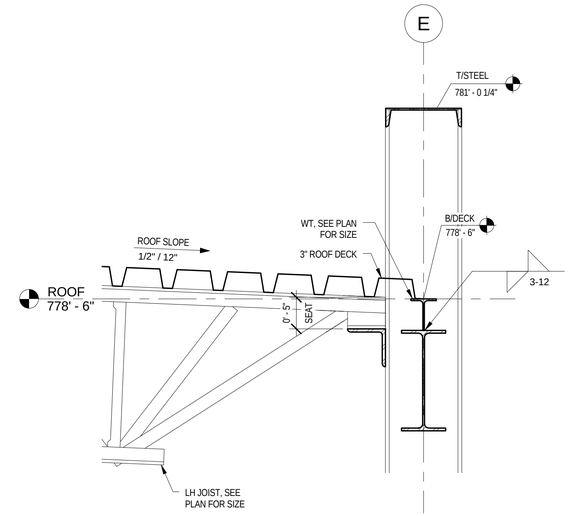

DETAIL AT JOIST SEAT - LOW END AT COLUMN

5

SCALE: 1" = 1'-0"

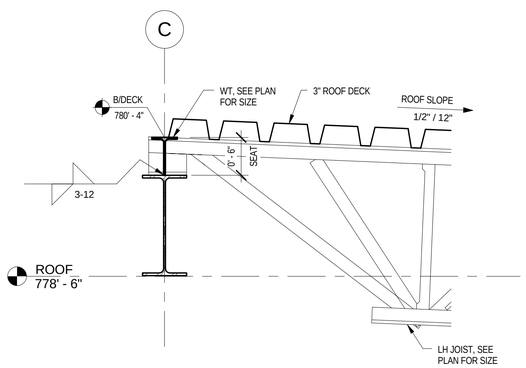

DETAIL AT JOIST SEAT - HIGH END

2

SCALE: 1" = 1'-0"

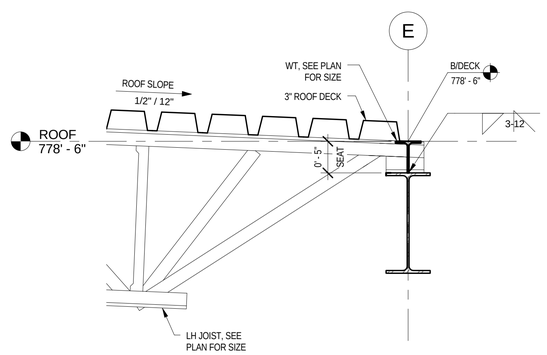

DETAIL AT JOIST SEAT - LOW END

3

SCALE: 1" = 1'-0"

NOT FOR CONSTRUCTION

REV.	DATE	DESCRIPTION
5	03/02/15	ISSUED FOR 90% REVIEW

REVISIONS

HOLABIRD & ROOT

140 South Dearborn Chicago, IL 60603
Tel: 312 357 1771 Fax: 312 357 1909

www.holabird.com

	FERMI LAB	DATE
DESIGNED		
DRAWN	N.PALL	03/02/2015
CHECKED		
APPROVED		
SUBMITTED		

SCALE:

1"=1'-0" 1 0 1 2 SCALE FEET

FERMI NATIONAL ACCELERATOR LABORATORY

UNITED STATES DEPARTMENT OF ENERGY

SBN FAR DETECTOR BUILDING

ROOF FRAMING DETAILS

DRAWING NO. 6-7-93 S-22 REV. 5

02 MAR. 2015

C:\Users\Matt_B\Desktop\Revit Locals\15592_SBN_Far_Detector_blewittm.rvt

3/2/2015 6:49:17 PM

CONTACT PERSONS

DESCRIPTION:	PERSON:
PROJECT MANAGER	JEFF OKE
MECHANICAL ENGINEER	PAUL MUELLER

GENERAL MECHANICAL NOTES:

1. DRAWINGS SHOWING LOCATIONS OF EQUIPMENT, DUCTWORK, PIPING, ETC. ARE DIAGRAMMATIC AND MAY NOT ALWAYS REFLECT ACTUAL INSTALLATION CONDITIONS. DRAWINGS SHOW THE GENERAL ARRANGEMENT OF ALL DUCTWORK, PIPING, EQUIPMENT, ETC., AND MAY NOT INCLUDE ALL OFFSETS AND FITTINGS REQUIRED FOR COMPLETE INSTALLATION. THE DRAWINGS SHALL BE FOLLOWED AS CLOSELY AS ACTUAL BUILDING CONSTRUCTION AND THE WORK OF OTHERS WILL PERMIT.
2. DO NOT SCALE DRAWINGS. VERIFY ALL DIMENSIONS AND CLEARANCES FROM ARCHITECTURAL, STRUCTURAL, SUBMITTALS, AND OTHER APPROPRIATE DRAWINGS OR PHYSICALLY AT SITE. READ ALL SPECIFICATIONS. REVIEW ALL DRAWINGS, INCLUDING THOSE OF OTHER TRADES.
3. LAYOUT AND COORDINATE ALL WORK WITH ALL OTHER TRADES PRIOR TO INSTALLATION TO PROVIDE CLEARANCES REQUIRED FOR OPERATION, MAINTENANCE, CODE COMPLIANCE, AND TO VERIFY NON-INTERFERENCE WITH OTHER WORK. DO NOT FABRICATE PRIOR TO VERIFICATION OF NECESSARY CLEARANCES FOR ALL TRADES. BRING ANY INTERFERENCES OR CONFLICTS TO THE ATTENTION OF FERMILAB BEFORE PROCEEDING WITH ANY FABRICATION OR EQUIPMENT ORDERS.
4. SUBCONTRACTOR IS RESPONSIBLE FOR REVIEW OF SPACE REQUIREMENTS OF EQUIPMENT SPECIFIED OR SUBSTITUTED AND MAKING REASONABLE ACCOMMODATIONS IN LAYOUT AND POSITIONING TO PROVIDE PROPER ACCESS.
5. ANY CHANGES THAT ARE REQUIRED TO ELIMINATE CONFLICTS AND RESULT FROM A FAILURE TO COORDINATE SHALL BE MADE BY THE SUBCONTRACTOR WITHOUT ADDITIONAL COST OR EXPENSE TO THE FERMILAB.
6. CAULK ALL PIPE AND DUCT PENETRATIONS OF FULL HEIGHT NON FIRE RATED WALLS, PARTITIONS, FLOORS AND ROOF ASSEMBLIES. THIS IS ESSENTIAL TO PREVENT NOISE TRANSMISSION FROM ONE ROOM TO ANOTHER AND TO PROVIDE THE DESIRED NC LEVELS WITHIN THE ROOMS.
7. SUBCONTRACTOR IS RESPONSIBLE FOR ALL COST ASSOCIATED WITH ELECTRICAL CHANGES REQUIRED FOR EQUIPMENT DIFFERENT THAN THE BASIS OF DESIGN.
8. REFER TO ARCHITECTURAL REFLECTED CEILING PLAN FOR EXACT LOCATIONS OF ALL CEILING MOUNTED DEVICES.
9. ALIGN LIGHT SWITCHES AND TEMPERATURE SENSORS WHEN IN CLOSE PROXIMITY TO EACH OTHER.
10. PROVIDE ACCESS DOORS AT ALL DUCT MOUNTED EQUIPMENT.

MECHANICAL SYMBOLS LIST

SYMBOL:	DESCRIPTION:
	NEW
	NEW CONNECTION
	NEW DUCT
	PIPE CAP
	PIPE DOWN
	PIPE UP OR UP/DOWN
	UNDERFLOOR PIPING (LONG DASHES)
	PITCH PIPE IN DIRECTION
	DIRECTION OF FLOW IN PIPE
	DIELECTRIC CONNECTION
	UNION/FLANGE
	SHUTOFF VALVE NORMALLY OPEN
	SHUTOFF VALVE NORMALLY CLOSED
	PRESSURE REDUCING VALVE (LIQUID/GAS)
	REDUCER - REFERENCE SPECIFICATION FOR CONCENTRIC/ECCENTRIC AND FOT/FOB
M	METER

MECHANICAL SYMBOLS LIST

SYMBOL:	DESCRIPTION:
	DIRECTION OF AIR FLOW
	FLEXIBLE DUCT
	MANUAL VOLUME DAMPER
	DUCT CAP
	DUCT DOWN
	DUCT UP
	SUPPLY/OUTSIDE AIR DUCT SECTION
	RETURN AIR DUCT SECTION
	EXHAUST/RELIEF AIR DUCT SECTION
SD-1 / 6/115	AIR TERMINAL PROPERTIES SYMBOL / NECK SIZE/CFM
	OPPOSED BLADE DAMPER (REFER TO SCHEDULE)
	PARALLEL BLADE DAMPER (REFER TO SCHEDULE)
	DIFFERENTIAL PRESSURE SENSOR
H	HUMIDISTAT SENSOR
H	HUMIDISTAT/SENSOR (DUCT MOUNTED)
T	TEMPERATURE SENSOR (DUCT MOUNTED)
T	THERMOSTAT/SENSOR
T	THERMOSTAT/SENSOR WITH HEAVY DUTY ENCLOSURE
D	DRAIN LINE
G	NATURAL GAS
T.C.C.	TEMPERATURE CONTROL SUBCONTRACTOR
C.C.	CIVIL SUBCONTRACTOR
E.C.	ELECTRICAL SUBCONTRACTOR
F.P.C.	FIRE PROTECTION SUBCONTRACTOR
G.C.	GENERAL SUBCONTRACTOR
M.C.	MECHANICAL SUBCONTRACTOR
P.C.	PLUMBING SUBCONTRACTOR
T.C.	TELECOMMUNICATIONS SUBCONTRACTOR
AD	ACCESS DOOR
AFF	ABOVE FINISHED FLOOR
EA	EXHAUST/RELIEF AIR
FD	FIRE DAMPER
MA	MIXED AIR
N.C.	NORMALLY CLOSED
N.O.	NORMALLY OPEN
OA	OUTSIDE AIR
PS	PRESSURE SWITCH
RA	RETURN AIR
SA	SUPPLY AIR

C:\Revit Local Files\MEP15_14.0872.00 - Fermi Lab - Far Detector_CENTRAL_wellsma.rvt

3/2/2015 5:19:39 PM

REV.	DATE	REVISIONS
5	03/02/15	ISSUED FOR 90% REVIEW
4	02/23/15	ISSUED FOR 90% COST ESTIMATE
3	01/26/15	ISSUED FOR 60% REVIEW
2	01/16/15	ISSUED FOR PRICING
1	12/23/14	SCHEMATIC DESIGN

KJWW ENGINEERING CONSULTANTS
The FUTURE Built SMARTER.®
1100 WARRENVILLE ROAD, SUITE 400W
NAPERVILLE, ILLINOIS 60563
630.527.2320 FAX: 630.527.2321
www.kjww.com
PROJECT #:
Illinois Design Firm Registration #184-000973

KJWW ENGINEERING RESERVES PROPRIETARY RIGHTS, INCLUDING COPYRIGHTS, TO THIS DRAWING AND THE DATA SHOWN THEREON. SAID DRAWING AND/OR DATA ARE THE EXCLUSIVE PROPERTY OF KJWW ENGINEERING AND SHALL NOT BE USED OR REPRODUCED FOR ANY OTHER PROJECT WITHOUT THE EXPRESS WRITTEN APPROVAL AND PARTICIPATION OF KJWW ENGINEERING. © 2015 KJWW, P.C.

REFERENCE SCALE IN INCHES
0 1 2 3

FERMI LAB		DATE
DESIGNED	P. MUELLER	3/2/2015
DRAWN	D. WILKINS	3/2/2015
CHECKED		
APPROVED		
SUBMITTED		

SCALE:

NOT FOR CONSTRUCTION

FERMI NATIONAL ACCELERATOR LABORATORY

UNITED STATES DEPARTMENT OF ENERGY

SBN FAR DETECTOR BUILDING

MECHANICAL COVER SHEET

DRAWING NO. 6-7-93 M-1 REV. 5

02 MAR. 2015

KEYNOTES

1. ALL MECHANICAL DUCTWORK, PIPING, EQUIPMENT, AND ACCESSORIES SHALL NOT CROSS OPENING IN GRADE LEVEL FLOOR ABOVE DETECTOR UNLESS OTHERWISE NOTED ON DRAWINGS. REFER TO ARCHITECTURAL DRAWINGS FOR MORE INFORMATION REGARDING THE FLOOR OPENING DIMENSIONS, DETECTOR CLEARANCES, AND OVERHEAD CRANE CLEARANCES.

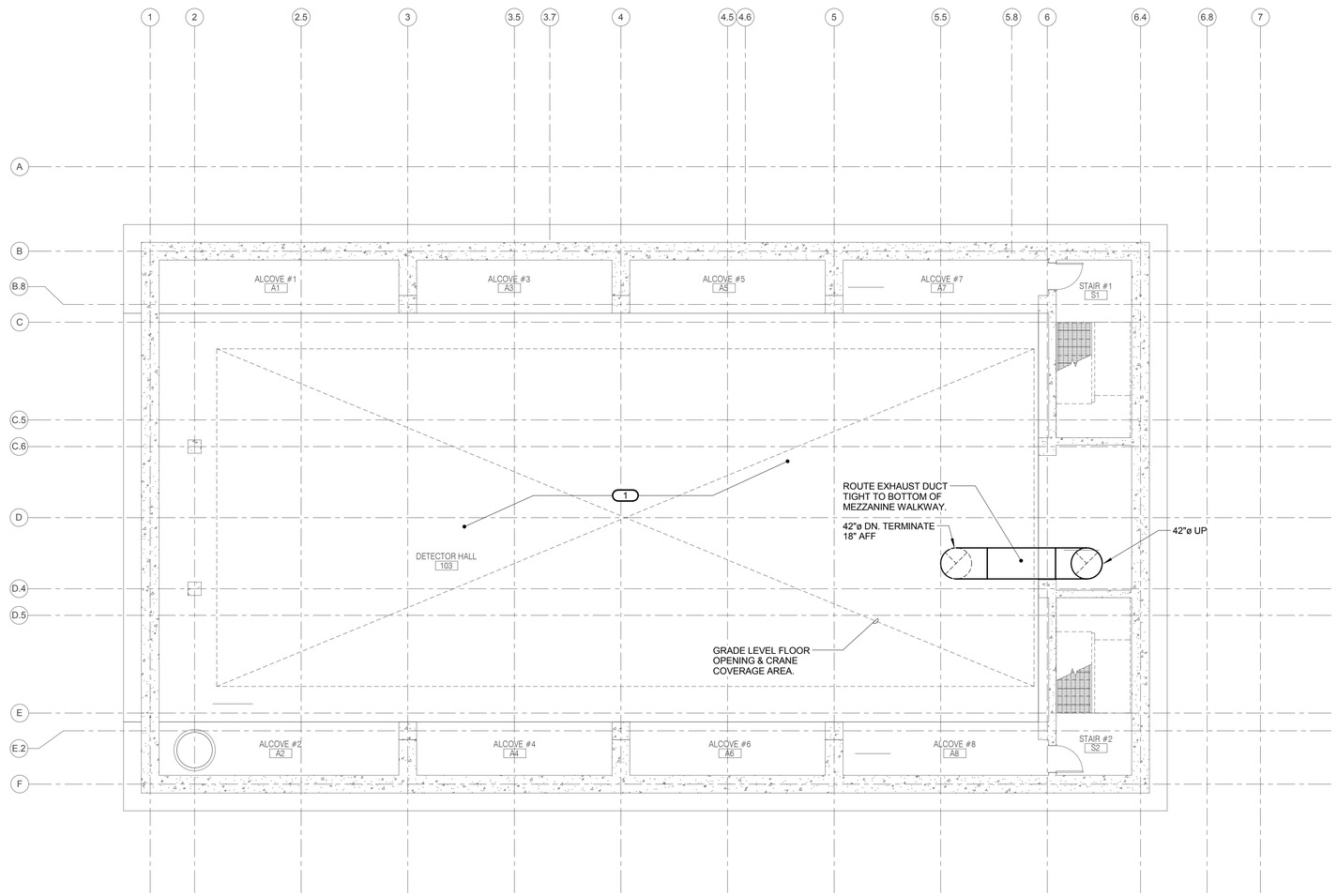

ENCLOSURE LEVEL MECHANICAL PLAN

REV.	DATE	
5	03/02/15	ISSUED FOR 90% REVIEW
4	02/23/15	ISSUED FOR 90% COST ESTIMATE
3	01/26/15	ISSUED FOR 60% REVIEW
2	01/16/15	ISSUED FOR PRICING
1	12/23/14	SCHEMATIC DESIGN

REVISIONS

KJWW ENGINEERING CONSULTANTS
The FUTURE. Built SMARTER.®
1100 WARRENVILLE ROAD, SUITE 400W
NAPERVILLE, ILLINOIS 60563
630.527.2320 FAX: 630.527.2321
www.kjww.com
PROJECT #:
Illinois Design Firm Registration #184-000973

KJWW ENGINEERING RESERVES PROPRIETARY RIGHTS, INCLUDING COPYRIGHTS, TO THIS DRAWING AND THE DATA SHOWN THEREON. SAID DRAWING AND/OR DATA ARE THE EXCLUSIVE PROPERTY OF KJWW ENGINEERING AND SHALL NOT BE USED OR REPRODUCED FOR ANY OTHER PROJECT WITHOUT THE EXPRESS WRITTEN APPROVAL AND PARTICIPATION OF KJWW ENGINEERING. © 2015 KJWW, P.C.

REFERENCE SCALE IN INCHES
0 1 2 3

	FERMI LAB	DATE
DESIGNED	P. MUELLER	3/2/2015
DRAWN	D. WILKINS	3/2/2015
CHECKED		
APPROVED		
SUBMITTED		

S W E PROJECT NORTH

SCALE:
1/8"=1'-0"
8 0 8 16
SCALE FEET

NOT FOR CONSTRUCTION

FERMI NATIONAL ACCELERATOR LABORATORY
UNITED STATES DEPARTMENT OF ENERGY

SBN FAR DETECTOR BUILDING
ENCLOSURE LEVEL MECHANICAL PLAN

DRAWING NO. 6-7-93 M-2 REV. 5

02 MAR. 2015

C:\Revit Local Files\MEP15_14.0872.00 - Fermi Lab - Far Detector_CENTRAL_wellsma.rvt

3/2/2015 5:19:40 PM

KEYNOTES (#)

1. ALL MECHANICAL DUCTWORK, PIPING, EQUIPMENT, AND ACCESSORIES SHALL NOT CROSS OPENING IN GRADE LEVEL FLOOR ABOVE DETECTOR UNLESS OTHERWISE NOTED ON DRAWINGS. REFER TO ARCHITECTURAL DRAWINGS FOR MORE INFORMATION REGARDING THE FLOOR OPENING DIMENSIONS, DETECTOR CLEARANCES, AND OVERHEAD CRANE CLEARANCES.

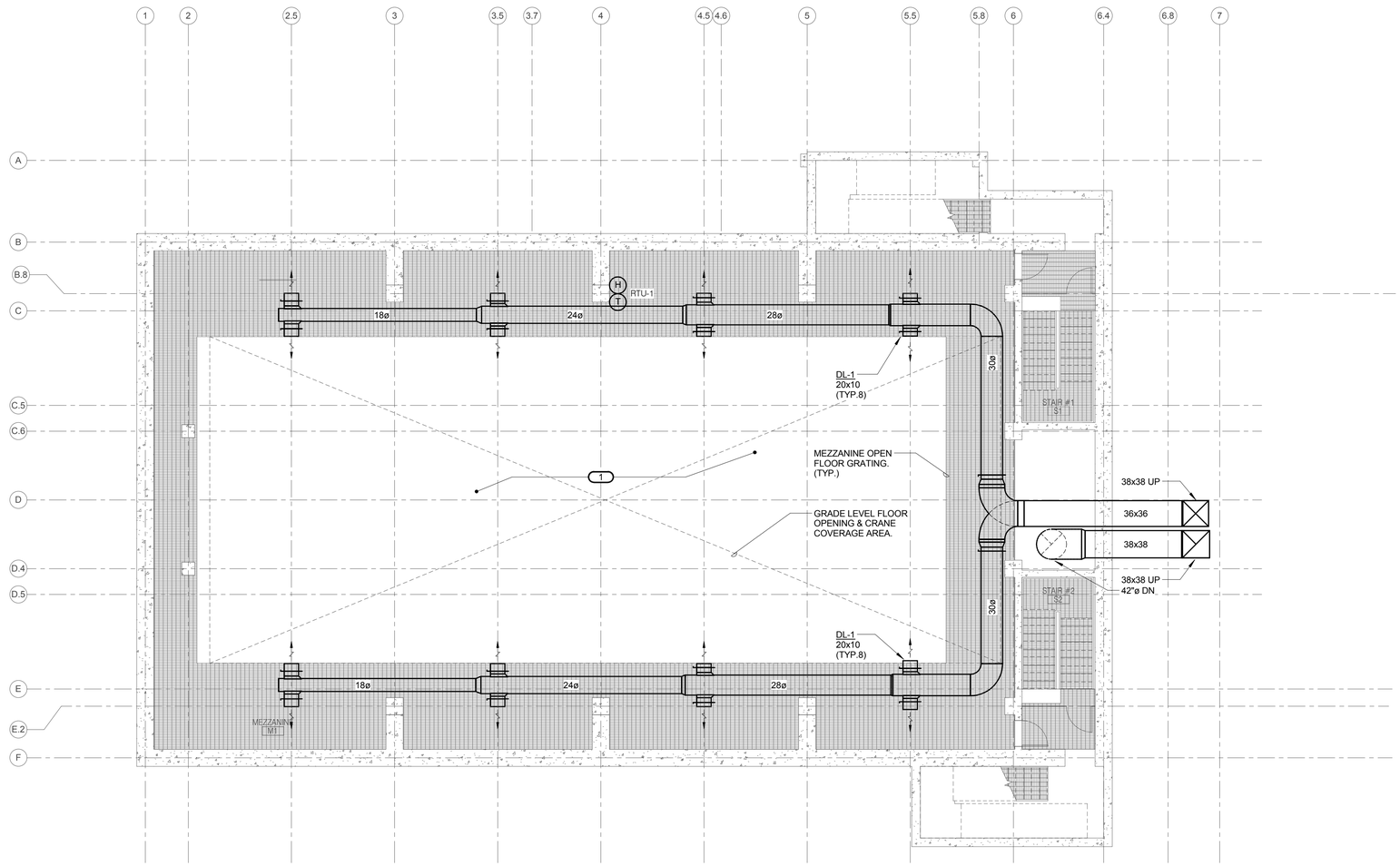

MEZZANINE LEVEL MECHANICAL PLAN

C:\Revit Local Files\MEP15_14.0872.00 - Fermi Lab - Far Detector_CENTRAL_wellsma.rvt

3/2/2015 5:19:41 PM

REV.	DATE	REVISIONS
5	03/02/15	ISSUED FOR 90% REVIEW
4	02/23/15	ISSUED FOR 90% COST ESTIMATE
3	01/26/15	ISSUED FOR 60% REVIEW
2	01/16/15	ISSUED FOR PRICING
1	12/23/14	SCHEMATIC DESIGN

KJWW ENGINEERING CONSULTANTS
The FUTURE. Built SMARTER.®
1100 WARRENVILLE ROAD, SUITE 400W
NAPERVILLE, ILLINOIS 60563
630.527.2320 FAX: 630.527.2321
www.kjww.com
PROJECT #:
Illinois Design Firm Registration #184-000973

KJWW ENGINEERING RESERVES PROPRIETARY RIGHTS, INCLUDING COPYRIGHTS, TO THIS DRAWING AND THE DATA SHOWN THEREON. SAID DRAWING AND/OR DATA ARE THE EXCLUSIVE PROPERTY OF KJWW ENGINEERING AND SHALL NOT BE USED OR REPRODUCED FOR ANY OTHER PROJECT WITHOUT THE EXPRESS WRITTEN APPROVAL AND PARTICIPATION OF KJWW ENGINEERING. © 2015 KJWW, P.C.

REFERENCE SCALE IN INCHES
0 1 2 3

	FERMI LAB	DATE
DESIGNED	P. MUELLER	3/2/2015
DRAWN	D. WILKINS	3/2/2015
CHECKED		
APPROVED		
SUBMITTED		

S W E PROJECT NORTH

SCALE:
1/8"=1'-0"
8 0 8 16
SCALE FEET

NOT FOR CONSTRUCTION

FERMI NATIONAL ACCELERATOR LABORATORY
UNITED STATES DEPARTMENT OF ENERGY

SBN FAR DETECTOR BUILDING
MEZZANINE LEVEL MECHANICAL PLAN

DRAWING NO. 6-7-93 M-3 REV. 5

02 MAR. 2015

KEYNOTES (#)

1. ALL MECHANICAL DUCTWORK, PIPING, EQUIPMENT, AND ACCESSORIES SHALL NOT CROSS OPENING IN GRADE LEVEL FLOOR ABOVE DETECTOR UNLESS OTHERWISE NOTED ON DRAWINGS. REFER TO ARCHITECTURAL DRAWINGS FOR MORE INFORMATION REGARDING THE FLOOR OPENING DIMENSIONS, DETECTOR CLEARANCES, AND OVERHEAD CRANE CLEARANCES.
2. REFER TO SHEET M-6 FOR GAS METER CONCRETE SLAB DETAIL AND GAS METER AND REGULATOR PIPING DETAIL.

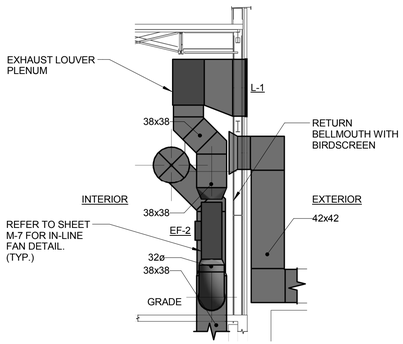

SECTION A

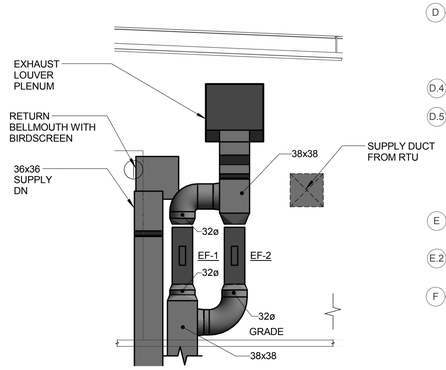

SECTION B

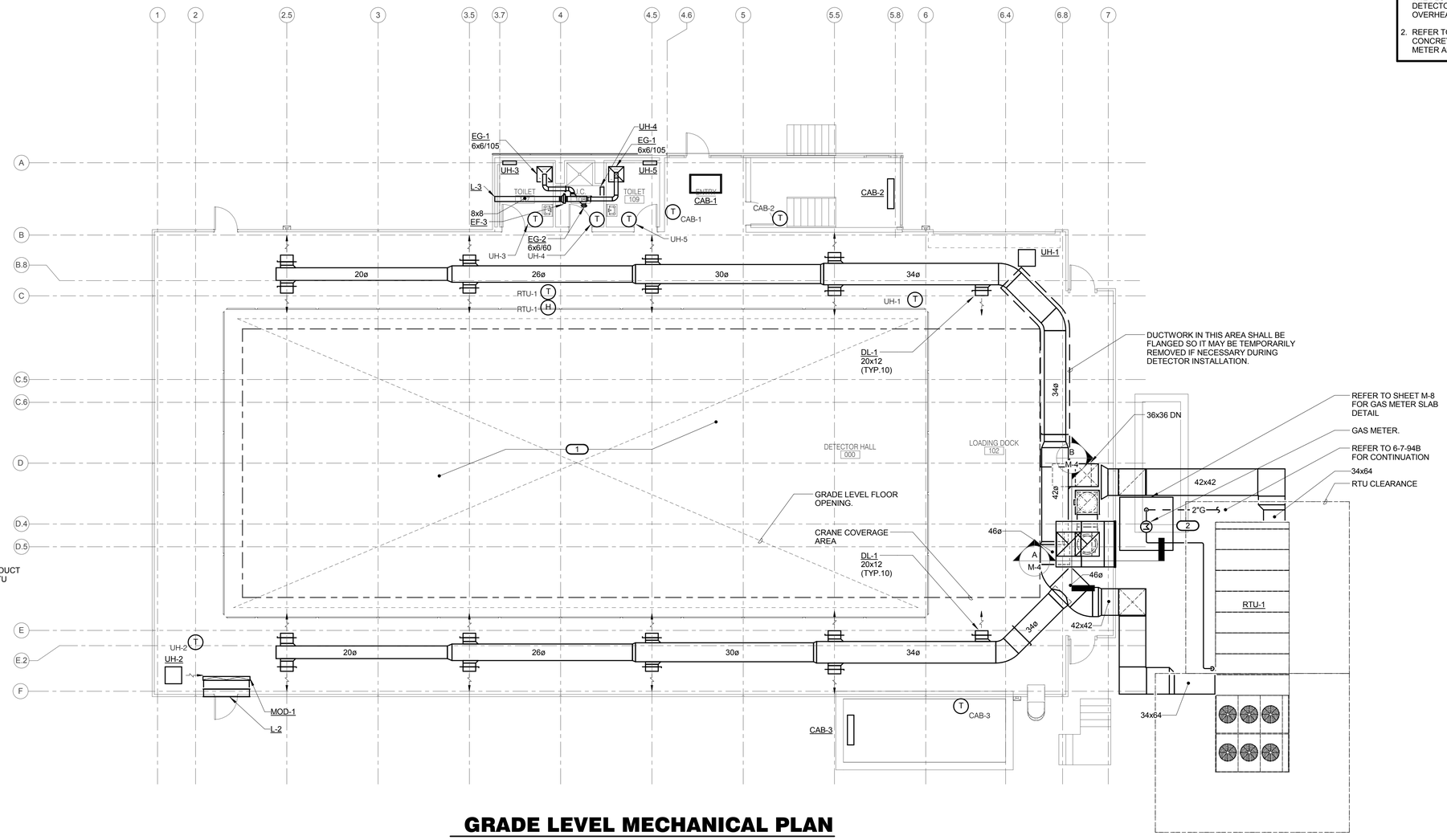

GRADE LEVEL MECHANICAL PLAN

C:\Revit Local Files\MEP15_14.0872.00 - Fermi Lab - Far Detector_CENTRAL_wellsma.rvt

3/2/2015 5:19:51 PM

REV.	DATE	REVISIONS
5	03/02/15	ISSUED FOR 90% REVIEW
4	02/23/15	ISSUED FOR 90% COST ESTIMATE
3	01/26/15	ISSUED FOR 60% REVIEW
2	01/16/15	ISSUED FOR PRICING
1	12/23/14	SCHEMATIC DESIGN

KJWW ENGINEERING CONSULTANTS
The FUTURE Built SMARTER.
1100 WARRENVILLE ROAD, SUITE 400W
NAPERVILLE, ILLINOIS 60563
630.527.2320 FAX: 630.527.2321
www.kjww.com
PROJECT #:
Illinois Design Firm Registration #184-000973

KJWW ENGINEERING RESERVES PROPRIETARY RIGHTS, INCLUDING COPYRIGHTS, TO THIS DRAWING AND THE DATA SHOWN THEREON. SAID DRAWING AND/OR DATA ARE THE EXCLUSIVE PROPERTY OF KJWW ENGINEERING AND SHALL NOT BE USED OR REPRODUCED FOR ANY OTHER PROJECT WITHOUT THE EXPRESS WRITTEN APPROVAL AND PARTICIPATION OF KJWW ENGINEERING. © 2015 KJWW, P.C.

REFERENCE SCALE IN INCHES 0 1 2 3

	FERMI LAB	DATE
DESIGNED	P. MUELLER	3/2/2015
DRAWN	D. WILKINS	3/2/2015
CHECKED		
APPROVED		
SUBMITTED		

S W E PROJECT NORTH

SCALE: 1/8"=1'-0" 8 0 8 16 SCALE FEET

NOT FOR CONSTRUCTION

FERMI NATIONAL ACCELERATOR LABORATORY
UNITED STATES DEPARTMENT OF ENERGY

SBN FAR DETECTOR BUILDING

GRADE LEVEL MECHANICAL PLAN

DRAWING NO. 6-7-93 M-4 REV. 5

02 MAR. 2015

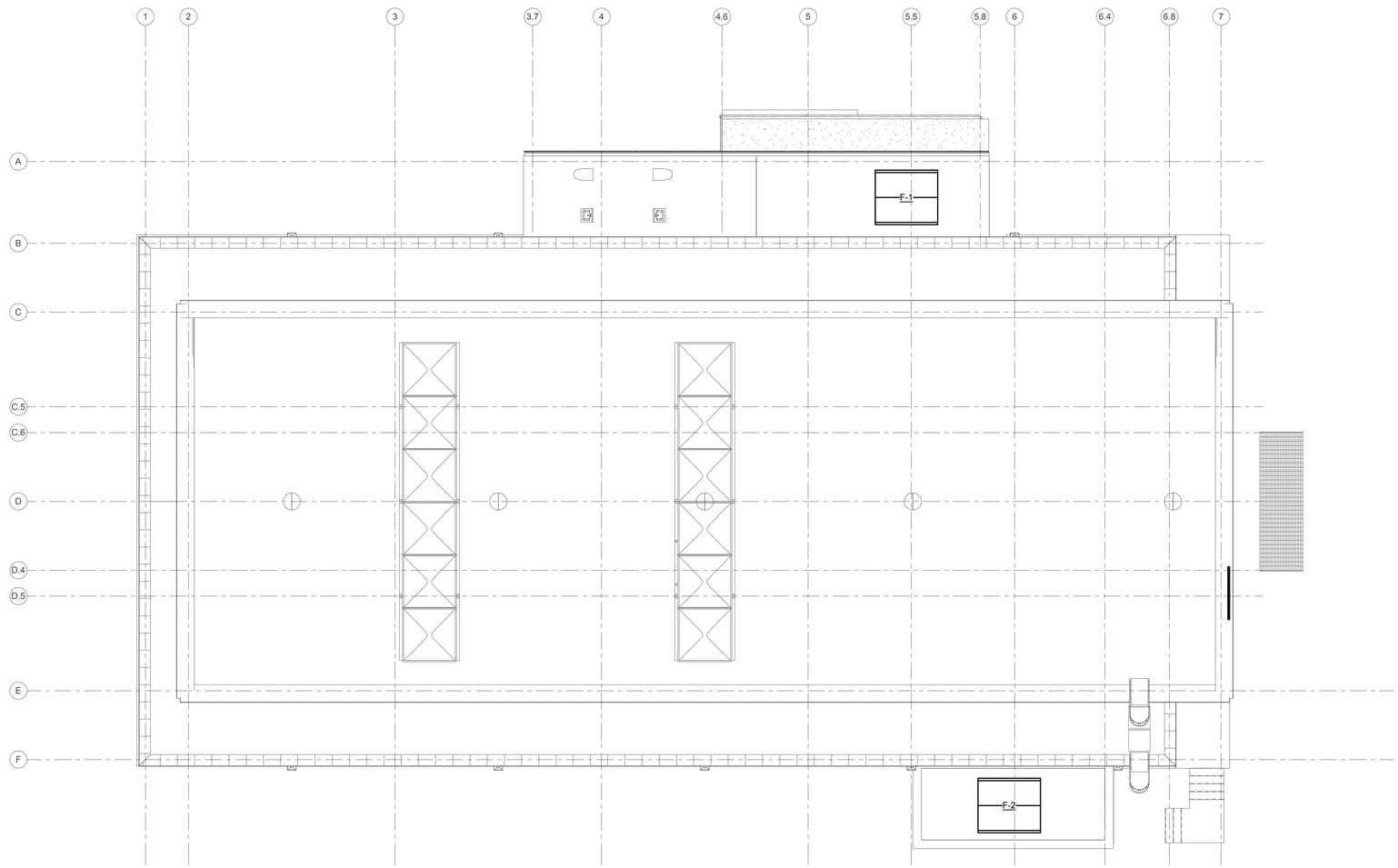

ROOF LEVEL MECHANICAL PLAN

C:\Revit Local Files\MEP15_14.0872.00 - Fermi Lab - Far Detector_CENTRAL_wellsma.rvt

3/2/2015 5:19:52 PM

REV.	DATE	REVISIONS
5	03/02/15	ISSUED FOR 90% REVIEW
4	02/23/15	ISSUED FOR 90% COST ESTIMATE
3	01/26/15	ISSUED FOR 60% REVIEW
2	01/16/15	ISSUED FOR PRICING
1	12/23/14	SCHEMATIC DESIGN

KJWW ENGINEERING CONSULTANTS
The FUTURE. Built SMARTER.®
1100 WARRENVILLE ROAD, SUITE 400W
NAPERVILLE, ILLINOIS 60563
630.527.2320 FAX: 630.527.2321
www.kjww.com
PROJECT #:
Illinois Design Firm Registration #184-000973

KJWW ENGINEERING RESERVES PROPRIETARY RIGHTS, INCLUDING COPYRIGHTS, TO THIS DRAWING AND THE DATA SHOWN THEREON. SAID DRAWING AND/OR DATA ARE THE EXCLUSIVE PROPERTY OF KJWW ENGINEERING AND SHALL NOT BE USED OR REPRODUCED FOR ANY OTHER PROJECT WITHOUT THE EXPRESS WRITTEN APPROVAL AND PARTICIPATION OF KJWW ENGINEERING. © 2015 KJWW, P.C.

REFERENCE SCALE IN INCHES
0 1 2 3

	FERMI LAB	DATE
DESIGNED	P. MUELLER	3/2/2015
DRAWN	D. WILKINS	3/2/2015
CHECKED		
APPROVED		
SUBMITTED		

S W E PROJECT NORTH

SCALE:
1/8"=1'-0"
8 0 8 16
SCALE FEET

NOT FOR CONSTRUCTION

FERMI NATIONAL ACCELERATOR LABORATORY
UNITED STATES DEPARTMENT OF ENERGY

SBN FAR DETECTOR BUILDING
ROOF LEVEL MECHANICAL PLAN

DRAWING NO. 6-7-93 M-5 REV. 5

02 MAR. 2015

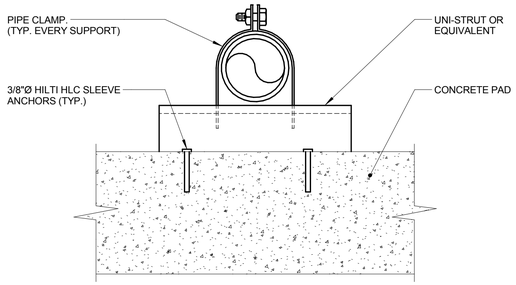

EXTERIOR PIPE SUPPORT DETAIL

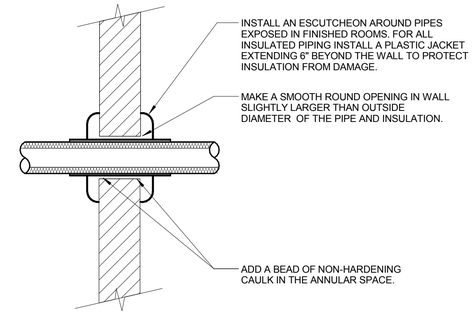

PIPE THROUGH NON-FIRE RATED WALL

NOTES:

1. THIS DETAIL APPLIES TO ALL PIPES. THE INTENTION IS TO CONTINUE THE INSULATION AND VAPOR BARRIER THROUGH ALL PENETRATIONS. PERMIT THERMAL EXPANSION WITHOUT DAMAGING INSULATION, AND TO SEAL AIRTIGHT AROUND INSULATED AND UNINSULATED PIPES FOR NOISE TRANSMISSION CONTROL.
2. FLOOR OPENINGS ARE SIMILAR SEE SPECIFICATION SECTION 15140 FOR DIFFERENCES BETWEEN FLOOR AND WALL PENETRATIONS.
3. SEE SPECIFICATION SECTIONS 15080 AND 15140 FOR ADDITIONAL INFORMATION.

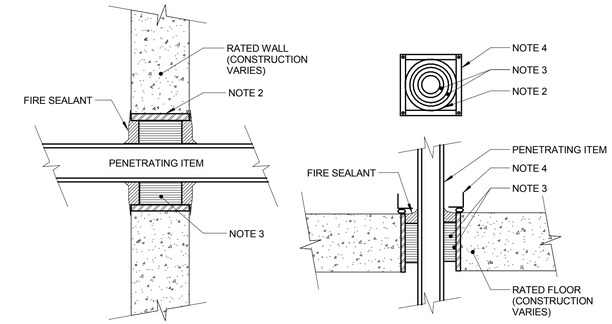

RATED FIRE BARRIER PENETRATION

NOTES:

1. THIS GENERAL DETAIL APPLIES TO ALL ITEMS PENETRATING FIRE RATED WALLS OR FLOORS. THE INTENT IS TO MAINTAIN THE FIRE RATING AND TO ALLOW LONGITUDINAL MOVEMENT. REFER TO SPECIFICATION SECTION 15080 FOR SELECTION OF THROUGH PENETRATION FIRE STOPPING.
2. SCHEDULE 5 PIPE SLEEVE EMBEDDED IN WALL OR FLOOR, OR SMOOTH CORE DRILL. EACH SUBCONTRACTOR FURNISHES SLEEVE TO G.C., COORDINATES SLEEVE LOCATIONS AND DEBURS SLEEVE. G.C. BUILDS SLEEVE INTO WALL OR FLOOR ALLOWING NO GAP AROUND SLEEVE. IF SLEEVE IS NOT PROVIDED WHEN WALL OR FLOOR IS BUILT, SUBCONTRACTOR SHALL INSTALL SLEEVE. SLEEVE SIZE SHALL ALLOW ANNULAR SPACE REQUIRED BY THE SELECTED FIRE STOP SYSTEM.
3. INSTALL BACKING MATERIAL, SUCH AS MINERAL WOOL SAFING, AS REQUIRED FOR FIRE STOP SYSTEM. INSTALL IN ACCORDANCE WITH FIRE STOP SYSTEM APPLICATION LISTING. SECURE TO WALL OR FLOOR TO ALLOW LONGITUDINAL MOVEMENT OF PENETRATING ITEM WITHOUT MOVEMENT OF FIRE BARRIER.
4. WATER-TIGHT WELDED 1"x1" 20 GAUGE MINIMUM GALVANIZED SHEET METAL ANGLE FRAME, BY SUBCONTRACTOR IN EQUIPMENT ROOMS FOR WATER STOP. PLACE A BEAD OF WATERPROOF SEALANT BETWEEN FLOOR AND BOTTOM OF ANGLE FRAME. SECURE TO FLOOR WITH MASONRY ANCHORS IN CORNERS AND ON 12" MAXIMUM CENTERS. MULTIPLE PENETRATING ITEMS MAY BE ENCLOSED IN ONE FRAME.

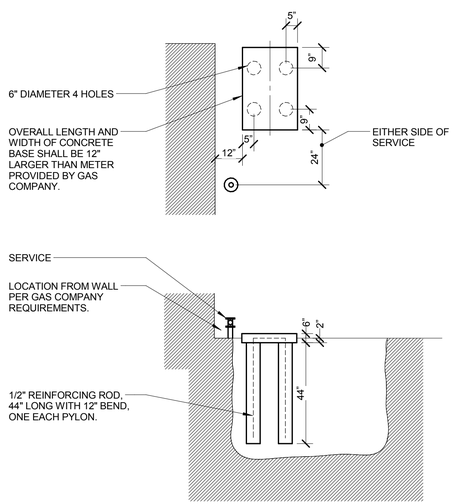

GAS METER CONCRETE SLAB DETAIL

NOTES:

1. CONCRETE SLAB SHALL BE REINFORCED WITH 6x6-W2.9xW2.9 WWF WIRE MESH SET 3" OFF GRADE.
2. MAINTAIN 18" CLEARANCE IN FRONT OF SLAB.
3. MINIMUM STRENGTH OF CONCRETE SHALL BE 3000 PSI AFTER 28 DAYS.
4. MINIMUM SET TIME SHALL BE 3 DAYS BEFORE SETTING METER.

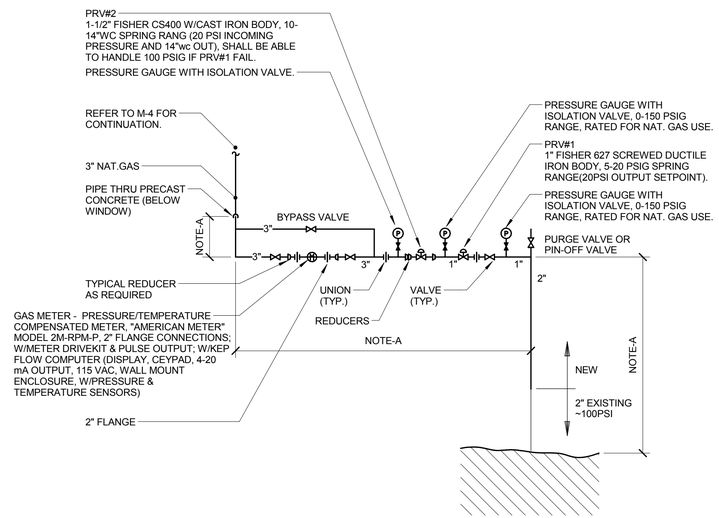

GAS METER AND REGULATOR PIPING DETAIL

NOTES:

1. MINIMIZE THE SPACE TO BE OCCUPIED BY THIS PIPING-COORDINATE WITH CONSTRUCTION MANAGER. (NOTE THIS DISTANCE IN SHOP DWG SUBMITTALS.)
2. PROVIDE PIPE SUPPORT (NOT SHOWN) PER SPEC AND STANDARD INDUSTRY PRACTICE.
3. PAINT GAS PIPING & SUPPORT GRAY COLOR TO MATCH EXISTING SYSTEM AND BUILDING.

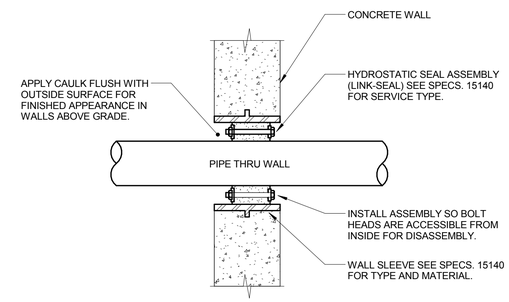

EXTERIOR WALL PENETRATION

NOTES:

1. SUBCONTRACTOR MAY FABRICATE PIPE SLEEVE.
2. SEAL SELECTION BASED ON OLD. OF PIPE THRU WALL AND I.D. OF SLEEVE.
3. SLEEVE NOT REQUIRED FOR CORE DRILLED PENETRATIONS.

C:\Revit Local Files\MEP15_14.0872.00 - Fermi Lab - Far Detector_CENTRAL_wellsma.rvt

3/2/2015 5:19:53 PM

REV.	DATE	REVISIONS
5	03/02/15	ISSUED FOR 90% REVIEW
4	02/23/15	ISSUED FOR 90% COST ESTIMATE
3	01/26/15	ISSUED FOR 60% REVIEW
2	01/16/15	ISSUED FOR PRICING
1	12/23/14	SCHEMATIC DESIGN

KJWW ENGINEERING CONSULTANTS
The FUTURE Built SMARTER
1100 WARRENVILLE ROAD, SUITE 400W
NAPERVILLE, ILLINOIS 60563
630.527.2320 FAX: 630.527.2321
www.kjww.com
PROJECT #:
Illinois Design Firm Registration #184-000973

KJWW ENGINEERING RESERVES PROPRIETARY RIGHTS, INCLUDING COPYRIGHTS, TO THIS DRAWING AND THE DATA SHOWN THEREON. SAID DRAWING AND/OR DATA ARE THE EXCLUSIVE PROPERTY OF KJWW ENGINEERING AND SHALL NOT BE USED OR REPRODUCED FOR ANY OTHER PROJECT WITHOUT THE EXPRESS WRITTEN APPROVAL AND PARTICIPATION OF KJWW ENGINEERING. © 2015 KJWW, P.C.

REFERENCE SCALE IN INCHES
0 1 2 3

FERMI LAB		DATE
DESIGNED	P. MUELLER	3/2/2015
DRAWN	D. WILKINS	3/2/2015
CHECKED		
APPROVED		
SUBMITTED		

SCALE:

NOT FOR CONSTRUCTION

FERMI NATIONAL ACCELERATOR LABORATORY
UNITED STATES DEPARTMENT OF ENERGY

SBN FAR DETECTOR BUILDING
MECHANICAL DETAILS

DRAWING NO. 6-7-93 M-6 REV. 5

02 MAR. 2015

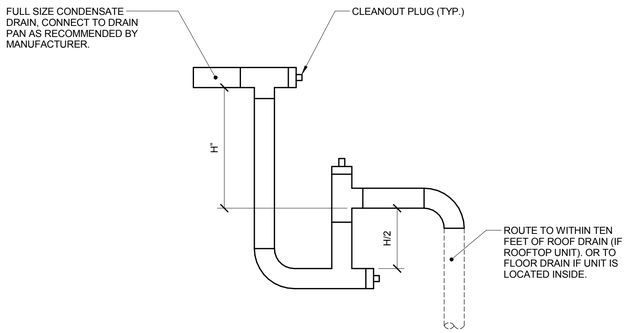

CONDENSATE TRAP DETAIL (DRAW-THROUGH)

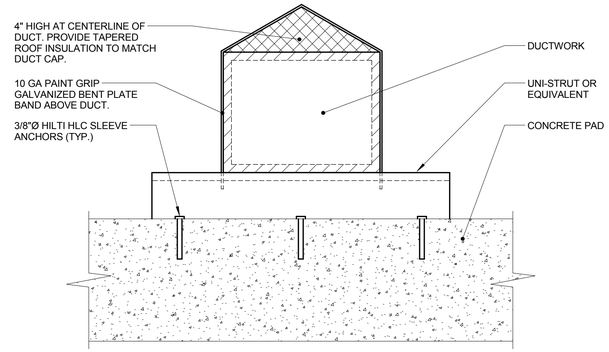

EXTERIOR DUCT SUPPORT DETAIL

NOTES:
1. DUCT SUPPORT SHALL BE RATED FOR 30 PSF SNOW LOAD AND 20 PSF WIND LOAD.
2. PAINT RAIN COVER AND DUCT SUPPORTS TO MATCH DUCT.

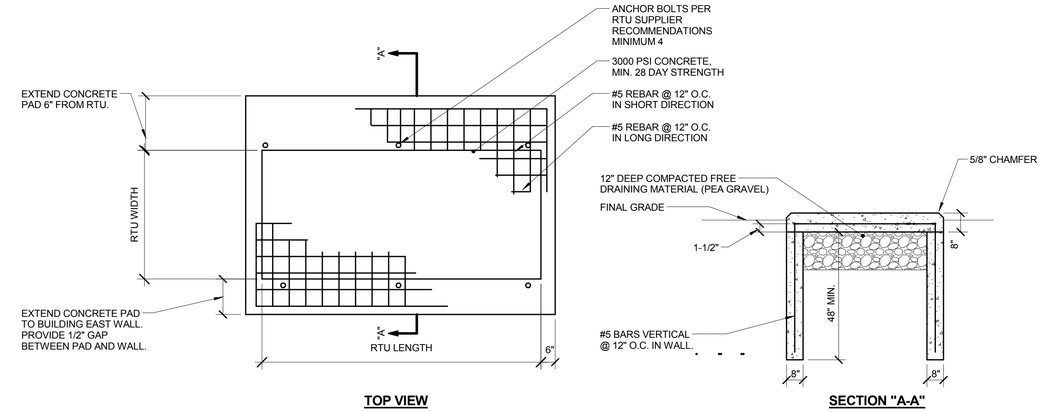

RTU CONCRETE PAD DETAIL

NOTES:

1. COORDINATE PAD DIMENSIONS WITH RTU SUPPLIER PRIOR TO START OF CONSTRUCTION.

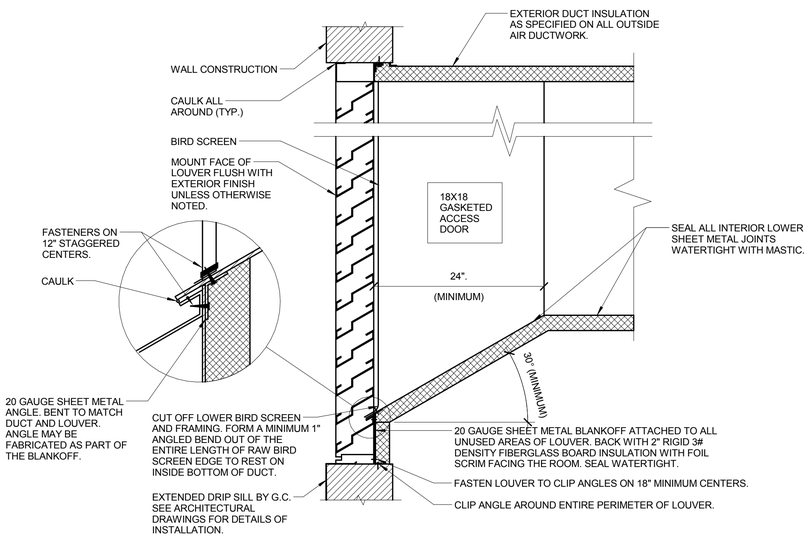

LOUVER INSTALLATION DETAIL

NOTES:

1. SEAL ALL JOING ON BOTTOM INTERIOR SURFACE OF DUCT WITHIN 6'-0" OF THE LOUVER WATER TIGHT.
2. MOUNT BOTTOM OF INTAKE LOUVERS AT LEAST 40" ABOVE GRADE OR ROOF ELEVATION TO MINIMIZE CHANCES OF SNOW DRIFTING INTO THE LOUVER.
3. CAULK SHEETMETAL SCREWS WHERE THE PENETRATE METAL.

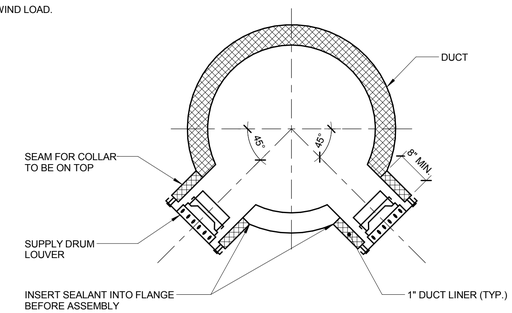

SUPPLY REGISTER DETAIL

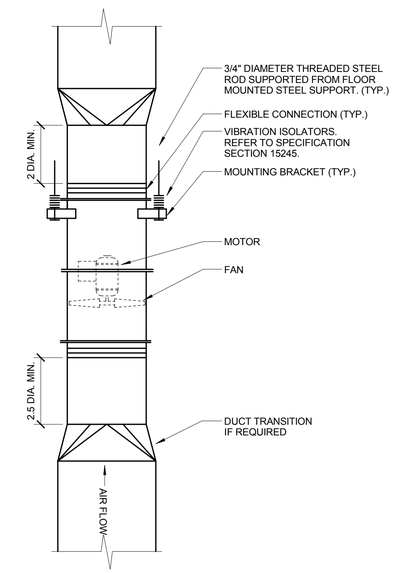

IN-LINE FAN DETAIL

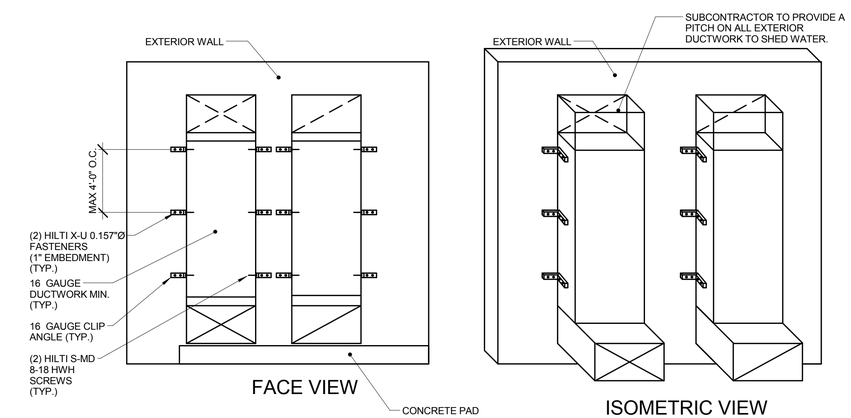

DUCT MOUNTED WALL SUPPORT DETAIL

REV.	DATE	REVISIONS
5	03/02/15	ISSUED FOR 90% REVIEW
4	02/23/15	ISSUED FOR 90% COST ESTIMATE
3	01/26/15	ISSUED FOR 60% REVIEW
2	01/16/15	ISSUED FOR PRICING
1	12/23/14	SCHEMATIC DESIGN

KJWW ENGINEERING CONSULTANTS
The FUTURE Built SMARTER
1100 WARRENVILLE ROAD, SUITE 400W
NAPERVILLE, ILLINOIS 60563
630.527.2320 FAX: 630.527.2321
www.kjww.com
PROJECT #:
Illinois Design Firm Registration #184-000973

KJWW ENGINEERING RESERVES PROPRIETARY RIGHTS, INCLUDING COPYRIGHTS, TO THIS DRAWING AND THE DATA SHOWN THEREON. SAID DRAWING AND/OR DATA ARE THE EXCLUSIVE PROPERTY OF KJWW ENGINEERING AND SHALL NOT BE USED OR REPRODUCED FOR ANY OTHER PROJECT WITHOUT THE EXPRESS WRITTEN APPROVAL AND PARTICIPATION OF KJWW ENGINEERING. © 2015 KJWW, P.C.

REFERENCE SCALE IN INCHES: 0 1 2 3

FERMI LAB		DATE
DESIGNED	P. MUELLER	3/2/2015
DRAWN	D. WILKINS	3/2/2015
CHECKED		
APPROVED		
SUBMITTED		

SCALE:

NOT FOR CONSTRUCTION

FERMI NATIONAL ACCELERATOR LABORATORY

UNITED STATES DEPARTMENT OF ENERGY

SBN FAR DETECTOR BUILDING

MECHANICAL DETAILS

DRAWING NO. 6-7-93 M-7 REV. 5

02 MAR. 2015

C:\Revit Local Files\MEP15_14.0872.00 - Fermi Lab - Far Detector_CENTRAL_wellsma.rvt

3/2/2015 5:19:54 PM

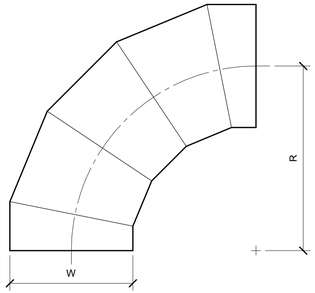

ROUND
RADIUS ELBOW
SMOOTH OR 5 GORE (MINIMUM)

R/W = 1.5 (MINIMUM)

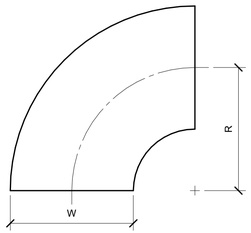

RECTANGULAR
RADIUS ELBOW
TYPE RE1

R/W = 1.0 (MINIMUM)
R/W < 1.0 SHALL BE TYPE RE3

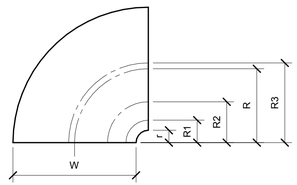

RECTANGULAR
RADIUS ELBOW WITH VANES
TYPE RE3

REFER TO SMACNA HVAC SYSTEMS DUCT DESIGN MANUAL, FOURTH EDITION, SECTION 5.14 "SPLITTER VANES" AND SMACNA HVAC DUCT CONSTRUCTION STANDARDS, THIRD EDITION, FIGURES 4-2 AND 4-9 AND CHARTS 4-1 AND 4-1M. ELBOW SHALL HAVE THREE SPLITTER VANES AND r/W = 0.10 (R/W = 0.60) UNLESS NOTED OTHERWISE.

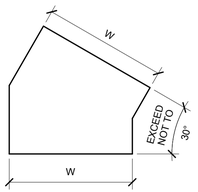

RECTANGULAR
MITERED ELBOW
TYPE RE6

USE ONLY AS PART OF OFFSETS AND TRANSITIONS PER FIGURE 4-7 TYPE 2 OR AS SHOWN ON DRAWINGS. OFFSETS ABOVE 30° SHALL BE TYPE RE1.

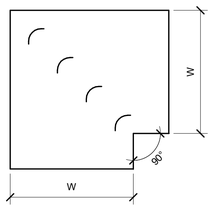

RECTANGULAR
MITERED ELBOW
WITH VANES
TYPE RE2

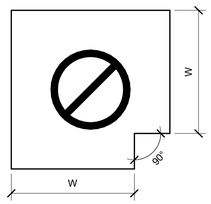

RECTANGULAR / ROUND
MITERED ELBOW
WITHOUT VANES
TYPE RE4

NOT ALLOWED

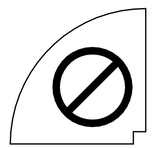

RECTANGULAR
RADIUS ELBOW WITH
SQUARE THROAT

NOT ALLOWED

ELBOW CONSTRUCTION

NOTES:

1. BEAD, CROSSBREAK, AND REINFORCE FLAT SURFACES AS IN STRAIGHT DUCT.
2. REFER TO SPECIFICATIONS FOR ADDITIONAL INFORMATION.
3. DEFAULT ELBOW SHALL BE TYPE "RE1".
4. ELBOW TYPES SHALL BE INSTALLED AS SHOWN AND NOT BE SUBSTITUTED WITHOUT PERMISSION. EXCEPTION: RE1 OR RE3 MAY BE SUBSTITUTED FOR RE2.

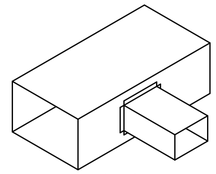

STRAIGHT TAP
BUTT FLANGE

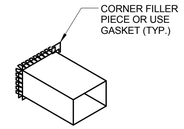

CLINCH LOCK

NOTE STRAIGHT TAP WITH BUTT FLANGE FOR BRANCH AND TEE CONNECTION IN RECTANGULAR DUCTS UNDER 1" PRESSURE CLASS ONLY.

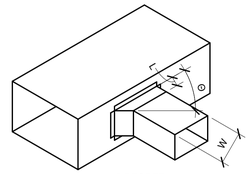

45 DEGREE
ENTRY Θ 45°
(L = 4" OR w/4; WHICHEVER IS LARGER)

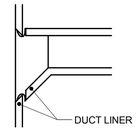

LINED DUCT CONNECTION
(NO EXPOSED LINER EDGES)

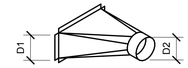

D1>D2

45 DEGREE LEAD IN

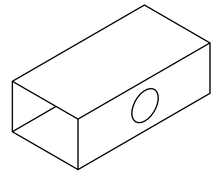

45 DEGREE
ENTRY Θ 45°

FLANGED

CONICAL

DOVETAIL JOINT

BRANCH CONNECTIONS

NOTES:

1. DO NOT USE CONNECTIONS WITH SCOOPS.
2. FIT ALL CONNECTIONS TO AVOID VISIBLE OPENINGS AND SECURE THEM SUITABLY FOR THE PRESSURE CLASS.
3. ADDITIONAL MECHANICAL FASTENERS ARE REQUIRED FOR 4"W.G. AND OVER.
4. SEE SPECIFICATIONS FOR ADDITIONAL INFORMATION.

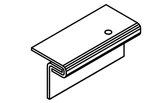

SINGLE CORNER SEAM

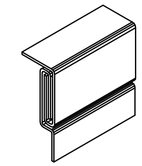

DOUBLE CORNER SEAM

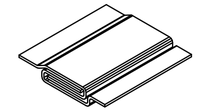

GROOVED SEAM

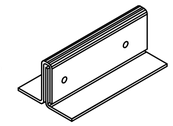

STANDING SEAM

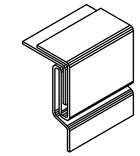

PITTSBURGH LOCK

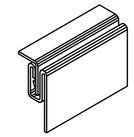

BUTTON PUNCH SNAP LOCK

SEAM LOCATIONS

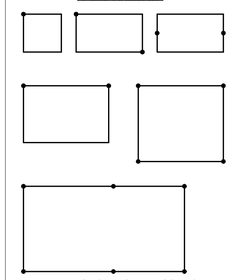

NUMBER OF SEAMS AND LOCATION VARIES WITH JOINT TYPE, SHEET ROCK AND ASSEMBLY PLANS.

LONGITUDINAL SEAMS - RECTANGULAR DUCT

NOTES:

1. SEE SPECIFICATIONS FOR ADDITIONAL INFORMATION.

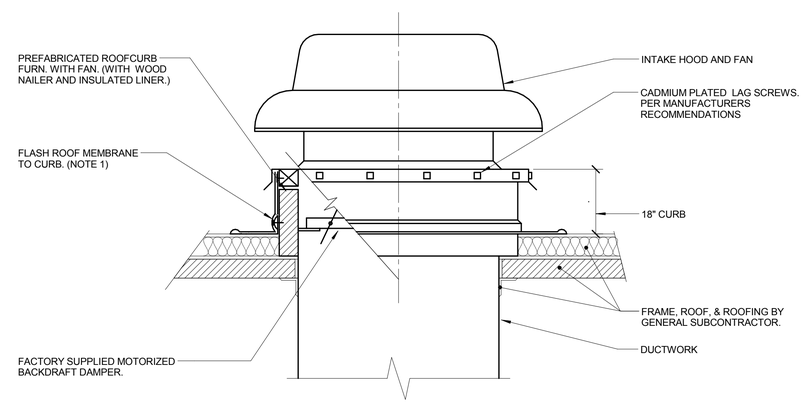

ROOF MOUNTED ODH SUPPLY FAN DETAIL

NOTES:

1. ALL ROOF FLASHING SHALL BE PER ROOFING MANUFACTURERS RECOMMENDATIONS.

REV.	DATE	
5	03/02/15	ISSUED FOR 90% REVIEW
4	02/23/15	ISSUED FOR 90% COST ESTIMATE
3	01/26/15	ISSUED FOR 60% REVIEW
2	01/16/15	ISSUED FOR PRICING
1	12/23/14	SCHEMATIC DESIGN

REVISIONS

KJWW ENGINEERING CONSULTANTS
The FUTURE. Built SMARTER.®
1100 WARRENVILLE ROAD, SUITE 400W
NAPERVILLE, ILLINOIS 60563
630.527.2320 FAX: 630.527.2321
www.kjww.com
PROJECT #:
Illinois Design Firm Registration #184-000973

KJWW ENGINEERING RESERVES PROPRIETARY RIGHTS, INCLUDING COPYRIGHTS, TO THIS DRAWING AND THE DATA SHOWN THEREON. SAID DRAWING AND/OR DATA ARE THE EXCLUSIVE PROPERTY OF KJWW ENGINEERING AND SHALL NOT BE USED OR REPRODUCED FOR ANY OTHER PROJECT WITHOUT THE EXPRESS WRITTEN APPROVAL AND PARTICIPATION OF KJWW ENGINEERING. © 2015 KJWW, P.C.

REFERENCE SCALE IN INCHES
0 1 2 3

	FERMI LAB	DATE
DESIGNED	P. MUELLER	3/2/2015
DRAWN	D. WILKINS	3/2/2015
CHECKED		
APPROVED		
SUBMITTED		

SCALE:

NOT FOR CONSTRUCTION

FERMI NATIONAL ACCELERATOR LABORATORY

UNITED STATES DEPARTMENT OF ENERGY

SBN FAR DETECTOR BUILDING

MECHANICAL DETAILS

DRAWING NO. **6-7-93** **M-8** REV. **5**

02 MAR. 2015

C:\Revit Local Files\MEP15_14.0872.00 - Fermi Lab - Far Detector_CENTRAL_wellsma.rvt

3/2/2015 5:19:54 PM

ROOFTOP AIR HANDLING UNIT SCHEDULE - GAS/ELECTRIC

SYMBOL	RTU-1
SERVICE	BUILDING
SUPPLY FAN	
CFM	27,000
MINIMUM CFM	9,900
EXTERNAL STATIC PRESSURE	1.00
FAN RPM (NOTE D)	1,100
BHP (NOTE E)	45.66
MHP (NOTE E)	50
RETURN FAN	
CFM	24,600
MINIMUM CFM	9,020
EXTERNAL STATIC PRESSURE	0.75
FAN RPM (NOTE D)	700
BHP (NOTE E)	11.72
MHP (NOTE E)	15
MINIMUM OUTSIDE AIR CFM	830
HEATING - GAS	
MINIMUM EFFICIENCY AFUE	0.82
MINIMUM OUTPUT MBH	697
GAS PRESSURE IN. W.C.	
COOLING COIL - DX	
EAT °F DB / WB	80.4 / 64
MAX. LAT FROM UNIT°F DB / WB	59.2 / 55.8
GROSS TOTAL CAPACITY [MBH]	857
AMBIENT TEMPERATURE °F	95 / 78
REFRIGERANT	R-410A
EER / IEER	9.9 / 16.7
HOT GAS REHEAT - DX	
LATENT CAPACITY [MBH]	291.4
SENSIBLE CAPACITY [MBH]	471.1
MOISTURE REMOVAL [GPH]	31.0
FILTERS	
PRE-FILTER	MERV 8
FINAL FILTER	MERV 14
CURB (NOTE G)	MFR (18")
ELECTRICAL	
VOLT-PHASE	480-3
FLA/RLA	80.5 / 62.6
MCA	194.25
MOCP AMPS	225
DISCONNECT BY (NOTE A)	MFR
DISCONNECT TYPE (NOTE B)	VFD
CONTROLLER/STARTER BY (NOTE A)	MFR
CONTROLLER/STARTER TYPE (NOTE C)	VFD
MANUFACTURER	TRANE
MODEL NUMBER	SFHLF70
REMARKS	NOTE 1

NOTES:
1. COMPRESSORS SHALL BE VARIABLE SPEED TYPE.
2. PROVIDE SHAFT GROUNDING AS REQUIRED IN THE MOTOR SPECIFICATION 23 05 13.
3. UNIT SHALL BE CONFIGURED FOR HORIZONTAL DISCHARGE AND RETURN.

FAN SCHEDULE

SYMBOL	SERVICE	CFM	EXT SP IN. W.C.	WHEEL DIA. INCHES	FAN RPM (NOTE F)	DRIVE	BACKDRAFT DAMPER	CURB TYPE (NOTE G)	ELECTRICAL							MANUFACTURER	MODEL	REMARKS
									BHP (NOTE E)	MHP (NOTE E)	VOLT-PHASE	DISCONNECT		CONTROLLER/STARTER				
												BY (NOTE A)	TYPE (NOTE B)	BY (NOTE A)	TYPE (NOTE C)			
EF-1	ODH EXHAUST	7,500	1.25	24.4	1,770	DIRECT	GRAVITY	N/A	2.65	3.0	480-3	EC	VFD	EC	VFD	GREENHECK	AX-63-190-0428-A30	NOTE 1,2
EF-2	ODH EXHAUST	7,500	1.25	24.4	1,770	DIRECT	GRAVITY	N/A	2.7	3.0	480-3	EC	VFD	EC	VFD	GREENHECK	AX-54-190-0413-M50	NOTE 1,2
EF-3	TOILETS	270	1.0	-	1,350	DIRECT	GRAVITY	N/A	0.18	0.20	120-1	MFR	NF	MFR	NF	GREENHECK	CSP-A390	
F-1	STAIR 1	7,500	0.15	36.0	788	BELT	ELECTRIC	MFR (18")	0.64	0.75	480-3	EC	VFD	EC	VFD	GREENHECK	RBCS-3H30-7	NOTE 1,2,3
F-2	STAIR 2	7,500	0.15	36.0	788	BELT	ELECTRIC	MFR (18")	0.64	0.75	480-3	EC	VFD	EC	VFD	GREENHECK	RBCS-3H30-7	NOTE 1,2,3

NOTES:
1. PROVIDE SHAFT GROUNDING AS REQUIRED IN THE MOTOR SPECIFICATION 23 05 13.
2. PROVIDE 24V CONTROL CONTACTS ON VFD FOR FUTURE CONNECTION TO ODH CONTROLS BY FERMILAB.

UNIT HEATER SCHEDULE - ELECTRIC

SYMBOL	SERVICE	TYPE	CFM	AIR TEMP RISE °F	STAGES	ELECTRICAL							MANUFACTURER	MODEL	REMARKS
						FAN HP	RPM	KW	VOLT/ PHASE/WIRE	DISCONNECT		CONTROLLER/STARTER			
										BY (NOTE A)	TYPE (NOTE B)	BY (NOTE A)			
UH-1	LOADING	VERTICAL	3100	51	1	1/5	1550	50	480 / 3 / 4	EC	NF	MFR	TRANE	UHEC503DACA	NOTE 2,3
UH-2	MAKE UP AIR LOUVER	HORIZONTAL	3100	51	1	1/5	1550	50	480 / 3 / 4	EC	NF	MFR	TRANE	UHEC503DACA	NOTE 2
UH-3	TOILET SE	HORIZONTAL	245	27	1	-	1,400	2.0	208 / 1 / 3	MFR.	NF	MFR	TRANE	UHWA201A2AT	NOTE 1
UH-4	JANITOR	HORIZONTAL	245	27	1	-	1,400	2.0	208 / 1 / 3	MFR.	NF	MFR	TRANE	UHWA201A2AT	NOTE 1
UH-5	TOILET NW	HORIZONTAL	245	27	1	-	1,400	2.0	208 / 1 / 3	MFR.	NF	MFR	TRANE	UHWA201A2AT	NOTE 1

NOTES:
1. HEAVY DUTY, WALL SURFACE MOUNTED, ELECTRIC UNIT HEATER.
2 COORDINATE COLOR SELECTION WITH FERMILAB.
3. PROVIDE AND INSTALL MANUFACTURER LOUVER CONE DIFFUSER ACCESSORY BY FOR INCREASED FLOOR COVERAGE.
4. TWO-SPEED MOTOR FOR HIGH-LOW FAN OPERATION. HIGH SPEED PERFORMANCE IS INDICATED IN SCHEDULE.

CABINET HEATER SCHEDULE - ELECTRIC

SYMBOL	SERVICE	TYPE	NOMINAL CFM	CABINET			ELECTRICAL								MANUFACTURER	MODEL	REMARKS
				H	W	D	FAN HP	RPM	ELEMENT KW	VOLT/ PHASE/ WIRE	FLA/ RLA	DISCONNECT		CONTROLLER/ STARTER			
												BY (NOTE A)	TYPE (NOTE B)	BY (NOTE A)			
CAB-1	ENTRY	HORIZONAL RECESSED	544	47	30	11	0.24	1,048	10	480 / 3 / 4	17.8	EC	NF	MFR	TRANE	FFEB06	NOTE 1,2,4
CAB-2	STAIR 1	VERTICAL EXPOSED WALL HUNG	544	47	25	9.875	0.24	1,048	10	480 / 3 / 4	17.8	EC	NF	MFR	TRANE	FFAB06	NOTE 1,3,4
CAB-3	STAIR 2	VERTICAL EXPOSED WALL HUNG	544	47	25	9.875	0.24	1,048	10	480 / 3 / 4	178.0	EC	NF	MFR	TRANE	FFAB06	NOTE 1,3,4

NOTES:
1. COORDINATE COLOR SELECTION WITH FERMILAB.
2. BOTTOM STAMPED INLET AND OUTLET LOUVER
3. BOTTOM STAMPED INLET AND TOP BAR GRILLE OUTLET.
4. FREE DISCHARGE EC MOTOR.

GRILLES REGISTERS & DIFFUSERS SCHEDULE

SYMBOL	MAT'L	TYPE	MARGIN (NOTE 1)	INLET SIZE (INCH)	FACE SIZE (INCH)	VOLUME DAMPER REQ'D	FINISH	MANUFACTURER	MODEL	REMARKS
DL-1	STEEL	DRUM LOUVER	1 1/4"	SEE DWG.	INLET +2	Y	NOTE 3	TITUS	DL-SV	HIGH CAPACITY LONG THROW DRUM LOUVER
EG-1	STEEL	PERFORATED FACE	LAY-IN	SEE DWG.	24x24	NO	NOTE 3	TITUS	PAR	DUCTED RETURN
EG-2	STEEL	35° DEFLECTION	1 1/4"	SEE DWG.	INLET +2	NO	NOTE 3	TITUS	350R	

NOTES:
1. SUBCONTRACTOR SHALL DETERMINE PROPER MARGIN STYLE TO MATCH CEILING CONSTRUCTION.
2. ALL RUN OUT DUCTWORK TO DIFFUSERS SHALL BE NECK SIZE UNLESS OTHERWISE NOTED.
3. FINAL FINISH SELECTION SHALL BE BY FERMILAB.

MOTOR OPERATED DAMPER SCHEDULE

SYMBOL	SERVICE	SIZE W x H (IN.)	CFM		HORIZONTAL OR VERTICAL BLADES	INSULATED	ACTUATOR TYPE	ACTUATOR STYLE	POWER FAILURE POSITION	POSITIVE POSITION FEEDBACK	REMARKS
			MAX.	MIN.							
MOD-1	GRADE LEVEL	72 x 96	15,000	0	HORIZONTAL	YES	ELECTRIC	TWO POSITION	OPEN	YES	NOTE 1

NOTES:
1. COORDINATE DAMPER ACTUATOR LOCATION AND MOUNTING REQUIREMENTS WITH TEMPERATURE CONTROL SUBCONTRACTOR.

SCHEDULE GENERAL NOTES:

A. DISCONNECT AND CONTROLLER STARTER FURNISHED AND INSTALLED BY:
- MFR = MANUFACTURER
- EC = ELECTRICAL SUBCONTRACTOR.
- MC = FURNISHED BY MECHANICAL SUBCONTRACTOR, INSTALLED BY ELECTRICAL SUBCONTRACTOR
- MFR/EC = FURNISHED LOOSE BY MANUFACTURER INSTALLED BY ELECTRICAL SUBCONTRACTOR
- ATC = AUTOMATIC TEMPERATURE CONTROL SUBCONTRACTOR

B. DISCONNECT TYPE:
- F = FUSED
- NF = NON-FUSED

C. CONTROLLER STARTER TYPE:
- FV = FULL VOLTAGE
- WYE = WYE-DELTA
- SS = SOLID STATE (SOFT START)
- MS = MANUAL STARTER
- VFD = VARIABLE FREQUENCY DRIVE
- VFD/B = VARIABLE FREQUENCY DRIVE WITH BYPASS

D. FAN RPM SHALL NOT EXCEED 110% OF SCHEDULED VALUE, WITH THE SCHEDULED WHEEL TYPE. SUBSTITUTION OF BI OR BIA FANS FANS FOR FC IS ACCEPTABLE IF EFFICIENCY IS NOT LOWER.

E. NO EQUIPMENT SHALL BE SELECTED ABOVE 90% OF MOTOR NAME PLATE RATING.

F. MUST BE WITHIN +/- 10% OF SCHEDULED RPM.

G. CURB TYPE:
- MFR = STANDARD CURB BY MANUFACTURER
- GC = BY GENERAL SUBCONTRACTOR
- SAC = SOUND ATTENUATOR CURB

LOUVER SCHEDULE

SYMBOL	SERVICE	CFM	SIZE W x H (IN.)	FREE AREA VEL. FPM	S.P. IN. W.C.	MANUFACTURER	MODEL	REMARKS
L-1	EF-1 & EF-2	15,000	72 x 72	750	0.11	RUSKIN	ELF375DX	NOTE 1
L-2	MAKE-UP AIR	15,000	72 x 96	545	0.07	RUSKIN	ELF375DX	NOTE 1
L-3	EF-3	270	12 x 12	795	0.13	RUSKIN	ELF375DX	NOTE 1

NOTES:
1. FINISH SHALL BE PVDF (KYNAR 500, HYLAR 5000, OR DURANAR). STANDARD COLOR - SELECTION BY FERMILAB.

C:\Revit Local Files\MEP15_14.0872.00 - Fermi Lab - Far Detector_CENTRAL_wellsma.rvt

3/2/2015 5:19:55 PM

REV.	DATE	REVISIONS
5	03/02/15	ISSUED FOR 90% REVIEW
4	02/23/15	ISSUED FOR 90% COST ESTIMATE
3	01/26/15	ISSUED FOR 60% REVIEW
2	01/16/15	ISSUED FOR PRICING
1	12/23/14	SCHEMATIC DESIGN

KJWW ENGINEERING CONSULTANTS
The FUTURE. Built SMARTER.®
1100 WARRENVILLE ROAD, SUITE 400W
NAPERVILLE, ILLINOIS 60563
630.527.2320 FAX: 630.527.2321
www.kjww.com
PROJECT #:
Illinois Design Firm Registration #184-000973

KJWW ENGINEERING RESERVES PROPRIETARY RIGHTS, INCLUDING COPYRIGHTS, TO THIS DRAWING AND THE DATA SHOWN THEREON. SAID DRAWING AND/OR DATA ARE THE EXCLUSIVE PROPERTY OF KJWW ENGINEERING AND SHALL NOT BE USED OR REPRODUCED FOR ANY OTHER PROJECT WITHOUT THE EXPRESS WRITTEN APPROVAL AND PARTICIPATION OF KJWW ENGINEERING. © 2015 KJWW, P.C.

REFERENCE SCALE IN INCHES
0 1 2 3

FERMI LAB		DATE
DESIGNED	P. MUELLER	3/2/2015
DRAWN	D. WILKINS	3/2/2015
CHECKED		
APPROVED		
SUBMITTED		

SCALE:

NOT FOR CONSTRUCTION

FERMI NATIONAL ACCELERATOR LABORATORY
UNITED STATES DEPARTMENT OF ENERGY

SBN FAR DETECTOR BUILDING
MECHANICAL SCHEDULES

DRAWING NO. 6-7-93 M-9 REV. 5

02 MAR. 2015

CONTROL SYMBOLS LIST

SYMBOL:	DESCRIPTION:	SYMBOL:	DESCRIPTION:
	FAN	FM	DUCT FLOW METER
	HEATING/ COOLING COIL	T	PROBE TEMPERATURE SENSOR
	FILTER	H	HUMIDISTAT SENSOR
EA	EXHAUST AIR	T	THERMOSTAT
FMCS	FACILITIES MONITORING AND CONTROL SYSTEM	T	TEMPERATURE SENSOR (DUCT MOUNTED)
MA	MIXED AIR	ACT	ACTUATOR
N.C.	NORMALLY CLOSED	CS	CURRENT SWITCH
N.O.	NORMALLY OPEN	FS	FLOW SENSOR (DUCT MOUNTED)
OA	OUTSIDE AIR	AI	ANALOG INPUT
ODH	OXYGEN DEFICIENCY HAZARD	AO	ANALOG OUTPUT
RA	RETURN AIR	DI	DIGITAL INPUT
SA	SUPPLY AIR	DO	DIGITAL OUTPUT
TCC	TEMPERATURE CONTROL SUBCONTRACTOR		
	OPPOSED BLADE DAMPER		
	PARALLEL BLADE DAMPER		

GENERAL CONTROL NOTES:

1. REFER TO EQUIPMENT SCHEDULES TO CROSS REFERENCE WHICH CONTROL DIAGRAMS APPLY TO WHICH ITEMS OF EQUIPMENT.
2. EACH D.I., D.O., A.I. AND A.O. POINT SHOWN FOR ALL CONTROL DIAGRAMS SHALL BE DISCRETE FROM ALL OTHER POINTS EXCEPT AS SPECIFICALLY NOTED.
3. ALL WIRING, CONTROL COMPONENTS, DEVICES AND PROGRAMMING SHOWN ON THESE CONTROL DRAWINGS SHALL BE PROVIDED BY THE TCC UNLESS SPECIFICALLY NOTED OTHERWISE.
4. ALL ACTUATORS SHALL BE OF THE ELECTRICAL TYPE FOR THIS PROJECT UNLESS AN ACTUATOR IS SPECIFICALLY INDICATED ON THE DRAWINGS OR SPECIFICATIONS TO BE PNEUMATIC.
5. ALL MODULATING DAMPER AND VALVE ACTUATORS SHOWN WITH POSITION FEEDBACK SHALL HAVE THE VALVE POSITION DISPLAYED ON GRAPHICAL SCREEN ADJACENT TO THE DAMPER/VALVE COMMAND SIGNAL. DISPLAYED VALVE POSITION SHALL BE FROM THE FEEDBACK DEVICE/CIRCUIT (OUTPUT SIGNAL FROM THE FMCS TO THE ACTUATOR IS NOT ACCEPTABLE)
6. MODULATING SIGNALS SHALL BE DISPAYED AS % OPEN (SIGNALS DISPLAYED AS % CLOSED ARE NOT ACCEPTABLE).
7. PRESSURE TRANSMITTERS WHOSE SIGNAL IS UTILIZED FOR MAINTAINING DUCT STATIC PRESSURE SHALL BE WIRED DIRECTLY TO THE CONTROLLER WHICH MODULATES FAN SPEED. SIGNAL SHALL BE COMPLETELY INDEPENDENT OF THE FMCS NETWORK.
8. ALL CONTROL COMPONENTS SUCH AS RELAYS, SWITCHES, DDC CONTROLLERS, ETC. SHALL BE MOUNTED IN STEEL ENCLOSURES WITH STEEL MOUNTING BACKPLATES PER SPECIFICATION 15952.
9. EACH CONTROL PANEL SHALL HAVE A LAMINATED COPY OF THE APPLICABLE SEQUENCE OF OPERATION AND CONTROL DIAGRAM INDICATING THE POINTS, COMPONENTS AND OPERATION OF EQUIPMENT ASSOCIATED WITH EACH PANEL. REFER TO SECTION 15952 FOR ADDITIONAL REQUIREMENTS.
10. TCC SHALL EXTEND CONTROL SIGNAL FROM ADDRESSABLE RELAY DEVICE SERVING EACH ROOF TOP UNIT. REFER TO ELECTRICAL DRAWINGS FOR LOCATIONS. TCC SHALL EXTEND AND TERMINATE WIRING AS REQUIRED FOR EQUIPMENT SHUTDOWN.
11. TCC SHALL PROVIDE CONDUIT RUNS AS REQUIRED FOR OUTDOOR EQUIPMENT AND FOR EQUIPMENT INSTALLED REMOTELY FROM THE MAIN BUILDING THAT IS BEING MONITORED OR CONTROLLED BY THE FMCS.
12. ELEMENT LENGTHS FOR BOTH MIXED AIR TEMP SENSORS AND LOW LIMIT TEMP SWITCHES SHALL BE MINIMUM 1 LINEAR FOOT PER SQUARE FOOT OF COIL SURFACE AREA. PROVIDE MULTIPLE SENSORS AND SWITCHES AS NEEDED TO ACHIEVE REQUIRED ELEMENT LENGTHS. LOCATE RESET SWITCHES MAX. 6'-6" ABOVE ADJACENT STANDING SURFACE (I.E. ROOF, PLATFORM OR FLOOR) SO THE RESET SWITCH CAN BE CYCLED WITHOUT THE NEED FOR A LADDER.
13. CONTROL DIAGRAMS ARE SCHEMATIC IN NATURE AND DO NOT SHOW ALL REQUIRED CONTROL DEVICES AND COMPONENTS. REFER TO FLOOR PLANS, FLOW DIAGRAMS AND DETAILS FOR ADDITIONAL CONTROL DEVICES, COMPONENTS AND REQUIREMENTS NOT SHOWN ON THESE CONTROL DRAWINGS.
14. TCC SHALL PROVIDE ALL CONTROL COMPONENTS AND ACCESSORIES AS REQUIRED FOR EQUIPMENT TO BE CONTROLLED AS DESCRIBED IN THE SEQUENCE OF OPERATION REGARDLESS OF WHETHER ALL CONTROL COMPONENTS OR POINTS ARE SHOWN IN THE ASSOCIATED CONTROL DIAGRAM.

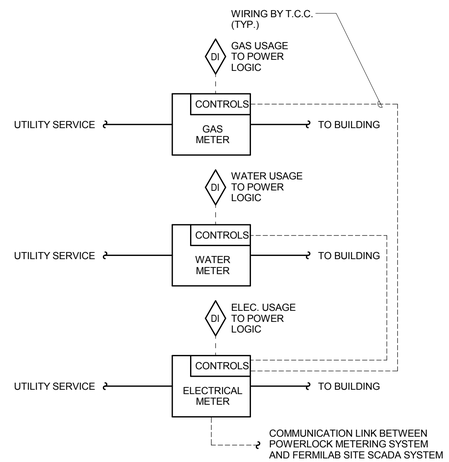

SEQUENCE OF OPERATION:

GENERAL:
THE UTILITIES SHALL BE MONITORED BY INTEGRATED UTILITY INFORMATION SYSTEM WHICH PROVIDES MONITORING AND MANAGEMENT OF ELECTRIC, WATER, AND GAS UTILITIES FROM ONE HARDWARE AND SOFTWARE SYSTEM. UTILITY INFORMATION SYSTEM SHALL BE SCHNEIDER ELECTRIC POWERLOGIC. POWERLOGIC METERING SYSTEM SHALL BE CONNECTED BY T.C.C. TO NETWORK SWITCH TO BE MONITORED BY FERMILAB SITE SCADA SYSTEM. COORDINATE SYSTEM REQUIREMENTS WITH FERMILAB.

UTILITY METERING CONTROL:

- GAS METERING:
  THE TCC SHALL CONNECT THE POWERLOGIC ELECTRICAL METER TO THE GAS METER TO PROVIDE GAS CONSUMPTION INFORMATION.
- WATER METERING:
  THE TCC SHALL CONNECT THE POWERLOGIC ELECTRICAL METER TO THE WATER METER TO PROVIDE WATER USAGE INFORMATION.
- ELECTRIC METERING:
  THE TCC SHALL CONNECT THE POWERLOGIC ELECTRICAL METER TO THE SITE SCADA SYSTEM FOR ELECTRICAL USAGE INFORMATION.

UTILITY METERING REPORT GENERATION:

- SITE SCADA SYSTEM SHALL MONITOR THE FOLLOWING POINTS ON DAILY (ADJ.) INTERVALS WITHIN A SINGLE TREND. THE TREND SHALL RUN FOREVER (ADJ.). IF INFORMATION STORAGE SPACE CAPACITY IS REACHED THE NEWEST VALUES SHALL OVERWRITE THE OLDEST VALUES:
  - DATE
  - TIME
  - GAS USE (CU.FT.)
  - WATER USE (GALLONS)
  - ELECTRICAL USE (KWH)
- THIS INFORMATION SHALL BE ACCESSIBLE TO VIEW IN EITHER TABULAR OR GRAPHICAL FORM ON THE POWERLOGIC OPERATOR INTERFACE LOCATED IN A STANDALONE CABINET MOUNTED OUTSIDE OF ELECTRICAL SWITCHBOARD.
- ONCE PER MONTH, THE SITE SCADA SYSTEM SHALL RECORD THE LARGEST GAS USE (IN KW), WATER USE (IN LITERS), AND ELECTRICAL USE (IN KW) WHICH OCCURRED DURING THAT MONTH. THE DATE AND TIME THAT COINCIDED WITH THAT EVENT SHALL ALSO BE RECORDED. THIS INFORMATION SHALL BE STORED TO A MEMORY LOCATION ON THE SITE SCADA SYSTEM THAT IS MAINTAINED (NOT AUTOMATICALLY OVERWRITTEN).

UTILITY METERING CONTROL

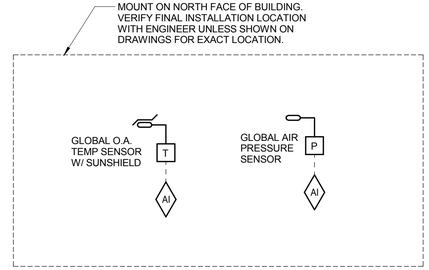

SEQUENCE OF OPERATION:
PROVIDE GLOBAL O.A. DRY-BULB TEMPERATURE & OUTSIDE AIR REFERENCE PRESSURE TRANSMITTERS.

OUTSIDE AIR PRESSURE SHALL BE INSTALLED ON ALL FOUR SIDES OF THE BUILDING AND PIPED WITH EQUAL LENGTHS OF 1/4" TUBING TO A PIPE MANIFOLD. PIPING BY TCC. LOCATIONS TO BE DETERMINED PER MANUFACTURER'S RECOMMENDATIONS AND ENGINEER'S APPROVAL. TCC SHALL PRIME AND PAINT THE DEVICE ENCLOSURE.

GLOBAL SENSORS SHALL CONTINUOUSLY UPDATE FMCS FOR USE IN CONTROLLING MECHANICAL EQUIPMENT AS REQUIRED IN SEQUENCES OF OPERATION.

GLOBAL REFERENCE POINTS

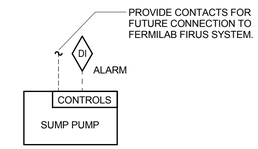

ALARMS, INTERLOCKS & SAFETIES:
FMCS SHALL INDICATE AN ALARM TO THE FMCS OPERATOR WORKSTATION IN THE EVENT THE FOLLOWING OCCUR:
- HIGH WATER CONDITION.
- CONTROLLER INDICATES AN ALARM CONDITION.

SUMP PUMP MONITORING

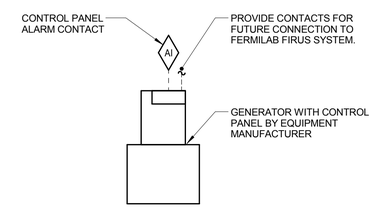

SEQUENCE OF OPERATION:
OPERATION OF GENERATOR SHALL BE CONTROLLED BY MANUFACTURER'S SUPPLIED CONTROL PANEL.

FMCS SHALL MONITOR THE ALARM CONTACT PROVIDED WITH EACH CONTROL. AN ALARM AT ANY CONTROL PANEL SHALL ALSO BE INDICATED AT THE OPERATOR WORKSTATION.

GENERATOR MONITORING CONTROL

REV.	DATE	
5	03/02/15	ISSUED FOR 90% REVIEW
4	02/23/15	ISSUED FOR 90% COST ESTIMATE
3	01/26/15	ISSUED FOR 60% REVIEW
2	01/16/15	ISSUED FOR PRICING
1	12/23/14	SCHEMATIC DESIGN

REVISIONS

KJWW ENGINEERING CONSULTANTS
The FUTURE. Built SMARTER.®
1100 WARRENVILLE ROAD, SUITE 400W
NAPERVILLE, ILLINOIS 60563
630.527.2320 FAX: 630.527.2321
www.kjww.com
PROJECT #:
Illinois Design Firm Registration #184-000973

KJWW ENGINEERING RESERVES PROPRIETARY RIGHTS, INCLUDING COPYRIGHTS, TO THIS DRAWING AND THE DATA SHOWN THEREON. SAID DRAWING AND/OR DATA ARE THE EXCLUSIVE PROPERTY OF KJWW ENGINEERING AND SHALL NOT BE USED OR REPRODUCED FOR ANY OTHER PROJECT WITHOUT THE EXPRESS WRITTEN APPROVAL AND PARTICIPATION OF KJWW ENGINEERING. © 2015 KJWW, P.C.

REFERENCE SCALE IN INCHES
0 1 2 3

FERMI LAB		DATE
DESIGNED	P. MUELLER	3/2/2015
DRAWN	D. WILKINS	3/2/2015
CHECKED		
APPROVED		
SUBMITTED		

SCALE:

NOT FOR CONSTRUCTION

FERMI NATIONAL ACCELERATOR LABORATORY
UNITED STATES DEPARTMENT OF ENERGY

SBN FAR DETECTOR BUILDING
MECHANICAL CONTROL DIAGRAMS

DRAWING NO. 6-7-93 M-10 REV. 5

02 MAR. 2015

C:\Revit Local Files\MEP15_14.0872.00 - Fermi Lab - Far Detector_CENTRAL_wellsma.rvt

3/2/2015 5:19:55 PM

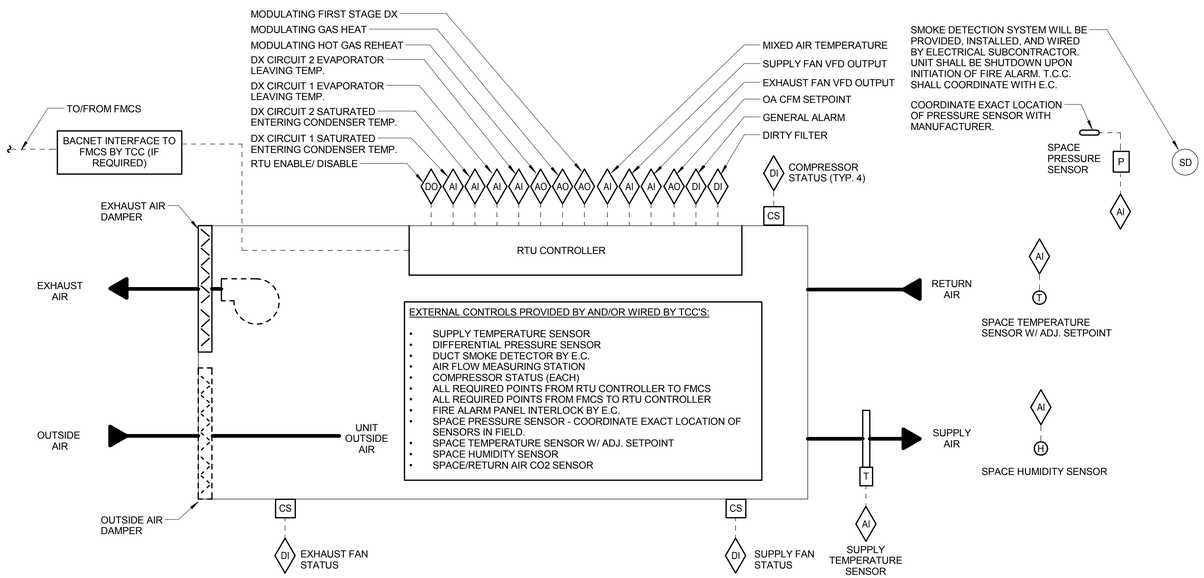

AHU REPORT GENERATION:
DDC FMCS SHALL MONITOR THE FOLLOWING POINTS ON 10 MINUTE (ADJ.) INTERVALS WITHIN A SINGLE TREND. THE TREND SHALL RUN FOR A 14-DAY (ADJ.) DURATION AT WHICH POINT THE NEWEST VALUES SHALL AUTOMATICALLY OVERWRITE THE OLDEST VALUES:

- DATE
- TIME
- GLOBAL OUTSIDE AIR TEMP [°F]
- SUPPLY AIR TEMP (SAT) [°F]
- ROOM AIR TEMP SETPOINT [°F]
- MIXED AIR TEMP [°F]
- SUPPLY FAN VFD OUTPUT [% FULL SPEED]
- EXHAUST FAN VFD OUTPUT [% FULL SPEED]
- OUTSIDE AIR DAMPER POSITION [% OPEN]
- RETURN AIR DAMPER POSITION [% OPEN]
- RELIEF AIR DAMPER POSITION [% OPEN]

THIS INFORMATION SHALL BE ACCESSIBLE TO VIEW IN EITHER TABULAR OR GRAPHICAL FORM ON THE FMCS OPERATOR WORKSTATION.

ROOFTOP UNIT REPORT GENERATION

PACKAGE ROOFTOP UNIT SYSTEM DESCRIPTION:
REFER TO SECTION 15780 FOR A DESCRIPTION OF THE RTU AND THE CONTROLS PROVIDED BY THE RTU MANUFACTURER.

SEQUENCE OF OPERATION:
THE TCC SHALL EXTEND THE FMCS NETWORK TO THE RTU UNITARY CONTROLLER PER THE PROTOCOL SPECIFIED IN SECTION 15952. THE TCC SHALL PROVIDE ALL ADDITIONAL CONTROL COMPONENTS REQUIRED TO ACCOMPLISH THE SEQUENCE OF OPERATION LISTED BELOW.

WHEN RTU IS INDEXED TO RUN, THE FOLLOWING SHALL OCCUR:
- SUPPLY FAN SHALL BE ENABLED TO RUN.
- WHEN THE SUPPLY FAN HAS STARTED, THE EXHAUST FAN AND INTERLOCKED SPACE EXHAUST FAN SHALL START AS SHOWN IN THE FAN INTERLOCK SCHEDULE.
- COOLING/HEATING COILS SHALL MAINTAIN THE ROOM TEMPERATURE SETPOINT.
- SUPPLY FAN SHALL MODULATE TO MAINTAIN SPACE TEMPERATURE SETPOINT.
- EXHAUST FAN SHALL MODULATE TO MAINTAIN SPACE PRESSURE SETPOINT.

THE ROOFTOP UNIT SHALL BE INDEXED TO RUN CONTINUOUSLY 24 HOURS A DAY, 7 DAYS A WEEK. THE BAS SHALL BE CAPABLE OF BEING PROGRAMMED WITH AN ADJUSTABLE OCCUPANCY SCHEDULE WHICH INCLUDES START UP MODE, EXPERIMENTAL MODE, AND UNOCCUPIED MODE. STARTUP AND UNOCCUPIED MODE SHALL BE USED DURING INSTALLATION MODE ONLY AND SHALL BE COMPLETELY DISABLED WHEN BUILDING IN EXPERIMENTAL MODE.

SUPPLY FAN AND COIL OPERATION:
THE FMCS SHALL MODULATE THE SIGNAL TO THE SUPPLY FAN, DAMPERS, VARIABLE SPEED COMPRESSORS, HOT GAS REHEAT, AND HEATING COIL TO ACHIEVE A MAXIMUM ROOM TEMPERATURE SETPOINT OF 78°F (ADJ.) AND MIMIMUM ROOM TEMPERATURE SETPOINT OF 65°F BASED ON A SIGNAL FROM A WALL MOUNTED TEMPERATURE SENSOR LOCATED IN THE SPACE.
- AT FULL COOLING, THE SUPPLY FAN SHALL MODULATE TO ITS MAXIMUM COOLING CFM SPEED. THE RTU SHALL BE CONTROLLED TO MAINTAIN A 55°F (ADJ.) DISCHARGE AIR TEMPERATURE.
- ECONOMIZER SHALL BE THE FIRST STAGE OF COOLING. WHENEVER THE TEMPERATURE OF THE OUTSIDE AIR IS LESS THAN THE ECONOMIZER ENABLE SETPOINT (OUTDOOR AIR DRY BULB TEMPERATURE), THE RTU SHALL GO INTO ECONOMIZER MODE. IN ECONOMIZER MODE, THE OUTSIDE AIR DAMPER SHALL MODULATE TO MAINTAIN RTU ROOM AIR SETPOINT AND THE RTU COMPRESSORS SHALL BE DISABLED. DURING FULL ECONOMIZER MODE, THE RETURN AIR DAMPER SHALL BE 100% CLOSED AND THE OUTSIDE AIR SHALL BE 100% OPEN. IF THE ECONOMIZER SEQUENCE CANNOT MAINTAIN SETPOINT, THE DX COOLING COIL SHALL MODULATE TO MAINTAIN SETOINT AND THE UNIT SHALL REMAIN IN FULL ECONOMIZER.
- IF THE TEMPERATURE OF THE OUTSIDE AIR IS GREATER THAN THE ECONOMIZER ENABLE SETPOINT, THE OUTSIDE AIR DAMPER SHALL BE AT ITS MINIMUM POSITION. THE COMPRESSORS SHALL MODULATE TO MAINTAIN THE ROOM AIR TEMPERATURE SETPOINT.
- AS THE ROOM AIR TEMPERATURE FALLS, THE SUPPLY FAN SPEED AND COMPRESSORS SHALL MODULATE DOWN TO MAINTAIN ROOM TEMPERATURE SETPOINT.
- ON A FURTHER REDUCTION IN ROOM TEMPERATURE, THE COMPRESSORS SHALL BE DISABLED AND THE OUTSIDE AIR DAMPER SHALL BE AT ITS MINIMUM POSITION. THE GAS FURNACE SHALL MODULATE TO MAINTAIN ROOM AIR TEMPERATURE SETPOINT. THE SUPPLY FAN SHALL MODULATE ALONG WITH THE GAS FURNACE WHILE MAINTAINING AT OR ABOVE THE MINIMUM HEATING AIRFLOW AS DICTACTED BY THE MANUFACTURER. MAXIMUM HEATING DISCHARGE AIR TEMPERATURE SHALL BE 95°F (ADJ.).

THE TCC SHALL COORDINATE ALL SAFETY AND INTERLOCK REQUIREMENTS WITH THE RTU MANUFACTURER. AT NO TIME SHALL THE MOTOR BE ALLOWED TO RUN BELOW THE MOTOR MANUFACTURER'S MINIMUM RECOMMENDED SPEED.

DEHUMIDIFICATION MODE:
IF THE SPACE RELATIVE HUMIDITY INCREASES HIGHER THAN 55% (ADJ.), THE RTU SHALL GO INTO DEHUMIDIFICATION MODE. IN DEHUMIDIFICATION MODE, THE COOLING COIL SHALL OPERATE TO MAINTAIN A DISCHARGE AIR TEMPERATURE OF 55°F (ADJ.). IMMEDIATELY DOWNSTREAM OF THE COOLING COIL. THE HOT GAS REHEAT COIL SHALL HEAT THE 55°F (ADJ.) AIR FROM THE COOLING COIL TO THE PROPER DISCHARGE AIR TEMPERATURE REQUIRED TO MAINTAIN THE ROOM TEMPERATURE SETPOINT. ONCE THE SPACE RELATIVE HUMIDITY DROPS BELOW 50% (ADJ.), THE UNIT SHALL REVERT BACK TO SPACE TEMPERATURE CONTROL MODE.

EXHAUST FAN CONTROL:
EXHAUST FAN SHALL BE INDEXED TO RUN WHENEVER THE UNIT IS IN OCCUPIED MODE TO MAINTAIN BUILDING PRESSURE. THE TCC SHALL PROVIDE AND INSTALL 1/4" TUBING FROM THE RTU DIFFERENTIAL PRESSURE TRANSMITTER TO THE GRADE LEVEL SPACE. TUBING SHALL BE POLY TUBING IN CONDUIT OR HARD DRAWN COPPER. LOCATION TO BE DETERMINED PER MANUFACTURER'S RECOMMENDATIONS AND THE ARCHITECT/ENGINEER'S APPROVAL. THE BAS SHALL MODULATE THE SIGNAL TO THE EXHAUST FAN VFD AS REQUIRED TO MAINTAIN THE ENCLOSURE LEVEL PRESSURE OF +0.05" W.C. (ADJ.) RELATIVE TO THE OUTDOORS.

VENTILATION CONTROL:
WHENEVER THE UNIT IS IN OCCUPIED MODE THE OUTSIDE AIR DAMPER SHALL BE OPEN TO MAINTAIN MINIMUM OUTSIDE AIR CFM BASED ON MINIMUM OUTSIDE AIR DAMPER POSITION.

ALARMS, INTERLOCKS AND SAFETIES:
THE FOLLOWING SAFETIES SHALL BE INSTALLED BY THE TCC IN THE FIELD.
- FIRE ALARM RELAY BY E.C.

SEND AN ALARM TO THE FMCS FOR THE FOLLOWING:
- SUPPLY FAN FAILURE (WHEN STATUS DOES NOT MATCH COMMANDED STATE AFTER 60 SECONDS)
- EXHAUST FAN FAILURE (WHEN STATUS DOES NOT MATCH COMMANDED STATE AFTER 60 SECONDS)
- DIRTY FILTERS (WHEN FILTER PRESSURE DROP EXCEEDS 0.6" W.C. (ADJ.)
- IF DISCHARGE AIR TEMPERATURE IS MORE THAN 10°F (ADJ.) ABOVE OR BELOW SETPOINT.
- EMERGENCY STOP

WHENEVER RTU IS SHUTDOWN THE FMCS SHALL COMMAND THE FOLLOWING TO OCCUR:
- SUPPLY FAN AND RELIEF FAN SHALL STOP.
- OUTSIDE AIR AND EXHAUST AIR DAMPERS SHALL FULLY CLOSE. THE RETURN AIR DAMPER SHALL FULLY OPEN.
- HEATING AND COOLING SHALL BE DISABLED.

MORNING START-UP OPERATION:
- THE FMCS SHALL MEASURE THE SPACE TEMPERATURES AND OUTSIDE AIR TEMPERATURE TO DETERMINE THE MINIMUM RUNTIME TO WARM THE SPACES TO THEIR SETPOINT.
- WHEN THE COMPUTED START TIME IS REACHED THE FMCS SHALL ENABLE THE RTU.
- RESET SPACE TEMP SETPOINT TO OCCUPIED SPACE TEMPERATURE SETPOINT.
- THE RETURN AIR DAMPER SHALL BE OPEN AND THE OUTSIDE AIR AND RELIEF AIR DAMPERS SHALL REMAIN CLOSED

UN-OCCUPIED MODE OPERATION:
- RTU SHALL BE DISABLED. SUPPLY FAN AND EXHAUST FAN SHALL BE ENABLED TO OPERATE INTERMITTENTLY WHEN ANY SPACE TEMPERATURE DROPS BELOW 55°F (ADJ.) OR EXCEEDS 85°F (ADJ.).
- OUTSIDE AIR AND EXHAUST AIR DAMPER SHALL REMAIN CLOSED. RETURN AIR DAMPER SHALL BE 100% OPEN. ECONOMIZER MODE SHALL TAKE PRECEDENCE OVER THE PREVIOUS TWO SENTENCES.

GRAPHICAL DISPLAY:
DISPLAY THE GLOBAL OUTSIDE AIR TEMPERATURE ON RTU GRAPHIC PAGE.

FAN INTERLOCK SCHEDULE		
SYSTEM	INTERLOCKED EXHAUST FANS	REMARKS
RTU-1	EF-3	NOTE 1

NOTES:
1. INTERLOCK EXHAUST FAN OPERATION THROUGH THE FMCS WITH RESPECTIVE RTU IN ACCORDANCE WITH RTU SEQUENCE OF OPERATION.

ROOFTOP UNIT CONTROL WITH EXHAUST FAN - RTU-1

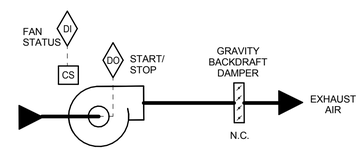

SEQUENCE OF OPERATION:
EXHAUST FAN SHALL BE INTERLOCKED TO RUN CONTINUOUSLY WHEN RTU-1 IS OPERATING.

GRAVITY BACKDRAFT DAMPER SHALL FULLY OPEN WHEN FAN IS ENERGIZED. WHEN FAN IS DE-ENERGIZED, GRAVITY BACKDRAFT DAMPER SHALL FULLY CLOSE.

ALARMS, INTERLOCKS AND SAFETIES:
AN ALARM SHALL BE GENERATED AT THE FMCS OPERATOR WORKSTATION IN THE EVENT THE FMCS COMMANDS THE EXHAUST FAN TO OPERATE AND THE CURRENT SENSING RELAY DETECTS INSUFFICIENT CURRENT DRAW.

EXHAUST FAN CONTROL - EF-3

REV.	DATE	
5	03/02/15	ISSUED FOR 90% REVIEW
4	02/23/15	ISSUED FOR 90% COST ESTIMATE
3	01/26/15	ISSUED FOR 60% REVIEW
2	01/16/15	ISSUED FOR PRICING
1	12/23/14	SCHEMATIC DESIGN

REVISIONS

KJWW ENGINEERING CONSULTANTS
The FUTURE. Built SMARTER.®
1100 WARRENVILLE ROAD, SUITE 400W
NAPERVILLE, ILLINOIS 60563
630.527.2320 FAX: 630.527.2321
www.kjww.com
PROJECT #:
Illinois Design Firm Registration #184-000973

KJWW ENGINEERING RESERVES PROPRIETARY RIGHTS, INCLUDING COPYRIGHTS, TO THIS DRAWING AND THE DATA SHOWN THEREON. SAID DRAWING AND/OR DATA ARE THE EXCLUSIVE PROPERTY OF KJWW ENGINEERING AND SHALL NOT BE USED OR REPRODUCED FOR ANY OTHER PROJECT WITHOUT THE EXPRESS WRITTEN APPROVAL AND PARTICIPATION OF KJWW ENGINEERING. © 2015 KJWW, P.C.

REFERENCE SCALE IN INCHES
0 1 2 3

FERMI LAB		DATE
DESIGNED	P. MUELLER	3/2/2015
DRAWN	D. WILKINS	3/2/2015
CHECKED		
APPROVED		
SUBMITTED		

SCALE:

NOT FOR CONSTRUCTION

FERMI NATIONAL ACCELERATOR LABORATORY
UNITED STATES DEPARTMENT OF ENERGY

SBN FAR DETECTOR BUILDING
MECHANICAL CONTROL DIAGRAMS

DRAWING NO. 6-7-93 M-11 REV. 5

02 MAR. 2015

C:\Revit Local Files\MEP15_14.0872.00 - Fermi Lab - Far Detector_CENTRAL_wellsma.rvt

3/2/2015 5:19:56 PM

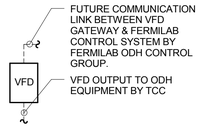

SEQUENCE OF OPERATION:
SUBCONTRACTOR SHALL PROVIDE AND INSTALL VFD FOR ODH EQUIPMENT AS REQUIRED FOR EQUIPMENT STARTUP, TESTING, AND BALANCING. VFDS FOR ODH EQUIPMENT SHALL NOT BE MONITORED OR CONTROLLED BY THE BAS. DRIVE SHALL BE EQUIPPED BY THE VFD MANUFACTURER WITH A COMMUNICATION CARD THAT IS COMPATIBLE WITH THE FUTURE FERMILAB ODH CONTROL SYSTEM PANEL POINTS AND FUNCTIONS AS DESCRIBED BELOW.

FERMILAB ODH CONTROL GROUP SHALL PROVIDE AND INSTALL FUTURE ODH CONTROL SYSTEM AND ASSOCIATED WIRING WHICH WILL PROVIDE 24V DC CONTROL SIGNAL FOR ODH VFD CONTROL/OPERATION AS DESCRIBED BELOW AND IN THE SEQUENCE OF OPERATION FOR ODH EQUIPMENT. FERMILAB ODH CONTROL GROUP SHALL PROVIDE FUTURE COMMUNICATIONS WIRING AND PROGRAMMING AS REQUIRED FOR THE FUTURE FERMILAB ODH CONTROL SYSTEM TO COMMUNICATE WITH EACH VFD AS DESCRIBED BELOW.

THE FOLLOWING ODH VFD CONTROL PANEL POINTS (TO INCLUDE BUT NOT LIMITED TO) SHALL BE CONTROLLED BY THE FUTURE FERMILAB ODH CONTROL SYSTEM:
- SYSTEM STATUS: [ENABLE/DISABLE]
- SPEED SET ADJUSTMENT: [%]
- CURRENT LIMIT: [AMPS]

THE FOLLOWING ODH VFD CONTROL PANEL POINTS (TO INCLUDE BUT NOT LIMITED TO) SHALL BE MONITORED BY THE FUTURE FERMILAB ODH CONTROL SYSTEM:
- SYSTEM STATUS: [DISABLED/MANUAL OPERATION/REMOTE OPERATION/AUTO/FAULT]
- INPUT SPEED: [0 - 100%]
- OUTPUT SPEED: [0 - 100%]
- CURRENT: [AMPS]
- POWER: [kW]
- DRIVE TEMPERATURE: [°F]
- RUN HOURS: [NUMERICAL]
- DIAGNOSTIC AND FAULT CODES: [NUMERICAL]
- BYPASS OPERATION: [ENABLED/DISABLED]

TCC SHALL PROVIDE A CURRENT SENSING RELAY ON ANY VFD EQUIPPED WITH A BYPASS WHERE THE VFD STATUS OUTPUT DOES INDICATE THE MOTOR IS RUNNING WHEN THE VFD IS OPERATING IN BYPASS MODE.

ALARMS, INTERLOCKS & SAFETIES:
ALL ALARMS SHALL BE DETERMINED AND WIRED TO FUTURE ODH CONTROL SYSTEM BY FERMILAB.

TCC SHALL PROGRAM VFD TO ENSURE MOTOR RPM DOES NOT DROP BELOW MINIMUM REQUIRED BY MOTOR MANUFACTURER.

ODH VARIABLE FREQUENCY DRIVE CONTROL

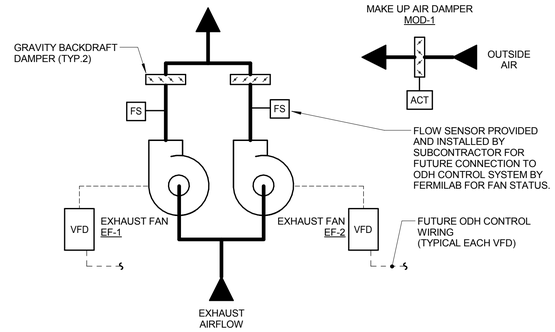

ODH EXHAUST FAN (EF-1 & EF-2) SEQUENCE OF OPERATION:
SUBCONTRACTOR SHALL PROVIDE AND INSTALL ALL EQUIPMENT AND ACCESSORIES SHOWN REQUIRED TO START-UP AND TEST & BALANCE ODH EXHAUST FAN SYSTEM. EQUIPMENT SHOWN IN ODH EXHAUST FAN CONTROL DIAGRAM SHALL NOT BE MONITORED OR CONTROLLED BY BAS.

FERMILAB ODH CONTROL GROUP SHALL PROVIDE AND INSTALL FUTURE ODH CONTROL SYSTEM WHICH WILL PROVIDE 24V DC CONTROL SIGNAL FOR ODH EXHAUST FAN CONTROL/OPERATION AS DESCRIBED BELOW. FUTURE ODH CONTROL SYSTEM INCLUDES ALL RELAYS, INTERFACES, SENSORS, PANELS, AND ASSOCIATED WIRING TO CONTROL OPERATION OF EQUIPMENT ALREADY PROVIDED AND INSTALLED BY SUBCONTRACTOR.

EACH ODH EXHAUST FAN SHALL BE SIGNALLED TO RUN CONTINUOUSLY BY A 24V DC SIGNAL FROM FUTURE FERMILAB ODH CONTROLS. WHEN EITHER FAN IS ENERGIZED, MAKE-UP AIR DAMPER (MOD-1) SHALL FULLY OPEN. WHEN BOTH FANS ARE DE-ENERGIZED, MAKE-UP AIR DAMPER (MOD-1) SHALL FULLY CLOSE. MOD-1 SHALL BE SPRING LOADED TO FAIL OPEN.

ALARMS, INTERLOCKS AND SAFETIES:
ALL ALARMS SHALL BE WIRED TO FUTURE ODH CONTROL SYSTEM BY FERMILAB.
TCC SHALL HARD-WIRE AND INTERLOCK OPERATION OF MAKE-UP AIR DAMPER (MOD-1) WITH RELAYS TO OPERATE AS DESCRIBED ABOVE WITHOUT THE USE OF SOFTWARE.

ODH EXHAUST FAN CONTROL - EF-1&2

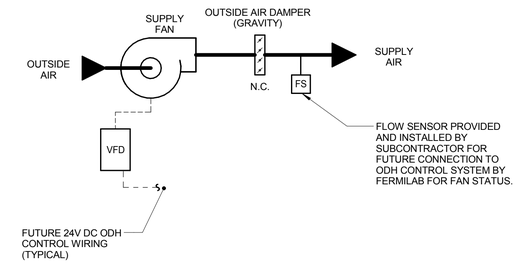

ODH STAIRWELL PRESSURIZATION FAN (F-1 & F-2) SEQUENCE OF OPERATION:
SUBCONTRACTOR SHALL PROVIDE AND INSTALL ALL EQUIPMENT AND ACCESSORIES SHOWN REQUIRED TO START-UP AND TEST & BALANCE ODH STAIRWELL PRESSURIZATION FAN SYSTEM. EQUIPMENT SHOWN IN CONTROL DIAGRAM SHALL NOT BE MONITORED OR CONTROLLED BY BAS.

FERMILAB ODH CONTROL GROUP SHALL PROVIDE AND INSTALL FUTURE ODH CONTROL SYSTEM WHICH WILL PROVIDE 24V DC CONTROL SIGNAL FOR ODH STAIRWELL PRESSURIZATION FAN CONTROL/OPERATION AS DESCRIBED BELOW. FUTURE ODH CONTROL SYSTEM INCLUDES ALL RELAYS, INTERFACES, SENSORS, PANELS, AND ASSOCIATED WIRING TO CONTROL OPERATION OF EQUIPMENT ALREADY PROVIDED AND INSTALLED BY SUBCONTRACTOR.

EACH ODH FAN SHALL BE SIGNALLED TO RUN BY A 24V DC SIGNAL BY FUTURE FERMILAB ODH CONTROLS.

ALARMS, INTERLOCKS AND SAFETIES:
ALL ALARMS SHALL BE WIRED TO FUTURE ODH CONTROL SYSTEM BY FERMILAB.

ODH STAIRWELL PRESSURIZATION FAN CONTROL - F-1&2

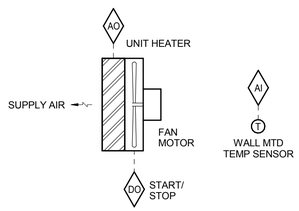

SEQUENCE OF OPERATION:

WHEN THE OUTDOOR AIR TEMPERATURE IS ABOVE 40°F (ADJ.), TEMPERATURE SENSOR SHALL ENERGIZE FAN AND MODULATE THE ELECTRIC COIL TO MAINTAIN A SPACE TEMPERATURE OF 65°F (ADJ.). WHEN SPACE TEMPERATURE IS SATISFIED THE FAN SHALL TURN OFF.

WHEN THE OUTDOOR AIR TEMPERATURE IS BELOW 40°F (ADJ.), TEMPERATURE SENSOR SHALL MODULATE THE ELECTRIC COIL TO MAINTAIN A SPACE TEMPERATURE OF 65°F (ADJ.) AND THE UNIT FAN SHALL RUN CONTINUOUSLY.

ALARMS, INTERLOCKS & SAFETIES:

SEND AN ALARM TO THE FMCS OPERATOR INTERFACE IF SPACE TEMPERATURE FALLS 10°F (ADJ.) BELOW SETPOINT.

UNIT HEATER CONTROL - ELECTRIC

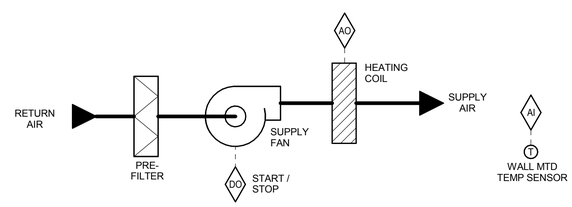

SEQUENCE OF OPERATION:

THE CABINET HEATER SHALL BE FURNISHED WITH A UNIT MOUNTED FAN SPEED SELECTOR SWITCH (OFF-HIGH-MED-LOW). THE UNIT SHALL MAINTAIN A SPACE TEMPERATURE OF 65°F (ADJ.).

WHEN THE OUTDOOR AIR TEMPERATURE IS ABOVE 40°F (ADJ.), THE DDC CONTROLLER SHALL START THE FAN AND ENERGIZE THE ELECTRIC COIL. IF THE COIL TURNS OFF THEN THE FAN SHALL STOP.

WHEN THE OUTDOOR AIR TEMPERATURE IS BELOW 40°F (ADJ.), THE DDC CONTROLLER SHALL ENERGIZE THE ELECTRIC COIL TO MAINTAIN A SPACE TEMPERATURE OF 65°F (ADJ.) AND THE UNIT FAN SHALL RUN CONTINUOUSLY.

ALARMS, INTERLOCKS & SAFETIES:

- SEND AN ALARM TO THE FMCS OPERATOR INTERFACE IF SPACE TEMPERATURE FALLS 10°F (ADJ.) BELOW SETPOINT.

CABINET HEATER CONTROL - ELECTRIC

REV.	DATE	
5	03/02/15	ISSUED FOR 90% REVIEW
4	02/23/15	ISSUED FOR 90% COST ESTIMATE
3	01/26/15	ISSUED FOR 60% REVIEW
2	01/16/15	ISSUED FOR PRICING
1	12/23/14	SCHEMATIC DESIGN

REVISIONS

KJWW ENGINEERING CONSULTANTS
The FUTURE Built SMARTER.®
1100 WARRENVILLE ROAD, SUITE 400W
NAPERVILLE, ILLINOIS 60563
630.527.2320 FAX: 630.527.2321
www.kjww.com
PROJECT #:
Illinois Design Firm Registration #184-000973

KJWW ENGINEERING RESERVES PROPRIETARY RIGHTS, INCLUDING COPYRIGHTS, TO THIS DRAWING AND THE DATA SHOWN THEREON. SAID DRAWING AND/OR DATA ARE THE EXCLUSIVE PROPERTY OF KJWW ENGINEERING AND SHALL NOT BE USED OR REPRODUCED FOR ANY OTHER PROJECT WITHOUT THE EXPRESS WRITTEN APPROVAL AND PARTICIPATION OF KJWW ENGINEERING. © 2015 KJWW, P.C.

REFERENCE SCALE IN INCHES
0 1 2 3

FERMI LAB		DATE
DESIGNED	P. MUELLER	3/2/2015
DRAWN	D. WILKINS	3/2/2015
CHECKED		
APPROVED		
SUBMITTED		

SCALE:

NOT FOR CONSTRUCTION

FERMI NATIONAL ACCELERATOR LABORATORY
UNITED STATES DEPARTMENT OF ENERGY

SBN FAR DETECTOR BUILDING
MECHANICAL CONTROL DIAGRAMS

DRAWING NO. 6-7-93 M-12 REV. 5

02 MAR. 2015

C:\Revit Local Files\MEP15_14.0872.00 - Fermi Lab - Far Detector_CENTRAL_wellsma.rvt

3/2/2015 5:19:56 PM

CONTACT PERSONS

DESCRIPTION:	PERSON:
PROJECT MANAGER	JEFF OKE
MECHANICAL ENGINEER	PAUL MUELLER

GENERAL PLUMBING NOTES:

1. DRAWINGS SHOWING LOCATIONS OF EQUIPMENT, DUCTWORK, PIPING, ETC. ARE DIAGRAMMATIC AND MAY NOT ALWAYS REFLECT ACTUAL INSTALLATION CONDITIONS. DRAWINGS SHOW THE GENERAL ARRANGEMENT OF ALL DUCTWORK, PIPING, EQUIPMENT, ETC., AND MAY NOT INCLUDE ALL OFFSETS AND FITTINGS REQUIRED FOR COMPLETE INSTALLATION. THE DRAWINGS SHALL BE FOLLOWED AS CLOSELY AS ACTUAL BUILDING CONSTRUCTION AND THE WORK OF OTHERS WILL PERMIT.
2. DO NOT SCALE DRAWINGS. VERIFY ALL DIMENSIONS AND CLEARANCES FROM ARCHITECTURAL, STRUCTURAL, SUBMITTALS, AND OTHER APPROPRIATE DRAWINGS OR PHYSICALLY AT SITE. READ ALL SPECIFICATIONS. REVIEW ALL DRAWINGS, INCLUDING THOSE OF OTHER TRADES.
3. LAYOUT AND COORDINATE ALL WORK WITH ALL OTHER TRADES PRIOR TO INSTALLATION TO PROVIDE CLEARANCES REQUIRED FOR OPERATION, MAINTENANCE, CODE COMPLIANCE, AND TO VERIFY NON-INTERFERENCE WITH OTHER WORK. DO NOT FABRICATE PRIOR TO VERIFICATION OF NECESSARY CLEARANCES FOR ALL TRADES. BRING ANY INTERFERENCES OR CONFLICTS TO THE ATTENTION OF THE FERMILAB BEFORE PROCEEDING WITH ANY FABRICATION OR EQUIPMENT ORDERS.
4. SUBCONTRACTOR IS RESPONSIBLE FOR REVIEW OF SPACE REQUIREMENTS OF EQUIPMENT SPECIFIED OR SUBSTITUTED AND MAKING REASONABLE ACCOMMODATIONS IN LAYOUT AND POSITIONING TO PROVIDE PROPER ACCESS.
5. ANY CHANGES THAT ARE REQUIRED TO ELIMINATE CONFLICTS AND RESULT FROM A FAILURE TO COORDINATE SHALL BE MADE BY THE SUBCONTRACTOR WITHOUT ADDITIONAL COST OR EXPENSE TO THE FERMILAB.
6. CAULK ALL PIPE PENETRATIONS OF FULL HEIGHT NON FIRE RATED WALLS, PARTITIONS, FLOORS AND ROOF ASSEMBLIES. THIS IS ESSENTIAL TO PREVENT NOISE TRANSMISSION FROM ONE ROOM TO ANOTHER AND TO PROVIDE THE DESIRED NC LEVELS WITHIN THE ROOMS.
7. SUBCONTRACTOR IS RESPONSIBLE FOR ALL COST ASSOCIATED WITH ELECTRICAL CHANGES REQUIRED FOR EQUIPMENT DIFFERENT THAN THE BASIS OF DESIGN.
8. REFER TO ARCHITECTURAL REFLECTED CEILING PLAN FOR EXACT LOCATIONS OF ALL CEILING MOUNTED DEVICES.

PLUMBING SYMBOLS LIST

SYMBOL:	DESCRIPTION:
	EXISTING TO REMAIN
	EXISTING TO BE REMOVED
	NEW
	NEW CONNECTION
DWS	DRINKING WATER SUPPLY
D	DRAIN LINE
DT	DRAIN TILE
G	NATURAL GAS
HW110	HOT WATER 110
HW140	HOT WATER - POTABLE NO. INDICATED TEMP.
ICW	INDUSTRIAL COOLING WATER
PD	PUMPED DISCHARGE
SAN	SANITARY DRAINAGE
ST	STORM DRAINAGE
V	VENT
	PIPE CAP
	PIPE DOWN
	PIPE UP OR UP/DOWN
FD	PIPE SERVING FIXTURE ON FLOOR ABOVE. (EXAMPLE: FD = FLOOR DRAIN)
	UNDERFLOOR PIPING (LONG DASHES)
	PITCH PIPE IN DIRECTION
	DIRECTION OF FLOW IN PIPE
	DIELECTRIC CONNECTION
	UNION/FLANGE
	SHUTOFF VALVE NORMALLY OPEN
	SHUTOFF VALVE NORMALLY CLOSED
	CHECK VALVE
	REDUCER - REFERENCE SPECIFICATION FOR CONCENTRIC/ECCENTRIC AND FOT/FOB
M	METER
AFF	ABOVE FINISHED FLOOR
CO	CLEANOUT
FCO	FLOOR CLEANOUT
FD	FLOOR DRAIN
HB	HOSE BIBB
I.E.	INVERT ELEVATION (FOR REFERENCE ONLY)
LAV	LAVATORY
MB	MOP BASIN
MV	MIXING VALVE
N.C.	NORMALLY CLOSED
N.O.	NORMALLY OPEN
TD	TRENCH DRAIN
VTR	VENT THROUGH ROOF
WC	WATER CLOSET
WCO	WALL CLEANOUT
YCO	YARD CLEANOUT
C.C.	CIVIL SUBCONTRACTOR
E.C.	ELECTRICAL SUBCONTRACTOR
G.C.	GENERAL SUBCONTRACTOR
M.C.	MECHANICAL SUBCONTRACTOR
P.C.	PLUMBING SUBCONTRACTOR

PLUMBING FIXTURE ROUGH-IN SCHEDULE

FIXTURE DESCRIPTION	DOMESTIC C.W. (NOTE 3)	DOMESTIC H.W. (NOTE 3)	DI WATER	SANITARY (NOTE 3)	VENT (NOTE 3)	REMARKS
LAVATORY	1/2"	1/2"	1/2"	1 1/4"	1 1/4"	NOTE 1 & 2
MOP BASIN	3/4"	3/4"	1/2"	3"	1 1/2"	-
FLOOR DRAIN	-	-	-	4"	2"	-
HOSE BIBB	3/4"	-	-	-	-	-
TRENCH DRAIN	-	-	-	4"	2"	-
WATER CLOSET	1"	-	-	4"	2"	(FLUSH VALVE)

NOTES:

1. SANITARY RISER UP IN WALL TO FIXTURE SHALL BE A MINIMUM OF 2".
2. 1/2" CW AND HW APPLIES ONLY TO THE FINAL VERTICAL RISE-DROP TO EACH FIXTURE. BRANCH PIPING TO VERTICAL RISE-DROP SHALL BE A MINIMUM OF 3/4" INCH UNLESS NOTED OTHERWISE.
3. SIZES SHOWN ARE MINIMUMS. SIZES SHOWN ON THE DRAWING THAT ARE LARGER THAN THE SIZES LISTED IN THE SCHEDULE SHALL DICTATE THE ROUGH-IN SIZE.

C:\Revit Local Files\MEP15_14.0872.00 - Fermi Lab - Far Detector_CENTRAL_wellsma.rvt

3/2/2015 5:20:16 PM

REV.	DATE	
5	03/02/15	ISSUED FOR 90% REVIEW
4	02/23/15	ISSUED FOR 90% COST ESTIMATE
3	01/26/15	ISSUED FOR 60% REVIEW
2	01/16/15	ISSUED FOR PRICING
1	12/23/14	SCHEMATIC DESIGN

REVISIONS

KJWW ENGINEERING CONSULTANTS
The FUTURE. Built SMARTER.®
1100 WARRENVILLE ROAD, SUITE 400W
NAPERVILLE, ILLINOIS 60563
630.527.2320 FAX: 630.527.2321
www.kjww.com
PROJECT #:
Illinois Design Firm Registration #184-000973

KJWW ENGINEERING RESERVES PROPRIETARY RIGHTS, INCLUDING COPYRIGHTS, TO THIS DRAWING AND THE DATA SHOWN THEREON. SAID DRAWING AND/OR DATA ARE THE EXCLUSIVE PROPERTY OF KJWW ENGINEERING AND SHALL NOT BE USED OR REPRODUCED FOR ANY OTHER PROJECT WITHOUT THE EXPRESS WRITTEN APPROVAL AND PARTICIPATION OF KJWW ENGINEERING. © 2015 KJWW, P.C.

REFERENCE SCALE IN INCHES
0 1 2 3

FERMI LAB		DATE
DESIGNED	P. MUELLER	3/2/2015
DRAWN	D. WILKINS	3/2/2015
CHECKED		
APPROVED		
SUBMITTED		

SCALE:

NOT FOR CONSTRUCTION

FERMI NATIONAL ACCELERATOR LABORATORY

UNITED STATES DEPARTMENT OF ENERGY

SBN FAR DETECTOR BUILDING

PLUMBING COVER SHEET

DRAWING NO. 6-7-93 P-1 REV. 5

02 MAR. 2015

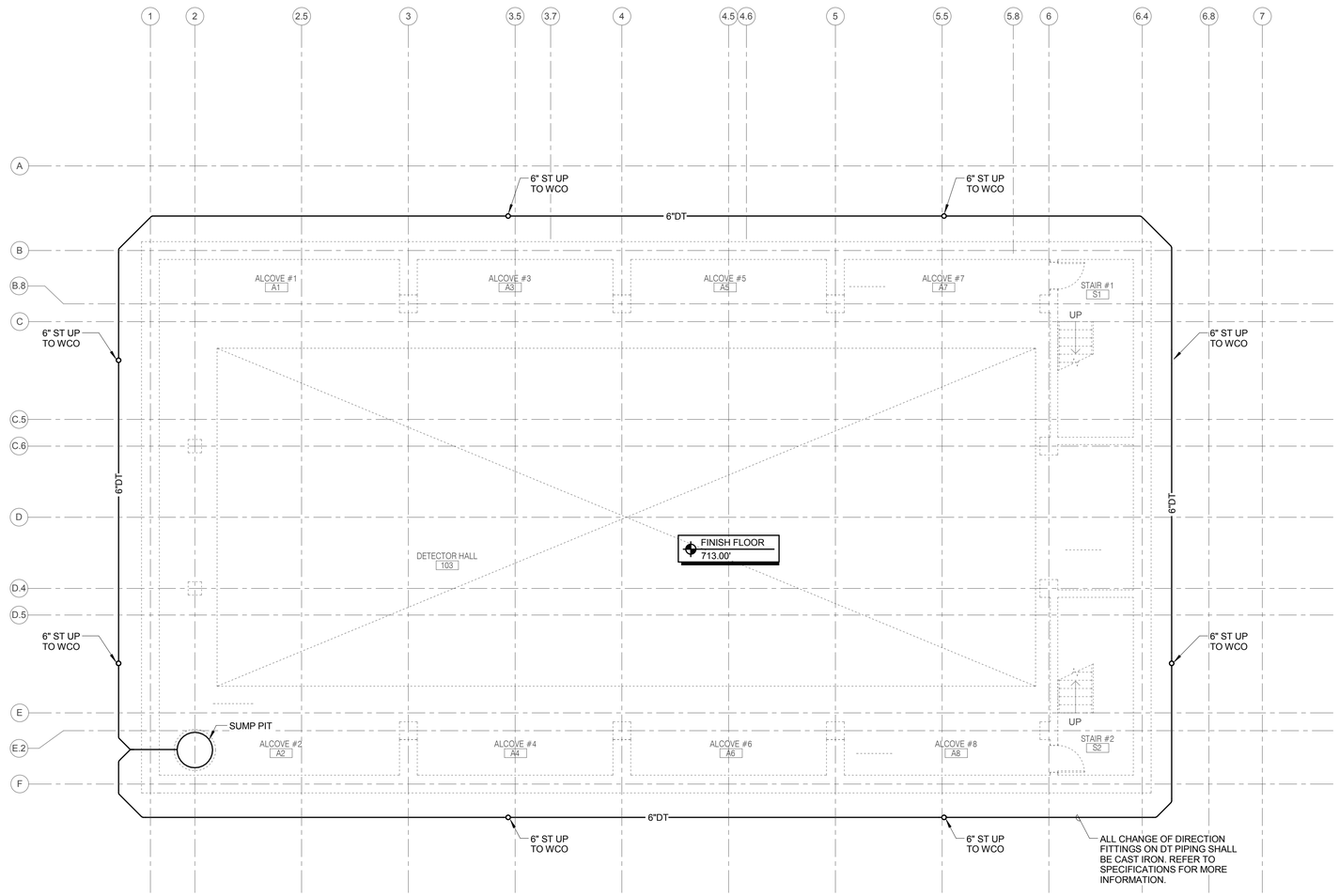

UNDER FLOOR PLUMBING PLAN

C:\Revit Local Files\MEP15_14.0872.00 - Fermi Lab - Far Detector_CENTRAL_wellsma.rvt

3/2/2015 5:20:17 PM

REV.	DATE	REVISIONS
5	03/02/15	ISSUED FOR 90% REVIEW
4	02/23/15	ISSUED FOR 90% COST ESTIMATE
3	01/26/15	ISSUED FOR 60% REVIEW
2	01/16/15	ISSUED FOR PRICING
1	12/23/14	SCHEMATIC DESIGN

KJWW ENGINEERING CONSULTANTS
The FUTURE. Built SMARTER.®
1100 WARRENVILLE ROAD, SUITE 400W
NAPERVILLE, ILLINOIS 60563
630.527.2320 FAX: 630.527.2321
www.kjww.com
PROJECT #:
Illinois Design Firm Registration #184-000973

KJWW ENGINEERING RESERVES PROPRIETARY RIGHTS, INCLUDING COPYRIGHTS, TO THIS DRAWING AND THE DATA SHOWN THEREON. SAID DRAWING AND/OR DATA ARE THE EXCLUSIVE PROPERTY OF KJWW ENGINEERING AND SHALL NOT BE USED OR REPRODUCED FOR ANY OTHER PROJECT WITHOUT THE EXPRESS WRITTEN APPROVAL AND PARTICIPATION OF KJWW ENGINEERING. © 2015 KJWW, P.C.

REFERENCE SCALE IN INCHES
0 1 2 3

	FERMI LAB	DATE
DESIGNED	P. MUELLER	3/2/2015
DRAWN	D. WILKINS	3/2/2015
CHECKED		
APPROVED		
SUBMITTED		

S W E PROJECT NORTH

SCALE:
1/8"=1'-0"
8 0 8 16
SCALE FEET

NOT FOR CONSTRUCTION

FERMI NATIONAL ACCELERATOR LABORATORY
UNITED STATES DEPARTMENT OF ENERGY

SBN FAR DETECTOR BUILDING
UNDER FLOOR PLAN - PLUMBING

DRAWING NO. 6-7-93 P-2 REV. 5

02 MAR. 2015

KEYNOTES (#)

1. ALL PLUMBING PIPING, EQUIPMENT, AND ACCESSORIES SHALL NOT CROSS OPENING IN GRADE LEVEL FLOOR ABOVE DETECTOR UNLESS OTHERWISE NOTED ON DRAWINGS. REFER TO ARCHITECTURAL DRAWINGS FOR MORE INFORMATION REGARDING THE OPENING, DETECTOR CLEARANCES, AND OVERHEAD CRANE CLEARANCES.

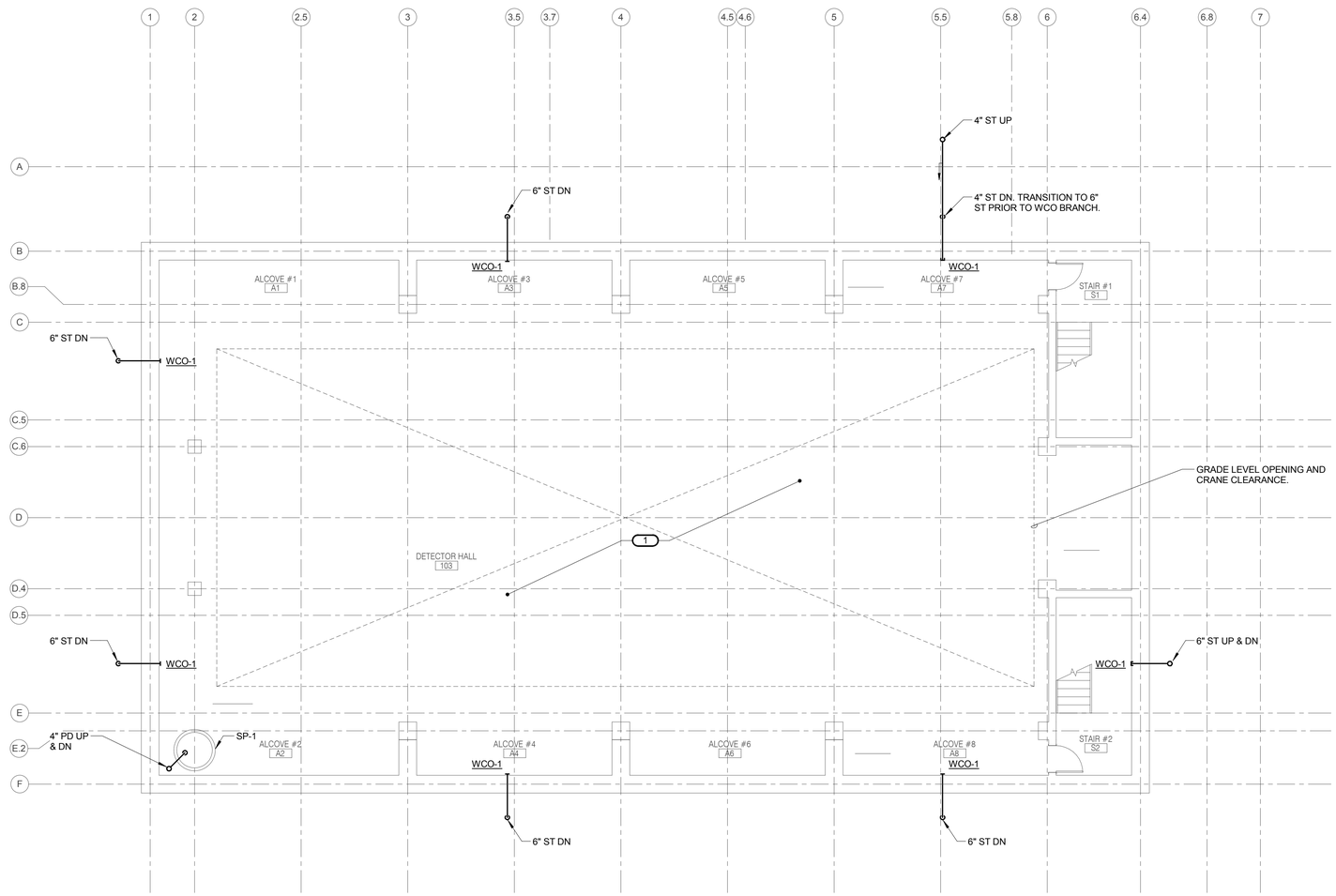

ENCLOSURE LEVEL PLUMBING PLAN

REV.	DATE	REVISIONS
5	03/02/15	ISSUED FOR 90% REVIEW
4	02/23/15	ISSUED FOR 90% COST ESTIMATE
3	01/26/15	ISSUED FOR 60% REVIEW
2	01/16/15	ISSUED FOR PRICING
1	12/23/14	SCHEMATIC DESIGN

KJ WW ENGINEERING CONSULTANTS
The FUTURE. Built SMARTER.®
1100 WARRENVILLE ROAD, SUITE 400W
NAPERVILLE, ILLINOIS 60563
630.527.2320 FAX: 630.527.2321
www.kjww.com
PROJECT #:
Illinois Design Firm Registration #184-000973

KJWW ENGINEERING RESERVES PROPRIETARY RIGHTS, INCLUDING COPYRIGHTS, TO THIS DRAWING AND THE DATA SHOWN THEREON. SAID DRAWING AND/OR DATA ARE THE EXCLUSIVE PROPERTY OF KJWW ENGINEERING AND SHALL NOT BE USED OR REPRODUCED FOR ANY OTHER PROJECT WITHOUT THE EXPRESS WRITTEN APPROVAL AND PARTICIPATION OF KJWW ENGINEERING. © 2015 KJWW, P.C.

REFERENCE SCALE IN INCHES: 0 1 2 3

	FERMI LAB	DATE
DESIGNED	P. MUELLER	3/2/2015
DRAWN	D. WILKINS	3/2/2015
CHECKED		
APPROVED		
SUBMITTED		

S W E PROJECT NORTH

SCALE: 1/8" = 1'-0" (8 0 8 16 SCALE FEET)

NOT FOR CONSTRUCTION

FERMI NATIONAL ACCELERATOR LABORATORY

UNITED STATES DEPARTMENT OF ENERGY

SBN FAR DETECTOR BUILDING

ENCLOSURE LEVEL PLUMBING PLAN

DRAWING NO. **6-7-93** **P-3** REV. 5

02 MAR. 2015

C:\Revit Local Files\MEP15_14.0872.00 - Fermi Lab - Far Detector_CENTRAL_wellsma.rvt

3/2/2015 5:20:17 PM

KEYNOTES (#)

1. ALL PLUMBING PIPING, EQUIPMENT, AND ACCESSORIES SHALL NOT CROSS OPENING IN GRADE LEVEL FLOOR ABOVE DETECTOR UNLESS OTHERWISE NOTED ON DRAWINGS. REFER TO ARCHITECTURAL DRAWINGS FOR MORE INFORMATION REGARDING THE OPENING, DETECTOR CLEARANCES, AND OVERHEAD CRANE CLEARANCES.

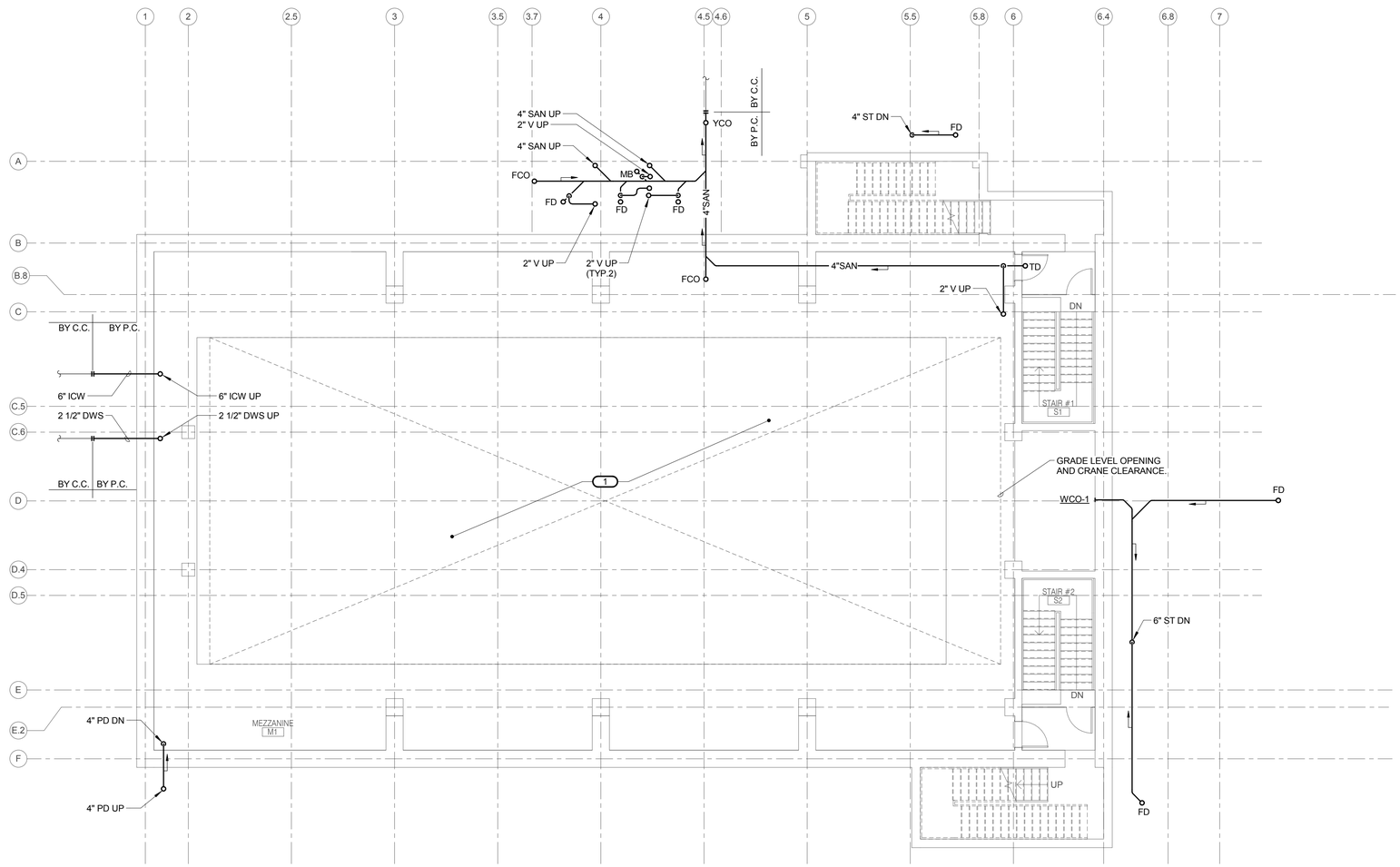

MEZZANINE LEVEL PLUMBING PLAN

REV.	DATE	
5	03/02/15	ISSUED FOR 90% REVIEW
4	02/23/15	ISSUED FOR 90% COST ESTIMATE
3	01/26/15	ISSUED FOR 60% REVIEW
2	01/16/15	ISSUED FOR PRICING
1	12/23/14	SCHEMATIC DESIGN

REVISIONS

KJWW ENGINEERING CONSULTANTS
The FUTURE. Built SMARTER.®
1100 WARRENVILLE ROAD, SUITE 400W
NAPERVILLE, ILLINOIS 60563
630.527.2320 FAX: 630.527.2321
www.kjww.com
PROJECT #:
Illinois Design Firm Registration #184-000973

KJWW ENGINEERING RESERVES PROPRIETARY RIGHTS, INCLUDING COPYRIGHTS, TO THIS DRAWING AND THE DATA SHOWN THEREON. SAID DRAWING AND/OR DATA ARE THE EXCLUSIVE PROPERTY OF KJWW ENGINEERING AND SHALL NOT BE USED OR REPRODUCED FOR ANY OTHER PROJECT WITHOUT THE EXPRESS WRITTEN APPROVAL AND PARTICIPATION OF KJWW ENGINEERING. © 2015 KJWW, P.C.

REFERENCE SCALE IN INCHES
0 1 2 3

	FERMI LAB	DATE
DESIGNED	P. MUELLER	3/2/2015
DRAWN	D. WILKINS	3/2/2015
CHECKED		
APPROVED		
SUBMITTED		

S W E PROJECT NORTH

SCALE:
1/8"=1'-0"
8 0 8 16
SCALE FEET

NOT FOR CONSTRUCTION

FERMI NATIONAL ACCELERATOR LABORATORY
UNITED STATES DEPARTMENT OF ENERGY

SBN FAR DETECTOR BUILDING
MEZZANINE LEVEL PLUMBING PLAN

DRAWING NO. **6-7-93** **P-4** REV. **5**

02 MAR. 2015

C:\Revit Local Files\MEP15_14.0872.00 - Fermi Lab - Far Detector_CENTRAL_wellsma.rvt

3/2/2015 5:20:18 PM

KEYNOTES (#)

1. ALL PLUMBING PIPING, EQUIPMENT, AND ACCESSORIES SHALL NOT CROSS OPENING IN GRADE LEVEL FLOOR ABOVE DETECTOR UNLESS OTHERWISE NOTED ON DRAWINGS. REFER TO ARCHITECTURAL DRAWINGS FOR MORE INFORMATION REGARDING THE OPENING, DETECTOR CLEARANCES, AND OVERHEAD CRANE CLEARANCES.

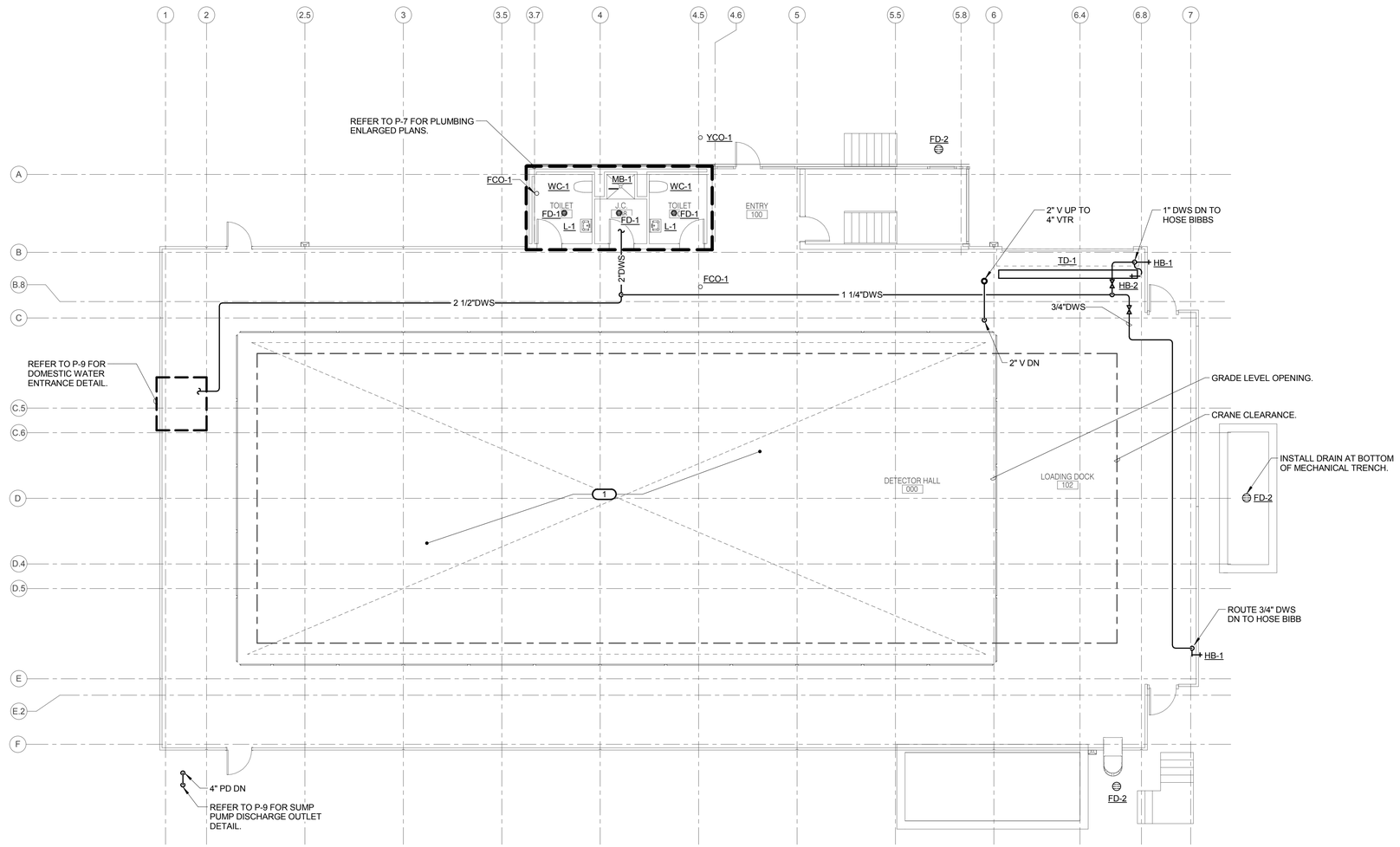

GRADE LEVEL PLUMBING PLAN

C:\Revit Local Files\MEP15_14.0872.00 - Fermi Lab - Far Detector_CENTRAL_wellsma.rvt

3/2/2015 5:20:19 PM

REV.	DATE	REVISIONS
5	03/02/15	ISSUED FOR 90% REVIEW
4	02/23/15	ISSUED FOR 90% COST ESTIMATE
3	01/26/15	ISSUED FOR 60% REVIEW
2	01/16/15	ISSUED FOR PRICING
1	12/23/14	SCHEMATIC DESIGN

KJWW ENGINEERING CONSULTANTS
The FUTURE Built SMARTER®
1100 WARRENVILLE ROAD, SUITE 400W
NAPERVILLE, ILLINOIS 60563
630.527.2320 FAX: 630.527.2321
www.kjww.com
PROJECT #:
Illinois Design Firm Registration #184-000973

KJWW ENGINEERING RESERVES PROPRIETARY RIGHTS, INCLUDING COPYRIGHTS, TO THIS DRAWING AND THE DATA SHOWN THEREON. SAID DRAWING AND/OR DATA ARE THE EXCLUSIVE PROPERTY OF KJWW ENGINEERING AND SHALL NOT BE USED OR REPRODUCED FOR ANY OTHER PROJECT WITHOUT THE EXPRESS WRITTEN APPROVAL AND PARTICIPATION OF KJWW ENGINEERING. © 2015 KJWW, P.C.

REFERENCE SCALE IN INCHES 0 1 2 3

	FERMI LAB	DATE
DESIGNED	P. MUELLER	3/2/2015
DRAWN	D. WILKINS	3/2/2015
CHECKED		
APPROVED		
SUBMITTED		

S W E PROJECT NORTH

SCALE: 1/8"=1'-0" 8 0 8 16 SCALE FEET

NOT FOR CONSTRUCTION

FERMI NATIONAL ACCELERATOR LABORATORY

UNITED STATES DEPARTMENT OF ENERGY

SBN FAR DETECTOR BUILDING

GRADE LEVEL PLUMBING PLAN

DRAWING NO. 6-7-93 P-5 REV. 5

02 MAR. 2015

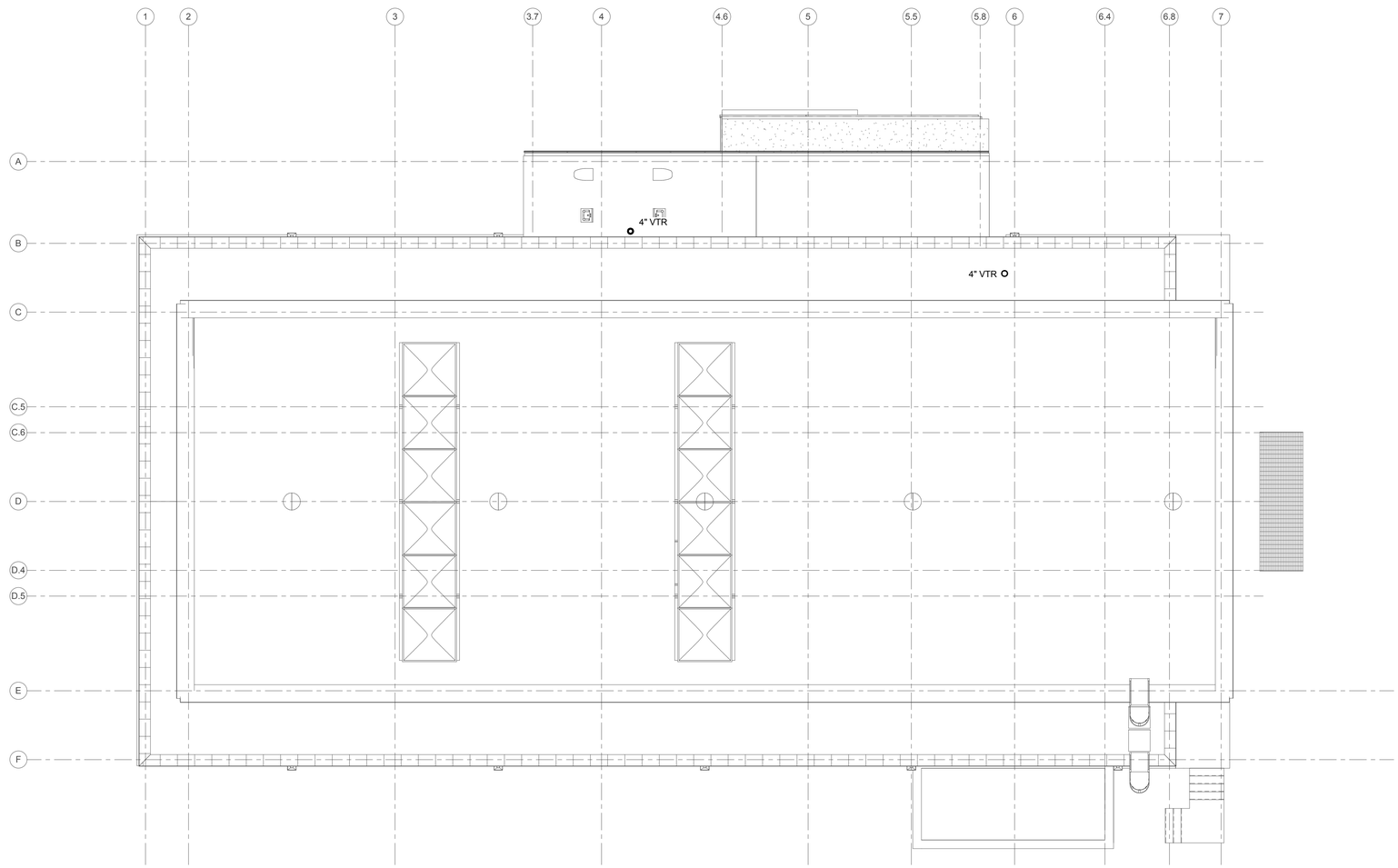

ROOF LEVEL PLUMBING PLAN

C:\Revit Local Files\MEP15_14.0872.00 - Fermi Lab - Far Detector_CENTRAL_wellsma.rvt

3/2/2015 5:20:21 PM

REV.	DATE	REVISIONS
5	03/02/15	ISSUED FOR 90% REVIEW
4	02/23/15	ISSUED FOR 90% COST ESTIMATE
3	01/26/15	ISSUED FOR 60% REVIEW
2	01/16/15	ISSUED FOR PRICING
1	12/23/14	SCHEMATIC DESIGN

KJWW ENGINEERING CONSULTANTS
The FUTURE. Built SMARTER.®
1100 WARRENVILLE ROAD, SUITE 400W
NAPERVILLE, ILLINOIS 60563
630.527.2320 FAX: 630.527.2321
www.kjww.com
PROJECT #:
Illinois Design Firm Registration #184-000973

KJWW ENGINEERING RESERVES PROPRIETARY RIGHTS, INCLUDING COPYRIGHTS, TO THIS DRAWING AND THE DATA SHOWN THEREON. SAID DRAWING AND/OR DATA ARE THE EXCLUSIVE PROPERTY OF KJWW ENGINEERING AND SHALL NOT BE USED OR REPRODUCED FOR ANY OTHER PROJECT WITHOUT THE EXPRESS WRITTEN APPROVAL AND PARTICIPATION OF KJWW ENGINEERING. © 2015 KJWW, P.C.

REFERENCE SCALE IN INCHES
0 1 2 3

	FERMI LAB	DATE
DESIGNED	P. MUELLER	3/2/2015
DRAWN	D. WILKINS	3/2/2015
CHECKED		
APPROVED		
SUBMITTED		

S W E PROJECT NORTH

SCALE:
1/8"=1'-0"
8 0 8 16
SCALE FEET

NOT FOR CONSTRUCTION

FERMI NATIONAL ACCELERATOR LABORATORY
UNITED STATES DEPARTMENT OF ENERGY

SBN FAR DETECTOR BUILDING
ROOF LEVEL PLUMBING PLAN

DRAWING NO. 6-7-93 P-6 REV. 5

02 MAR. 2015

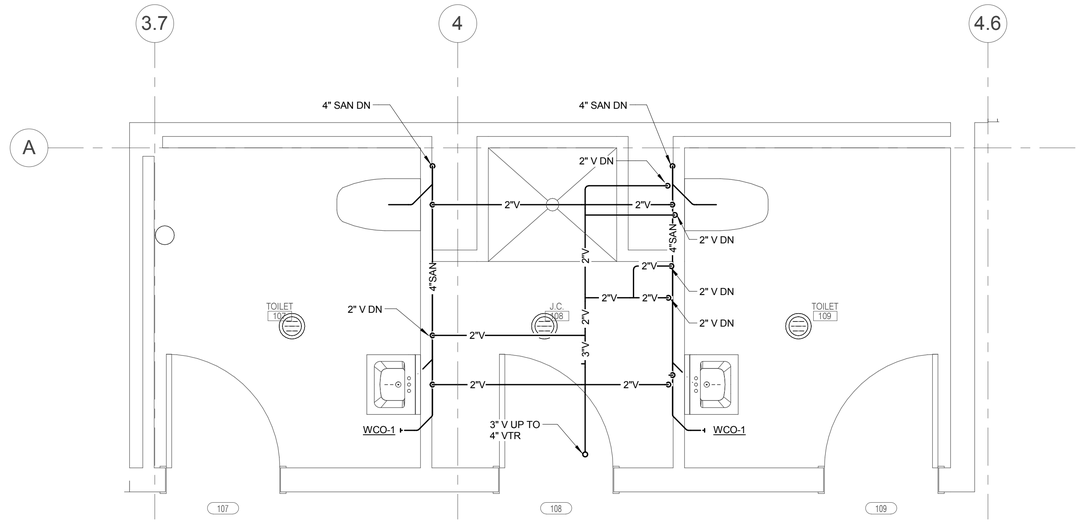

ENLARGED PLUMBING PLAN - SAN/VENT

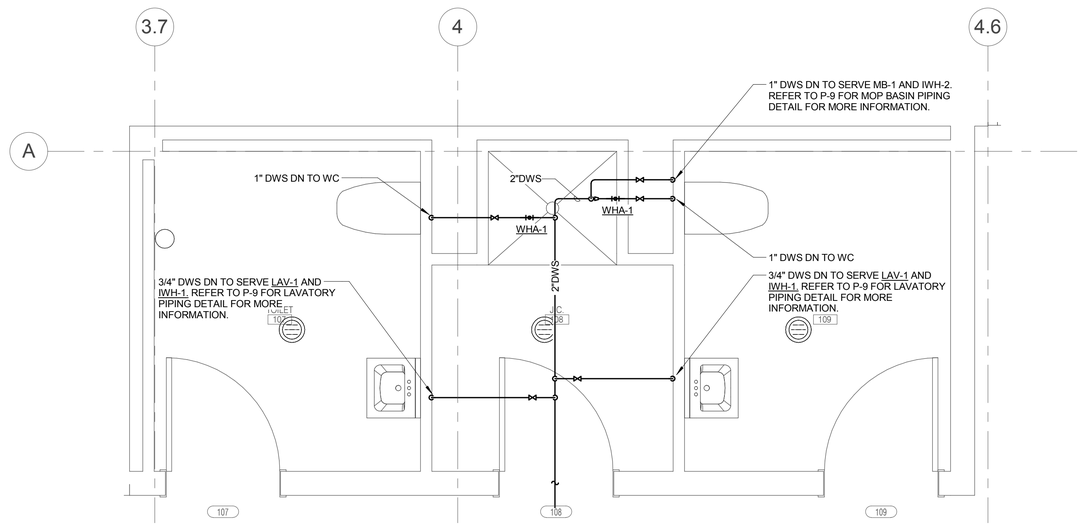

ENLARGED PLUMBING PLAN - DOMESTIC

C:\Revit Local Files\MEP15_14.0872.00 - Fermi Lab - Far Detector_CENTRAL_wellsma.rvt

3/2/2015 5:20:22 PM

REV.	DATE	REVISIONS
5	03/02/15	ISSUED FOR 90% REVIEW
4	02/23/15	ISSUED FOR 90% COST ESTIMATE
3	01/26/15	ISSUED FOR 60% REVIEW
2	01/16/15	ISSUED FOR PRICING
1	12/23/14	SCHEMATIC DESIGN

KJWW ENGINEERING CONSULTANTS
The FUTURE. Built SMARTER.®
1100 WARRENVILLE ROAD, SUITE 400W
NAPERVILLE, ILLINOIS 60563
630.527.2320 FAX: 630.527.2321
www.kjww.com
PROJECT #:
Illinois Design Firm Registration #184-000973

KJWW ENGINEERING RESERVES PROPRIETARY RIGHTS, INCLUDING COPYRIGHTS, TO THIS DRAWING AND THE DATA SHOWN THEREON. SAID DRAWING AND/OR DATA ARE THE EXCLUSIVE PROPERTY OF KJWW ENGINEERING AND SHALL NOT BE USED OR REPRODUCED FOR ANY OTHER PROJECT WITHOUT THE EXPRESS WRITTEN APPROVAL AND PARTICIPATION OF KJWW ENGINEERING. © 2015 KJWW, P.C.

REFERENCE SCALE IN INCHES
0 1 2 3

FERMI LAB		DATE
DESIGNED	P. MUELLER	3/2/2015
DRAWN	D. WILKINS	3/2/2015
CHECKED		
APPROVED		
SUBMITTED		

S W E PROJECT NORTH

SCALE:
1/2" = 1'-0"
2 0 2 4
SCALE FEET

NOT FOR CONSTRUCTION

FERMI NATIONAL ACCELERATOR LABORATORY
UNITED STATES DEPARTMENT OF ENERGY

SBN FAR DETECTOR BUILDING
PLUMBING ENLARGED PLAN

DRAWING NO. **6-7-93** **P-7** REV. **5**

02 MAR. 2015

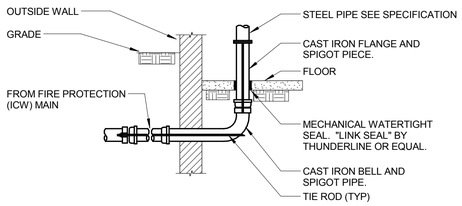

MAIN ENTERING BLDG.

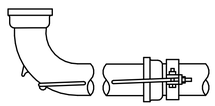

ANCHOR FOR LONG SPIGOT 1/4 BEND.

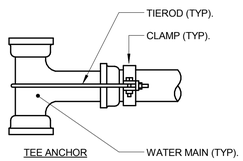

TEE ANCHOR

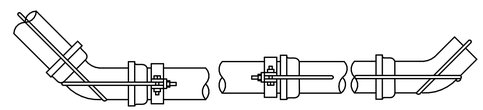

ONE-EIGHT BEND, SPIGOT TO PIPE BELL

ONE-EIGHT BEND, BELL TO PIPE SPIGOT

ANCHOR RODS

ROD AND CLAMP ANCHORAGE

PIPING NOMINAL SIZE (IN.)	CLAMP SIZE (IN.)	BOLT SIZE (IN.)	WASHER (IN.)		NUMBER OF RODS AND ROD SIZE(IN.) FOR ROD AND CLAMP ANCHORAGE					
					MECHANICAL JOINT			PUSH ON JOINT		
			CAST IRON	STEEL	90° 1/4 BEND	45° 1/8 BEND	TEE, HYDRANT CAP, PLUG	90° 1/4 BEND	45° 1/8 BEND	TEE, HYDRANT CAP, PLUG
4	1/2x2	5/8	5/8x3	1/2x3	2 3/4	2 3/4	2 3/4	2 3/4	2 3/4	2 3/4
6					2 3/4	2 3/4	2 3/4	2 3/4	2 3/4	2 3/4

NOTES:

1. AFTER INSTALLATION, PROTECT TIE RODS, BOLTS, NUTS, WASHERS AND CLAMPS AGAINST CORROSION WITH A HEAVY COAT OF ASPHALT MATERIAL.
2. THE LENGTH OF THE ROD REQUIRED WILL VARY WITH THE PIPE FITTING, AND MUST BE DETERMINED BY FIELD MEASUREMENT. IF THE DISTANCE BETWEEN THE JOINTS IS LESS THAN 12 FEET, EXTEND THE ANCHORAGE TO THE SECOND BELL.

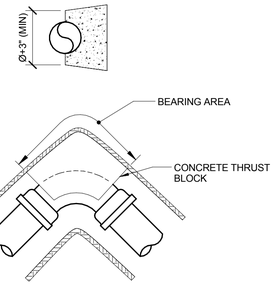

ONE-QUARTER BEND

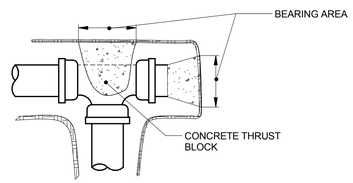

THRUST BLOCKS

AREA OF BEARING FACE OF CONCRETE THRUST BLOCKS

PIPING NOMINAL SIZE (IN.)	MIN. SQ. FT. CAST IRON AND DUCTILE IRON		
	1/4 BEND	1/8 BEND	TEES, PLUGS, CAPS, HYDRANTS
4	3	2	3
6	7	4	5

BASIS: 2,000 LB/SQ.FT. SOIL RESISTANCE.
250 PSI WATER PRESSURE.
CORRECTION FACTORS FOR OTHER SOILS:
SOFT CLAY.....4
SAND.....2
SAND&GRAVEL...1.33
SHALE.....0.4

UNDERGROUND WATER MAIN ANCHORING DETAIL

NOTES:

1. BOTH THRUST BLOCKING AND ANCHOR RODS ARE REQUIRED.
2. REFER TO THE GOVERNING CODE AND NFPA 24 FOR ADDITIONAL REQUIREMENTS.

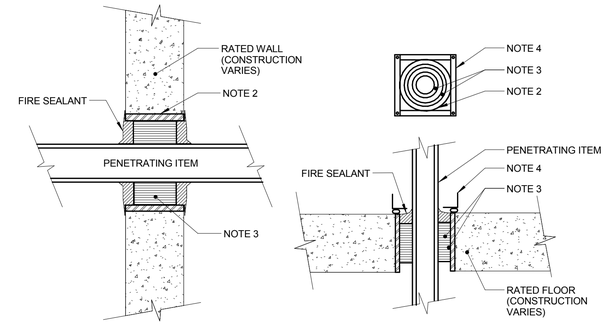

RATED FIRE BARRIER PENETRATION

NOTES:

1. THIS GENERAL DETAIL APPLIES TO ALL ITEMS PENETRATING FIRE RATED WALLS OR FLOORS. THE INTENT IS TO MAINTAIN THE FIRE RATING AND TO ALLOW LONGITUDINAL MOVEMENT. REFER TO SPECIFICATION SECTION 07840 (07 84 00) (15080) (SECTION 21 05 03 - FIRE PROTECTION, SECTION 22 05 03 - PLUMBING , SECTION 23 05 03 - HVAC) FOR SELECTION OF THROUGH PENETRATION FIRE STOPPING.
2. SCHEDULE 5 PIPE SLEEVE EMBEDDED IN WALL OR FLOOR, OR SMOOTH CORE DRILL. EACH SUBCONTRACTOR FURNISHES SLEEVE TO G.C., COORDINATES SLEEVE LOCATIONS AND DEBURS SLEEVE. G.C. BUILDS SLEEVE INTO WALL OR FLOOR ALLOWING NO GAP AROUND SLEEVE. IF SLEEVE IS NOT PROVIDED WHEN WALL OR FLOOR IS BUILT, SUBCONTRACTOR SHALL INSTALL SLEEVE. SLEEVE SIZE SHALL ALLOW ANNULAR SPACE REQUIRED BY THE SELECTED FIRE STOP SYSTEM.
3. INSTALL BACKING MATERIAL, SUCH AS MINERAL WOOL SAFING, AS REQUIRED FOR FIRE STOP SYSTEM. INSTALL IN ACCORDANCE WITH FIRE STOP SYSTEM APPLICATION LISTING. SECURE TO WALL OR FLOOR TO ALLOW LONGITUDINAL MOVEMENT OF PENETRATING ITEM WITHOUT MOVEMENT OF FIRE BARRIER.
4. WATER-TIGHT WELDED 1"x1" 20 GAUGE MINIMUM GALVANIZED SHEET METAL ANGLE FRAME, BY SUBCONTRACTOR IN EQUIPMENT ROOMS FOR WATER STOP. PLACE A BEAD OF WATERPROOF SEALANT BETWEEN FLOOR AND BOTTOM OF ANGLE FRAME. SECURE TO FLOOR WITH MASONRY ANCHORS IN CORNERS AND ON 12" MAXIMUM CENTERS. MULTIPLE PENETRATING ITEMS MAY BE ENCLOSED IN ONE FRAME.

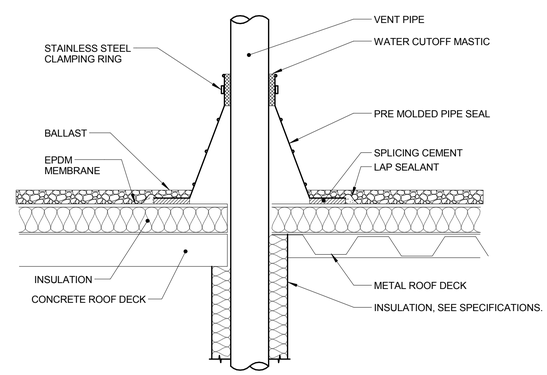

VENT PIPE FLASHING

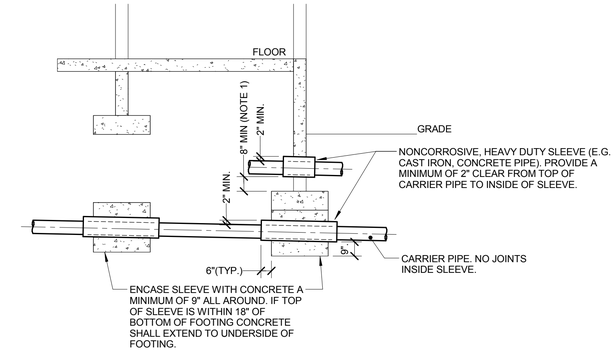

PIPE UNDER FOOTING DETAIL

NOTES:

1. STEP FOOTING DOWN AS REQUIRED TO MAINTAIN 8" MINIMUM DIMENSION.

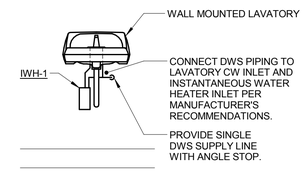

LAVATORY PIPING DETAIL

REV.	DATE	
5	03/02/15	ISSUED FOR 90% REVIEW
4	02/23/15	ISSUED FOR 90% COST ESTIMATE
3	01/26/15	ISSUED FOR 60% REVIEW
2	01/16/15	ISSUED FOR PRICING
1	12/23/14	SCHEMATIC DESIGN

REVISIONS

KJWW ENGINEERING CONSULTANTS
The FUTURE. Built SMARTER.®
1100 WARRENVILLE ROAD, SUITE 400W
NAPERVILLE, ILLINOIS 60563
630.527.2320 FAX: 630.527.2321
www.kjww.com
PROJECT #:
Illinois Design Firm Registration #184-000973

KJWW ENGINEERING RESERVES PROPRIETARY RIGHTS, INCLUDING COPYRIGHTS, TO THIS DRAWING AND THE DATA SHOWN THEREON. SAID DRAWING AND/OR DATA ARE THE EXCLUSIVE PROPERTY OF KJWW ENGINEERING AND SHALL NOT BE USED OR REPRODUCED FOR ANY OTHER PROJECT WITHOUT THE EXPRESS WRITTEN APPROVAL AND PARTICIPATION OF KJWW ENGINEERING. © 2015 KJWW, P.C.

REFERENCE SCALE IN INCHES
0 1 2 3

	FERMI LAB	DATE
DESIGNED	P. MUELLER	3/2/2015
DRAWN	D. WILKINS	3/2/2015
CHECKED		
APPROVED		
SUBMITTED		

SCALE:

NOT FOR CONSTRUCTION

FERMI NATIONAL ACCELERATOR LABORATORY
UNITED STATES DEPARTMENT OF ENERGY

SBN FAR DETECTOR BUILDING
PLUMBING DETAILS

DRAWING NO. 6-7-93 P-8 REV. 5

02 MAR. 2015

C:\Revit Local Files\MEP15_14.0872.00 - Fermi Lab - Far Detector_CENTRAL_wellsma.rvt

3/2/2015 5:20:23 PM

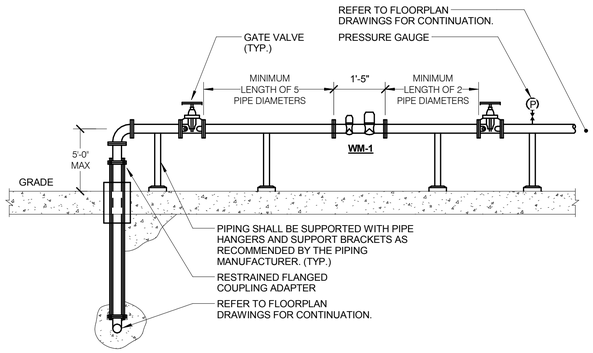

DOMESTIC WATER ENTRANCE

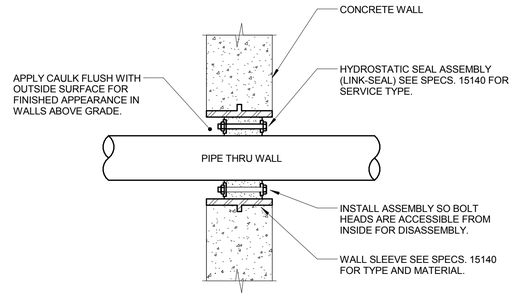

EXTERIOR WALL PENETRATION

NOTES:

1. SUBCONTRACTOR MAY FABRICATE PIPE SLEEVE.
2. SEAL SELECTION BASED ON OLD. OF PIPE THRU WALL AND I.D. OF SLEEVE.
3. SLEEVE NOT REQUIRED FOR CORE DRILLED PENETRATIONS.

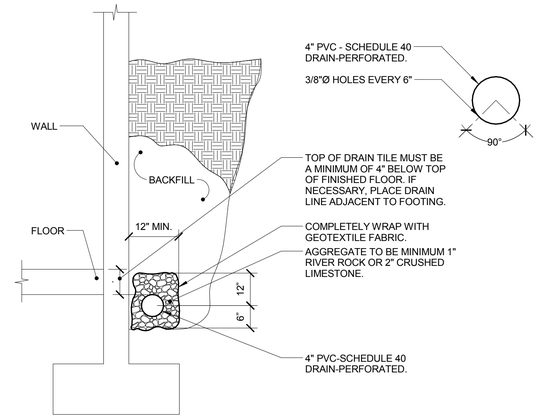

DRAIN TILE DETAIL

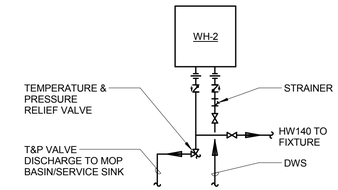

MOP BASIN PIPING DETAIL

NOTES:

1. MOUNT WATER HEATER PER DIRECTIONS ON DRAWINGS AND PLUMBING MATERIAL LIST.
2. INSTALL STRAINER UPSTREAM OF WATER HEATER.

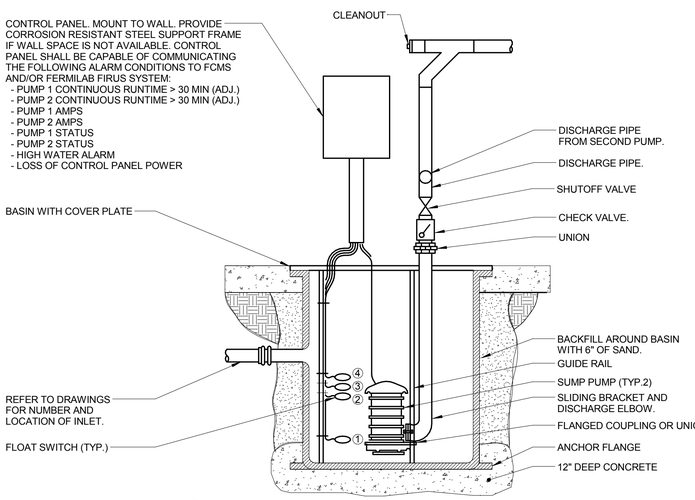

① PUMP OFF. MAINTAIN WATER ABOVE INLET AS REQUIRED PER PUMP MANUFACTURER.
② START PUMP WHEN WATER LEVEL IS 9" BELOW INVERT OF LOWEST INLET.
③ START SECONDARY PUMP WHEN WATER LEVEL IS 6" BELOW OF LOWEST INLET.
④ ALARM WHEN WATER LEVEL 3" BELOW INVERT OF LOWEST INLET.

SUMP PUMP(DUPLEX) DETAIL

NOTES:

1. SUMP PUMPS THAT DISCHARGE TO STORM SHALL BE INSTALLED WITH THE TOP OF THE SUMP BASIN 2" ABOVE FLOOR LEVEL A 2" HIGH X4" WIDE CONCRETE CURB AROUND THE PERIMETER OF THE BASIN LID MAY BE USED IN LIEU OF RAISING THE ENTIRE SUMP BASIN. COORDINATE CONCRETE CURB WITH G.C.

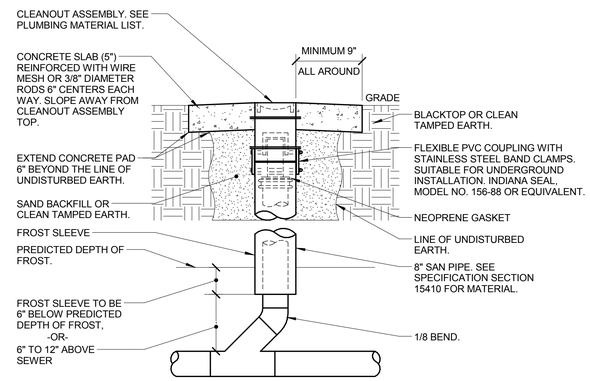

YARD CLEANOUT DETAIL

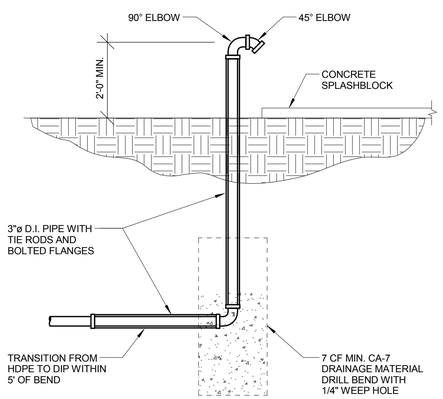

SUMP PUMP DISCHARGE OUTLET DETAIL

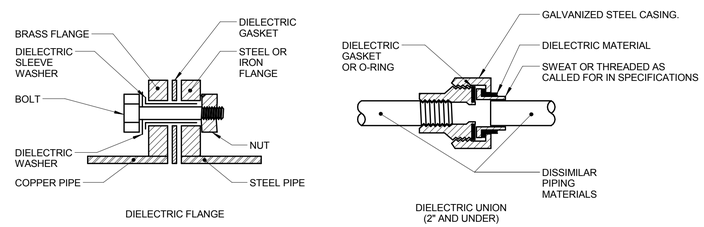

DIELECTRIC CONNECTION DETAIL

REV.	DATE	
5	03/02/15	ISSUED FOR 90% REVIEW
4	02/23/15	ISSUED FOR 90% COST ESTIMATE
3	01/26/15	ISSUED FOR 60% REVIEW
2	01/16/15	ISSUED FOR PRICING
1	12/23/14	SCHEMATIC DESIGN

REVISIONS

KJWW ENGINEERING CONSULTANTS
The FUTURE Built SMARTER®
1100 WARRENVILLE ROAD, SUITE 400W
NAPERVILLE, ILLINOIS 60563
630.527.2320 FAX: 630.527.2321
www.kjww.com
PROJECT #:
Illinois Design Firm Registration #184-000973

KJWW ENGINEERING RESERVES PROPRIETARY RIGHTS, INCLUDING COPYRIGHTS, TO THIS DRAWING AND THE DATA SHOWN THEREON. SAID DRAWING AND/OR DATA ARE THE EXCLUSIVE PROPERTY OF KJWW ENGINEERING AND SHALL NOT BE USED OR REPRODUCED FOR ANY OTHER PROJECT WITHOUT THE EXPRESS WRITTEN APPROVAL AND PARTICIPATION OF KJWW ENGINEERING. © 2015 KJWW, P.C.

REFERENCE SCALE IN INCHES 0 1 2 3

FERMI LAB		DATE
DESIGNED	P. MUELLER	3/2/2015
DRAWN	D. WILKINS	3/2/2015
CHECKED		
APPROVED		
SUBMITTED		

SCALE:

NOT FOR CONSTRUCTION

FERMI NATIONAL ACCELERATOR LABORATORY

UNITED STATES DEPARTMENT OF ENERGY

SBN FAR DETECTOR BUILDING

PLUMBING DETAILS

DRAWING NO. 6-7-93 P-9 REV. 5

02 MAR. 2015

C:\Revit Local Files\MEP15_14.0872.00 - Fermi Lab - Far Detector_CENTRAL_wellsma.rvt

3/2/2015 5:20:24 PM

PLUMBING MATERIAL LIST

THE SYMBOLS AND THE MATERIAL LIST ARE FOR THE CONVENIENCE OF THE SUBCONTRACTOR. SUBCONTRACTOR SHALL VERIFY QUANTITIES AND FURNISH ALL MATERIALS REQUIRED FOR FULLY OPERATIONAL SYSTEMS, WHETHER SPECIFIED OR NOT.

CATALOG NUMBERS SHALL NOT BE CONSIDERED COMPLETE, BUT ARE GIVEN AS AN AID TO THE SUBCONTRACTOR AND TO INDICATE THE QUALITY REQUIRED. SUBCONTRACTOR IS RESPONSIBLE FOR COMPLETE DESCRIPTION OF MATERIAL ON THESE DRAWINGS AND IN THE SPECIFICATIONS BEFORE ORDERING. THE DESCRIPTION OF THE MATERIAL TAKES PRECEDENCE OVER THE CATALOG NUMBER. THE FIRST MANUFACTURER LISTED IS THE BASIS OF DESIGN.

SUBCONTRACTOR SHALL VERIFY THAT FIXTURES SUPPLIED ARE APPROVED PER ALL APPLICABLE STATE, LOCAL AND GOVERNING AUTHORITIES.

ALL FIXTURES SHALL CONFORM TO FEDERAL ACT S.3874.

FCO-1

FLOOR CLEANOUT - ADJUSTABLE, CAST IRON HOUSING, ANCHOR FLANGE, TAPERED THREAD PLUG, SECURED NICKEL BRONZE TOP. TOP STYLE SHALL MATCH FLOOR FINISH AS FOLLOWS:

UNFINISHED FLOOR - ROUND SOLID SCORIATED TOP

ACCEPTABLE MANUFACTURERS: ZURN (Z1400), JOSAM (55000), MIFAB (C1100), SMITH (4000), WADE (6000), WATTS (CO-200)

FD-1

FLOOR DRAIN - CAST IRON BODY, NICKEL BRONZE ADJUSTABLE TOP, 8" ROUND, 4" BOTTOM OUTLET, FLASHING COLLAR, DEEP SEAL TRAP.

TRAP SEAL - 4". PLASTIC HOUSING WITH FLEXIBLE DIAPHRAGM, SEALING GASKETS, RECLOSES AND SEALS WHEN DISCHARGE IS COMPLETED, ASSE 1072.

ACCEPTABLE MANUFACTURERS: FLOOR DRAIN - ZURN (Z-415), SMITH (2005), WADE (1100), JOSAM (30000), WATTS (FD-100), MIFAB (F1100)

TRAP SEAL - SURE SEAL (SS), PROVENT (TRAP GUARD), SMITH (QUAD CLOSE)

FD-2

FLOOR DRAIN - CAST IRON BODY, HEAVY DUTY CAST/DUCTILE IRON TOP, 12" ROUND, 4" BOTTOM OUTLET, MEDIUM SUMP, FREE STANDING SEDIMENT BUCKET, FLASHING COLLAR, DEEP SEAL TRAP.

ACCEPTABLE MANUFACTURERS: ZURN (Z-541), SMITH (2142), WADE (1210), WATTS (FD-340), MIFAB (F1340)

HB-1

HOSE BIBB - FREEZELESS WALL HYDRANT, BRASS VALVE BODY AND SEAT, STANDARD FINISH, NON-FERROUS METAL STEM, AUTOMATIC DRAINING, VACUUM BREAKER, 3/4" MALE HOSE THREAD. WALL CLAMP. CONCEALED IN FLUSH MOUNTED LOCKABLE WALL BOX, KEY OPERATED, ASSE 1019 APPROVED AND LISTED.

VERIFY NUMBER OF KEY OPERATORS TO BE PROVIDED WITH FERMILAB. BOX COVER AND HYDRANT SHALL USE A COMMON KEY. MOUNT AT 18" ABOVE GRADE UNLESS NOTED OTHERWISE ON DRAWINGS.

ACCEPTABLE MANUFACTURERS: WOODFORD (B67), ZURN (Z1300), JOSAM (71000), WATTS (HY-725), PRIER (C-534-WB), MIFAB (MHY-20), SMITH (5509QT).

HB-2

HOSE BIBB - INDOOR WALL HYDRANT, BRASS CONSTRUCTION, STANDARD FINISH, VACUUM BREAKER, 3/4" MALE HOSE THREAD, METAL WHEEL HANDLE.

MOUNT AT 18" ABOVE FINISH FLOOR.

ACCEPTABLE MANUFACTURERS: WOODFORD (24), CHICAGO FAUCET (293), ACORN (8121), PRIER (C-135AS), T&S BRASS (B-0736), MIFAB (MHY-90).

L-1

LAVATORY - ACCESSIBLE, WALL MOUNTED, WHITE VITREOUS CHINA, 20"x18", 4" HIGH CONTOURED BACKSPLASH, SINGLE FAUCET HOLE, DRILLED FOR CONCEALED ARM CARRIER.

LAVATORY TRIM - SENSOR ACTIVATED MIXING FAUCET, HARD-WIRED, BRASS CONSTRUCTION, CHROME-PLATED FINISH, CONVENTIONAL SPOUT WITH VANDAL-RESISTANT AERATOR OUTLET, SINGLE HOLE, INTEGRAL CHECK VALVES, PERFORATED GRID STRAINER WITH 1-1/4" 17 GAUGE TAILPIECE, INTERNAL ADJUSTABLE TEMPERATURE LIMIT STOP, FAUCET MOUNTED CONTROLS, WATERPROOF CONNECTORS AND 10' LONG CABLE, UL APPROVED TRANSFORMER.

ELECTRICAL REQUIREMENTS - 120 VAC INPUT

MOUNT TRANSFORMER ABOVE CEILING OR IN ACCESSIBLE PIPE CHASE. MAXIMUM FLOW TO BE 0.5 GPM IN COMPLIANCE WITH ENERGY POLICY ACT OF 2005 AND ASME/ANSI STANDARD A112.18.1M. FAUCET SHALL COMPLY WITH FEDERAL ACT S.3874. PROVIDE RESTRICTIVE DEVICE AND ESCUTCHEON PLATE AS REQUIRED.

INSULATION KIT - PRE-MANUFACTURED FOR P-TRAP, STOP VALVES AND SUPPLY LINES.

ACCESSORIES - QUARTER-TURN 3/8" CHROME PLATED HEAVY BRASS ANGLE SUPPLY LOOSE KEY STOPS, CHROME PLATED SOFT COPPER SUPPLY LINES, DRAIN AND OFFSET TAILPIECE, 1-1/4" 20 GAUGE CAST BRASS P-TRAP, SUPPORT CARRIER.

MOUNT LAVATORY WITH SUPPORT CARRIER BOLTED SECURELY TO FLOOR. TOP OF RIM SHALL BE AT 34" ABOVE FLOOR IN COMPLIANCE WITH LATEST ADA STANDARD. PROVIDE 29" MINIMUM CLEARANCE FROM FLOOR TO BOTTOM OF APRON IN COMPLIANCE WITH LATEST ANSI A117.1 AND ADA STANDARDS. ARMAFLEX WITH TAPE IS NOT ACCEPTABLE IN LIEU OF INSULATION KIT.

ACCEPTABLE MANUFACTURERS: LAVATORY -
AMERICAN STANDARD (0356.421), KOHLER (K-2007), SLOAN (SS-3103), TOTO (LT307), ZURN (Z5361)

LAVATORY TRIM - SYMMONS (S-6080), DELTA (DEMD-111), AMERICAN STANDARD (7055.215), CHICAGO FAUCET (116.221.AB.1), HYDROTEK (5000EM-LR), MOEN (8307), SLOAN (EAF-150)

INSULATION KIT - TRUEBRO (LAV-GUARD), BROCAR PRODUCTS (TRAP WRAP), MCGUIRE (PROWRAP), PLUMBEREX (PRO-EXTREME).

PLUMBING MATERIAL LIST (CONTINUED)

MB-1

MOP BASIN - PRECAST TERRAZZO, 24"x24"x12", STAINLESS STEEL INTEGRAL DRAIN WITH REMOVABLE STRAINER, 3" OUTLET, CONTINUOUS STAINLESS STEEL CAP ON ALL EDGES.

TRIM - EXPOSED TWO HANDLE MIXING FAUCET, BRASS CONSTRUCTION, CHROME-PLATED FINISH, SINGLE WING HANDLES, 1/4 TURN CERAMIC DISC CARTRIDGE, 3/4" HOSE THREAD SPOUT WITH INTEGRAL VACUUM BREAKER, WALL BRACE, PAIL HOOK, CHECK STOPS OR INLINE CHECK VALVES TO PREVENT THERMAL CROSSOVER. FAUCET SHALL COMPLY WITH FEDERAL ACT S.3874.

ACCESSORIES - MOP HANGER, HOSE AND HOSE BRACKET, DEEP SEAL TRAP

ACCEPTABLE MANUFACTURERS: MOP BASIN - FIAT (TSB), ACORN (TSH), CREATIVE INDUSTRIES (MC), WILLIAMS (SB)

TRIM - DELTA (28C2393), AMERICAN STANDARD (8344.012), MOEN (8124), SPEAKMAN (SC-5812), SYMMONS (S-2490), ZURN (Z841M1-XL).

SP-1

SUMP PUMP - DUPLEX SUBMERSIBLE, SINGLE-STAGE, CENTRIFUGAL, END-SUCTION PUMPS, STAINLESS STEEL FASTENERS, GUARDS AND HANDLES, UL LISTED.

CASING: CAST IRON, INTEGRAL SUPPORT FEET, MINIMUM 3" HORIZONTAL DISCHARGE.
IMPELLER: CAST IRON STATICALLY AND DYNAMICALLY BALANCED, SEMIOPEN NONCLOG DESIGN, KEYED AND SECURED TO SHAFT, PASSES 2" SOLIDS MINIMUM.
SHAFT: STAINLESS STEEL WITH FACTORY SEALED, GREASE-LUBRICATED BALL BEARINGS, CARBON AND CERAMIC UPPER SEAL, SILICON CARBIDE LOWER SEAL.
MOTOR: 5 HP, 480 VOLTS, 3 PHASE, 3450 RPM, AIR-FILLED, HERMETICALLY SEALED WITH AUTO THERMAL OVERLOAD PROTECTION, THREE CONDUCTOR WATERPROOF POWER CABLE OF SUFFICIENT LENGTH.

CAPACITY (EACH PUMP): 150 GPM, 55 FEET OF HEAD.

CONTROLS - WALL MOUNTED NEMA 4X ENCLOSURE, DUPLEX (4) FLOAT WITH AUTOMATIC ALTERNATOR TO LEAD-LAG PUMPS AND ALSO ALLOW BOTH PUMPS TO RUN DURING HIGH LOAD, RUN LIGHT, TEST-OFF-AUTO AND DISCONNECTING MEANS FOR EACH PUMP, HIGH WATER ALARM WITH HORN, STROBE, SILENCING BUTTON AND DRY CONTACTS FOR ALARM AND PUMP STATUS, UL LISTED. FLOATS SHALL BE MERCURY-FREE.

REMOVAL SYSTEM - QUICK REMOVAL SYSTEM WITH BASE ELBOW, 3" ANSI DISCHARGE FITTINGS AND UPPER GUIDE BRACKET. SUBCONTRACTOR TO FURNISH (2) 2" GUIDE RAILS FOR EACH PUMP.

BASIN - 48" FIBERGLASS CONSTRUCTION, 48" DIAMETER x 84" DEEP, ANCHOR FLANGE, PIPE INLET(S) AS SHOWN ON DRAWING, CAST IRON OR STEEL GASKETED SOLID COVER WITH OPENINGS FOR PUMP ACCESS, 4" DISCHARGE PIPE FLANGE(S), CONTROL AND POWER CORDS, INSPECTION PORT, STAINLESS STEEL LIFTING CABLE SECURED TO SIDE OF BASIN GALVANIZED STEEL GUIDE RAIL SUPPORTS ANCHORED TO BASIN BASE AND COVER OR SIDEWALL WITH DISCHARGE ELBOW, SEALING PLATE AND STAINLESS STEEL LIFITING CABLE. BASIN SHALL BE BUILT WITH GLASSED IN REMOVAL SYSTEM STUDS AT FACTORY.

COVER SHALL BE SECURED AND FLUSH TO TOP OF BASIN CURB. COORDINATE COVER MOUNTING AND SECURING METHOD WITH GENERAL SUBCONTRACTOR.

ACCEPTABLE MANUFACTURERS:

PUMP - WEIL (2562DS)
REMOVAL SYSTEM - WEIL (2613)
CONTROLS - WEIL (SERIES 8100)

TD-1

TRENCH DRAIN - MODULAR, PRE-SLOPED, HEAVY DUTY PRECAST POLYMER CONCRETE, 4" WIDE CHANNEL, 0.6% SLOPE, EXTRA HEAVY DUTY LOCKING DUCTILE IRON GRATE, CLASS E RATED, INTEGRAL CATCH BASINS WITH SEDIMENT BUCKETS, 4" OUTLETS, LENGTH AS SHOWN ON DRAWINGS.

ACCEPTABLE MANUFACTURERS: SMITH (9814), ABT (POLYDRAIN), WATTS (600 SERIES), ACO (100K)

WC-1

WATER CLOSET - ACCESSIBLE, WALL HUNG, FLUSH VALVE TYPE, WHITE VITREOUS CHINA, SIPHON JET, HIGH EFFICIENCY RATED FOR 1.28 GPF, ELONGATED BOWL, 1-1/2" TOP SPUD.

FLUSH VALVE - EXPOSED, SENSOR OPERATED, HARDWIRED, 1.28 GALLONS PER FLUSH, CHROME PLATED 1" I.P.S. SCREWDRIVER STOP-CHECK VALVE, CHEMICAL RESISTANT MATERIAL, VACUUM BREAKER, WALL AND SPUD FLANGES, MECHANICAL OVER-RIDE BUTTON, RANGE ADJUSTMENT SCREW, CHROME PLATED COVER PLATE WITH TAMPER-PROOF SCREWS, TRANSFORMER CAPABLE OF OPERATING UP TO 10 UNITS, 3 YEAR WARRANTY.

SEAT - WHITE, EXTRA HEAVY, OPEN FRONT, INJECTION MOLDED SOLID ANTI-MICROBIAL PLASTIC, SELF-SUSTAINING CHECK HINGE, STAINLESS STEEL OR PLATED STEEL POSTS AND NUTS.

SUBCONTRACTOR OPTION: COMBINATION WATER CLOSET/FLUSH VALVE PACKAGED SYSTEM BY AMERICAN STANDARD, SLOAN, OR ZURN

ELECTRICAL REQUIREMENTS - 120VAC INPUT

ACCESSORIES - WATER CLOSET SUPPORT CARRIER RATED FOR 500 LBS.

MOUNT WATER CLOSET WITH CARRIER BOLTED SECURELY TO FLOOR. TOP OF SEAT SHALL BE AT 17"-19" ABOVE FINISHED FLOOR (VERIFY EXACT MOUNTING HEIGHT WITH MANUFACTURER). FLUSH HANDLE SHALL BE LOCATED ON THE WIDE SIDE OF THE TOILET STALL AND BE AT 12" (MAXIMUM) ABOVE BOWL RIM AND OPERATE WITH NO GREATER THAN 5 LB FORCE IN COMPLIANCE WITH LATEST ADA STANDARDS. VERIFY EQUIPMENT REQUIREMENTS AND ROUGH-IN LOCATIONS.

ACCEPTABLE MANUFACTURERS: WATER CLOSET - AMERICAN STANDARD (2257.001), SLOAN (ST-2050), ZURN (Z5615), KOHLER (K-4325), TOTO (CT708E)

FLUSH VALVE - ZURN (ZEMS6000AV-HET), SLOAN (ROYAL 111-1.28 ESS), AMERICAN STANDARD (6067.121), HYDROTEK (H8-128), MOEN (8311AC12), TOTO

SEAT -
BEMIS (3155C), CHURCH (3155C), BENEKE (533PC), OLSONITE (95), SAME AS WATER CLOSET MANUFACTURER.

WCO-1

WALL CLEANOUT - END CAP, CAST IRON ACCESS BODY, GAS AND WATERTIGHT BRONZE OR BRASS THREADED PLUG, ROUND STAINLESS STEEL ACCESS COVER, EXTENDED MACHINE SCREW.

ACCEPTABLE MANUFACTURERS: ZURN (Z-1441), SMITH (4422), WADE (W-8480-R/8550), JOSAM (58600-CO), WATTS (CO-380-RD).

PLUMBING MATERIAL LIST (CONTINUED)

WH-1

WATER HEATER - ELECTRIC INSTANTANEOUS POINT-OF-USE (FOR SINGLE LOW FLOW FIXTURE), 0.3 GPM TURN ON, STEEL POWDER COATED COVER, 3/8" COMPRESSION FITTINGS, REPLACEABLE ELEMENT, REPLACEABLE FILTER AT INLET CONNECTION, ENCLOSED DIGITAL MICROPROCESSING TEMPERATURE CONTROL CAPABLE OF MAINTAINING OUTLET TEMPERATURE OF +/- 1°F AND USES AN ASSE 1070 APPROVED INTEGRATED MIXING VALVE. 150 PSI WORKING PRESSURE, 1-YEAR WARRANTY ON ELEMENT, 5-YEAR WARRANTY ON HEATER BODY/ELEMENT ASSEMBLY, UL LISTED.

66°F RISE AT 0.5 GPM, 4.9 KW ELEMENT

ELECTRICAL REQUIREMENTS - 208V-3 PHASE, HARD-WIRED

MOUNT WATER HEATER ON WALL BELOW SINK OR LAVATORY. OUTPUT WATER TEMPERATURE FACTORY SET TO 105°F.

ACCEPTABLE MANUFACTURERS: EEMAX (MT), BRADFORD WHITE, CHRONOMITE.

WH-2

WATER HEATER - ELECTRIC INSTANTANEOUS POINT-OF-USE (FOR MULTIPLE FIXTURES), 0.7 GPM TURN ON, STEEL POWDER COATED COVER, 1/2" COMPRESSION FITTINGS, THERMOSTATICALLY CONTROLLED, ENCLOSED CONTROLS, FULLY ADJUSTABLE THERMOSTAT (100-140°F), HIGH TEMPERATURE LIMIT SWITCH, 150 PSI WORKING PRESSURE, REPLACEABLE ELEMENT, 1-YEAR WARRANTY ON ELEMENT, 5-YEAR WARRANTY ON HEATER BODY/ELEMENT ASSEMBLY, UL LISTED.

61°F RISE AT 2.0 GPM, 18 KW ELEMENT, 50 AMPS/PHASE - TURN ON AT 0.7 GPM OR LESS

ELECTRICAL REQUIREMENTS - 208V-3 PHASE, HARD-WIRED

MOUNT WATER HEATER ON WALL. SET OUTPUT WATER TEMPERATURE AT 140°F.

ACCEPTABLE MANUFACTURERS: EEMAX (EX180T2T ML), BRADFORD WHITE (EFT), CHRONOMITE (S)

WHA-1

WATER HAMMER ARRESTER – PISTON TYPE, PRE-CHARGED WITH 60 PSIG AIR, LEAD FREE, COPPER BODY, BRASS OR HIGH HEAT POLY-PROPYLENE PISTON WITH DUAL EPDM O-RING SEALS LUBRICATED WITH FDA APPROVED SILICONE LUBRICANT. PDI CERTIFIED, A.S.S.E. 1010 APPROVED FOR SEALED WALL INSTALLATION, RATED FOR 1-11 FIXTURE UNITS.

INSTALL PER MANUFACTURER'S RECOMMENDATIONS.

ACCEPTABLE MANUFACTURERS: WATTS (LF15M2-DR), SIOUX CHIEF (650 SERIES), MIFAB (MWH), PPP (SC SERIES), ZURN WILKINS (1250XL), JR SMITH (5201-5250), WADE (WP5-100), JOSAM (75000-S)

WM-1

WATER METER - DISC TYPE, ALL BRONZE CONSTRUCTION, 2.5" SIZE, TOP READING CUMULATIVE DIAL WITH FACE PLATE CAP AND REMOTE READOUT, AWWA COMPLIANT.

PROVIDE STRAINER, TEST PORT AND FULL SIZE BYPASS WITH LOCKABLE VALVE.

ACCEPTABLE MANUFACTURERS: NEPTUNE, BADGER, HERSEY

YCO-1

YARD CLEANOUT - ROUND, DURA-COATED CAST IRON, SIZE AS LISTED ON DRAWINGS, DOUBLE FLANGED HOUSING, HEAVY DUTY SECURED SCORIATED DURA-COATED CAST IRON COVER, LIFTING DEVICE, BRONZE CLEANOUT PLUG WITH GAS/WATER-TIGHT SEAL.

ACCEPTABLE MANUFACTURERS: ZURN (Z1474), SMITH (4261), WADE (W-8300), JOSAM (58680), WATTS (CO-300).

C:\Revit Local Files\MEP15_14.0872.00 - Fermi Lab - Far Detector_CENTRAL_wellsma.rvt

3/2/2015 5:20:24 PM

REV.	DATE	REVISIONS
5	03/02/15	ISSUED FOR 90% REVIEW
4	02/23/15	ISSUED FOR 90% COST ESTIMATE
3	01/26/15	ISSUED FOR 60% REVIEW
2	01/16/15	ISSUED FOR PRICING
1	12/23/14	SCHEMATIC DESIGN

KJWW ENGINEERING CONSULTANTS
The FUTURE. Built SMARTER.®
1100 WARRENVILLE ROAD, SUITE 400W
NAPERVILLE, ILLINOIS 60563
630.527.2320 FAX: 630.527.2321
www.kjww.com
PROJECT #:
Illinois Design Firm Registration #184-000973

KJWW ENGINEERING RESERVES PROPRIETARY RIGHTS, INCLUDING COPYRIGHTS, TO THIS DRAWING AND THE DATA SHOWN THEREON. SAID DRAWING AND/OR DATA ARE THE EXCLUSIVE PROPERTY OF KJWW ENGINEERING AND SHALL NOT BE USED OR REPRODUCED FOR ANY OTHER PROJECT WITHOUT THE EXPRESS WRITTEN APPROVAL AND PARTICIPATION OF KJWW ENGINEERING. © 2015 KJWW, P.C.

REFERENCE SCALE IN INCHES
0 1 2 3

	FERMI LAB	DATE
DESIGNED	P. MUELLER	3/2/2015
DRAWN	D. WILKINS	3/2/2015
CHECKED		
APPROVED		
SUBMITTED		

SCALE:

NOT FOR CONSTRUCTION

FERMI NATIONAL ACCELERATOR LABORATORY
UNITED STATES DEPARTMENT OF ENERGY

SBN FAR DETECTOR BUILDING
PLUMBING MATERIAL LIST

DRAWING NO. 6-7-93 P-10 REV. 5

02 MAR. 2015

CONTACT PERSONS

DESCRIPTION:	PERSON:
PROJECT MANAGER	JEFF OKE
MECHANICAL ENGINEER	PAUL MUELLER

ICW SYSTEM MODEL CALCULATIONS

TEST #1:
TEST DATE: 1/22/2015
LOCATION: 5 FT OUTSIDE BUILDING
TOTAL FLOW: 838 GPM
RESIDUAL PRESSURE: 58 PSI

TEST #2:
TEST DATE: 2/18/2015
LOCATION: 5 FT OUTSIDE BUILDING
TOTAL FLOW: 770 GPM
RESIDUAL PRESSURE: 60.5 PSI

SIZE OF MAIN: 6"

NOTES:
1. RESIDUAL PRESSURE DATA WAS PROVIDED BY PROJECT CIVIL ENGINEER. VALUES ARE BASED ON SYSTEM MODEL CALCULATIONS WHICH INCLUDE FUTURE CAMPUS SYSTEM IMPROVEMENTS WHICH ARE CURRENTLY BEING DESIGNED AND IMPLEMENTED. THE CURRENT CAMPUS SYSTEM WITHOUT IMPROVEMENTS HAS A VERY LIMITED AVAILABLE FLOW AND RESIDUAL PRESSURE. SUBCONTRACTOR SHALL COORDINATE FLOW TEST ONCE CAMPUS SYSTEM IMPROVEMENTS ARE COMPLETE TO VERIFY ACTUAL FLOW AND RESIDUAL PRESSURE AVAILABLE.
2. FIRE PROTECTION SYSTEM SHALL BE DESIGNED FOR A MAXIMUM RESIDUAL PRESSURE OF 58 PSI AT 5 FT OUTSIDE BUILDING.

GENERAL FIRE PROTECTION NOTES:

1. DRAWINGS SHOWING LOCATIONS OF EQUIPMENT, DUCTWORK, PIPING, ETC. ARE DIAGRAMMATIC AND MAY NOT ALWAYS REFLECT ACTUAL INSTALLATION CONDITIONS. DRAWINGS SHOW THE GENERAL ARRANGEMENT OF ALL DUCTWORK, PIPING, EQUIPMENT, ETC., AND MAY NOT INCLUDE ALL OFFSETS AND FITTINGS REQUIRED FOR COMPLETE INSTALLATION. THE DRAWINGS SHALL BE FOLLOWED AS CLOSELY AS ACTUAL BUILDING CONSTRUCTION AND THE WORK OF OTHERS WILL PERMIT.
2. DO NOT SCALE DRAWINGS. VERIFY ALL DIMENSIONS AND CLEARANCES FROM ARCHITECTURAL, STRUCTURAL, SUBMITTALS, AND OTHER APPROPRIATE DRAWINGS OR PHYSICALLY AT SITE. READ ALL SPECIFICATIONS. REVIEW ALL DRAWINGS, INCLUDING THOSE OF OTHER TRADES.
3. LAYOUT AND COORDINATE ALL WORK WITH ALL OTHER TRADES PRIOR TO INSTALLATION TO PROVIDE CLEARANCES REQUIRED FOR OPERATION, MAINTENANCE, CODE COMPLIANCE, AND TO VERIFY NON-INTERFERENCE WITH OTHER WORK. DO NOT FABRICATE PRIOR TO VERIFICATION OF NECESSARY CLEARANCES FOR ALL TRADES. BRING ANY INTERFERENCES OR CONFLICTS TO THE ATTENTION OF THE FERMILAB BEFORE PROCEEDING WITH ANY FABRICATION OR EQUIPMENT ORDERS.
4. SUBCONTRACTOR IS RESPONSIBLE FOR REVIEW OF SPACE REQUIREMENTS OF EQUIPMENT SPECIFIED OR SUBSTITUTED AND MAKING REASONABLE ACCOMMODATIONS IN LAYOUT AND POSITIONING TO PROVIDE PROPER ACCESS.
5. ANY CHANGES THAT ARE REQUIRED TO ELIMINATE CONFLICTS AND RESULT FROM A FAILURE TO COORDINATE SHALL BE MADE BY THE SUBCONTRACTOR WITHOUT ADDITIONAL COST OR EXPENSE TO THE FERMILAB.
6. CAULK ALL PIPE PENETRATIONS OF FULL HEIGHT NON FIRE RATED WALLS, PARTITIONS, FLOORS AND ROOF ASSEMBLIES. THIS IS ESSENTIAL TO PREVENT NOISE TRANSMISSION FROM ONE ROOM TO ANOTHER AND TO PROVIDE THE DESIRED NC LEVELS WITHIN THE ROOMS.
7. SUBCONTRACTOR IS RESPONSIBLE FOR ALL COST ASSOCIATED WITH ELECTRICAL CHANGES REQUIRED FOR EQUIPMENT DIFFERENT THAN THE BASIS OF DESIGN.
8. REFER TO ARCHITECTURAL REFLECTED CEILING PLAN FOR EXACT LOCATIONS OF ALL CEILING MOUNTED DEVICES.
9. THE MINIMUM DESIGN DENSITY SHALL BE BASED ON ORDINARY HAZARD GROUP 1.
10. THE MINIMUM SPRINKLER SPACING SHALL BE 130 SQUARE FEET AND 100 SQUARE FEET FOR EXPERIMENTAL, ASSEMBLY, AND GENERAL INDUSTRIAL HIGH BAY AREAS.
11. THE MINIMUM SPRINKLER K-FACTOR SHALL BE 8.0 FOR EXPERIMENTAL, ASSEMBLY, AND GENERAL INDUSTRIAL HIGH BAY AREAS.
12. RETURN BENDS (ARM-OVERS) SHALL BE PROVIDED ON ALL PENDENT SPRINKLERS.

FIRE PROTECTION SYMBOLS LIST

SYMBOL:	DESCRIPTION:
	NEW
	NEW CONNECTION
NO HATCH	ORDINARY GROUP 1
D	DRAIN LINE
ICW	INDUSTRIAL COOLING WATER
	PIPE CAP
	PIPE DOWN
	PIPE UP OR UP/DOWN
	PITCH PIPE IN DIRECTION
	DIRECTION OF FLOW IN PIPE
	SHUTOFF VALVE NORMALLY OPEN
	SHUTOFF VALVE NORMALLY CLOSED
	ANGLE VALVE
	BUTTERFLY VALVE WITH MONITOR SWITCH
	INSPECTOR TEST AND DRAIN VALVE
	OS&Y GATE VALVE WITH MONITOR SWITCH
P	PRESSURE SWITCH
	MONITOR SWITCH
	SPRINKLER - WALL MOUNTED
	SPRINKLER
	SPRINKLER
N.C.	NORMALLY CLOSED
N.O.	NORMALLY OPEN
C.C.	CIVIL SUBCONTRACTOR
E.C.	ELECTRICAL SUBCONTRACTOR
F.P.C.	FIRE PROTECTION SUBCONTRACTOR
G.C.	GENERAL SUBCONTRACTOR
M.C.	MECHANICAL SUBCONTRACTOR
P.C.	PLUMBING SUBCONTRACTOR

C:\Revit Local Files\MEP15_14.0872.00 - Fermi Lab - Far Detector_CENTRAL_wellsma.rvt

3/2/2015 5:19:11 PM

REV.	DATE	REVISIONS
5	03/02/15	ISSUED FOR 90% REVIEW
4	02/23/15	ISSUED FOR 90% COST ESTIMATE
3	01/26/15	ISSUED FOR 60% REVIEW
2	01/16/15	ISSUED FOR PRICING
1	12/23/14	SCHEMATIC DESIGN

KJWW ENGINEERING CONSULTANTS
The FUTURE Built SMARTER.®
1100 WARRENVILLE ROAD, SUITE 400W
NAPERVILLE, ILLINOIS 60563
630.527.2320 FAX: 630.527.2321
www.kjww.com
PROJECT #:
Illinois Design Firm Registration #184-000973

KJWW ENGINEERING RESERVES PROPRIETARY RIGHTS, INCLUDING COPYRIGHTS, TO THIS DRAWING AND THE DATA SHOWN THEREON. SAID DRAWING AND/OR DATA ARE THE EXCLUSIVE PROPERTY OF KJWW ENGINEERING AND SHALL NOT BE USED OR REPRODUCED FOR ANY OTHER PROJECT WITHOUT THE EXPRESS WRITTEN APPROVAL AND PARTICIPATION OF KJWW ENGINEERING. © 2015 KJWW, P.C.

REFERENCE SCALE IN INCHES
0 1 2 3

	FERMI LAB	DATE
DESIGNED	P. MUELLER	3/2/2015
DRAWN	D. WILKINS	3/2/2015
CHECKED		
APPROVED		
SUBMITTED		

SCALE:

NOT FOR CONSTRUCTION

FERMI NATIONAL ACCELERATOR LABORATORY
UNITED STATES DEPARTMENT OF ENERGY

SBN FAR DETECTOR BUILDING

FIRE PROTECTION COVER SHEET

DRAWING NO. 6-7-93 FP-1 REV. 5

02 MAR. 2015

GENERAL SHEET NOTES

1. INSTALLATION OF SPRINKLER HEADS SHALL CONFORM TO NFPA 13 REQUIREMENTS.
2. PROVIDE SPRINKLERS ABOVE AND BELOW STAIR LANDINGS PER NFPA 13.
3. SPRINKLERS SHALL BE INSTALLED UNDER FIXED OBSTRUCTIONS OVER 4'-0" WIDE INCLUDING BUT NOT LIMITED TO DUCTS AND OPEN GRATE FLOORING PER NFPA 13.

KEYNOTES (#)

1. SPRINKLERS AND SPRINKLER PIPING SHALL NOT CROSS OPENING IN GRADE LEVEL FLOOR ABOVE FAR DETECTOR. REFER TO ARCHITECTURAL DRAWINGS FOR MORE INFORMATION REGARDING OPENING, DETECTOR, CLEARANCES, AND OVERHEAD CRANE CLEARANCES.
2. AREA BELOW OPENING IN GRADE LEVEL FLOOR SHALL BE SERVED BY EXTENDED COVERAGE ORDINARY HAZARD HORIZONTAL SIDEWALL SPRINKLERS. SPRINKLERS SHALL BE LOCATED PER NFPA 13.
3. SPRINKLE BELOW OPEN GRATING MEZZANINE LEVEL WALKWAY. SPRINKLERS INSTALLED UNDER OPEN GRATINGS SHALL BE OF THE INTERMEDIATE LEVEL/RACK STORAGE TYPE OR OTHERWISE SHEILDED FROM DISCHARGE OF OVERHEAD SPRINKLERS PER NFPA 13.

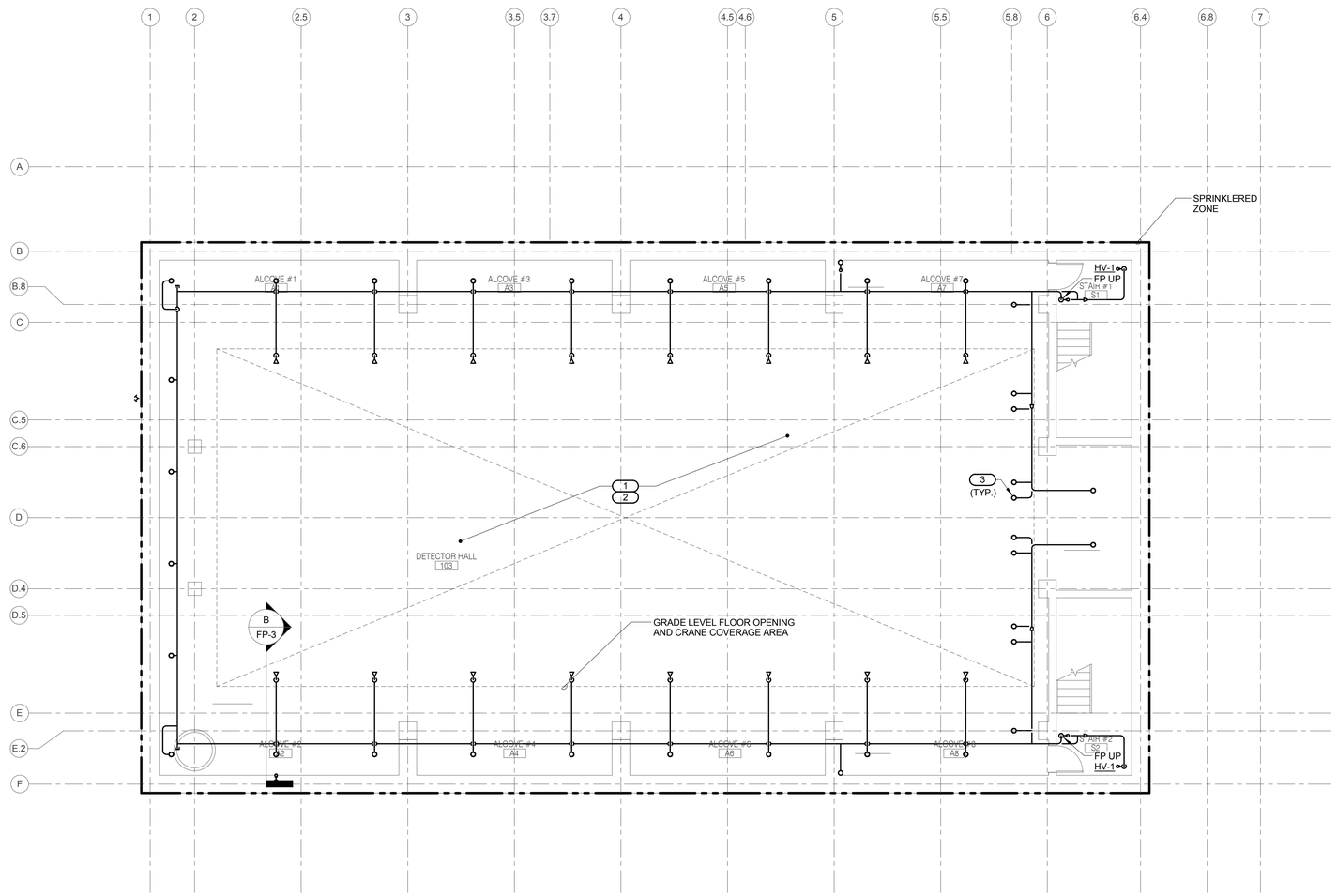

ENCLOSURE LEVEL FIRE PROTECTION PLAN

REV.	DATE	
5	03/02/15	ISSUED FOR 90% REVIEW
4	02/23/15	ISSUED FOR 90% COST ESTIMATE
3	01/26/15	ISSUED FOR 60% REVIEW
2	01/16/15	ISSUED FOR PRICING
1	12/23/14	SCHEMATIC DESIGN

REVISIONS

KJWW ENGINEERING CONSULTANTS
The FUTURE. Built SMARTER.®
1100 WARRENVILLE ROAD, SUITE 400W
NAPERVILLE, ILLINOIS 60563
630.527.2320 FAX: 630.527.2321
www.kjww.com
PROJECT #:
Illinois Design Firm Registration #184-000973

KJWW ENGINEERING RESERVES PROPRIETARY RIGHTS, INCLUDING COPYRIGHTS, TO THIS DRAWING AND THE DATA SHOWN THEREON. SAID DRAWING AND/OR DATA ARE THE EXCLUSIVE PROPERTY OF KJWW ENGINEERING AND SHALL NOT BE USED OR REPRODUCED FOR ANY OTHER PROJECT WITHOUT THE EXPRESS WRITTEN APPROVAL AND PARTICIPATION OF KJWW ENGINEERING. © 2015 KJWW, P.C.

REFERENCE SCALE IN INCHES: 0 1 2 3

	FERMI LAB	DATE
DESIGNED	P. MUELLER	3/2/2015
DRAWN	D. WILKINS	3/2/2015
CHECKED		
APPROVED		
SUBMITTED		

S W E PROJECT NORTH

SCALE: 1/8"=1'-0" 8 0 8 16 SCALE FEET

NOT FOR CONSTRUCTION

FERMI NATIONAL ACCELERATOR LABORATORY

UNITED STATES DEPARTMENT OF ENERGY

SBN FAR DETECTOR BUILDING

ENCLOSURE LEVEL FIRE PROTECTION PLAN

DRAWING NO. **6-7-93** **FP-2** REV. **5**

02 MAR. 2015

C:\Revit Local Files\MEP15_14.0872.00 - Fermi Lab - Far Detector_CENTRAL_wellsma.rvt

3/2/2015 5:19:13 PM

GENERAL SHEET NOTES

1. INSTALLATION OF SPRINKLER HEADS SHALL CONFORM TO NFPA 13 REQUIREMENTS.
2. PROVIDE SPRINKLERS ABOVE AND BELOW STAIR LANDINGS PER NFPA 13.
3. SPRINKLERS SHALL BE INSTALLED UNDER FIXED OBSTRUCTIONS OVER 4'-0" WIDE INCLUDING BUT NOT LIMITED TO DUCTS AND OPEN GRATE FLOORING PER NFPA 13.

KEYNOTES (#)

1. SPRINKLERS AND SPRINKLER PIPING SHALL NOT CROSS OPENING IN GRADE LEVEL FLOOR ABOVE FAR DETECTOR. REFER TO ARCHITECTURAL DRAWINGS FOR MORE INFORMATION REGARDING OPENING, DETECTOR, CLEARANCES, AND OVERHEAD CRANE CLEARANCES.
2. AREA BELOW OPENING IN GRADE LEVEL FLOOR SHALL BE SERVED BY EXTENDED COVERAGE ORDINARY HAZARD HORIZONTAL SIDEWALL SPRINKLERS. SPRINKLERS SHALL BE LOCATED PER NFPA 13.
3. ROUTE SPRINKLER MAIN TIGHT TO NORTH WALL.

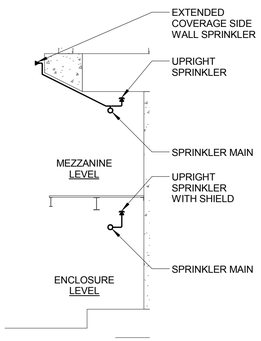

DETAIL "B"

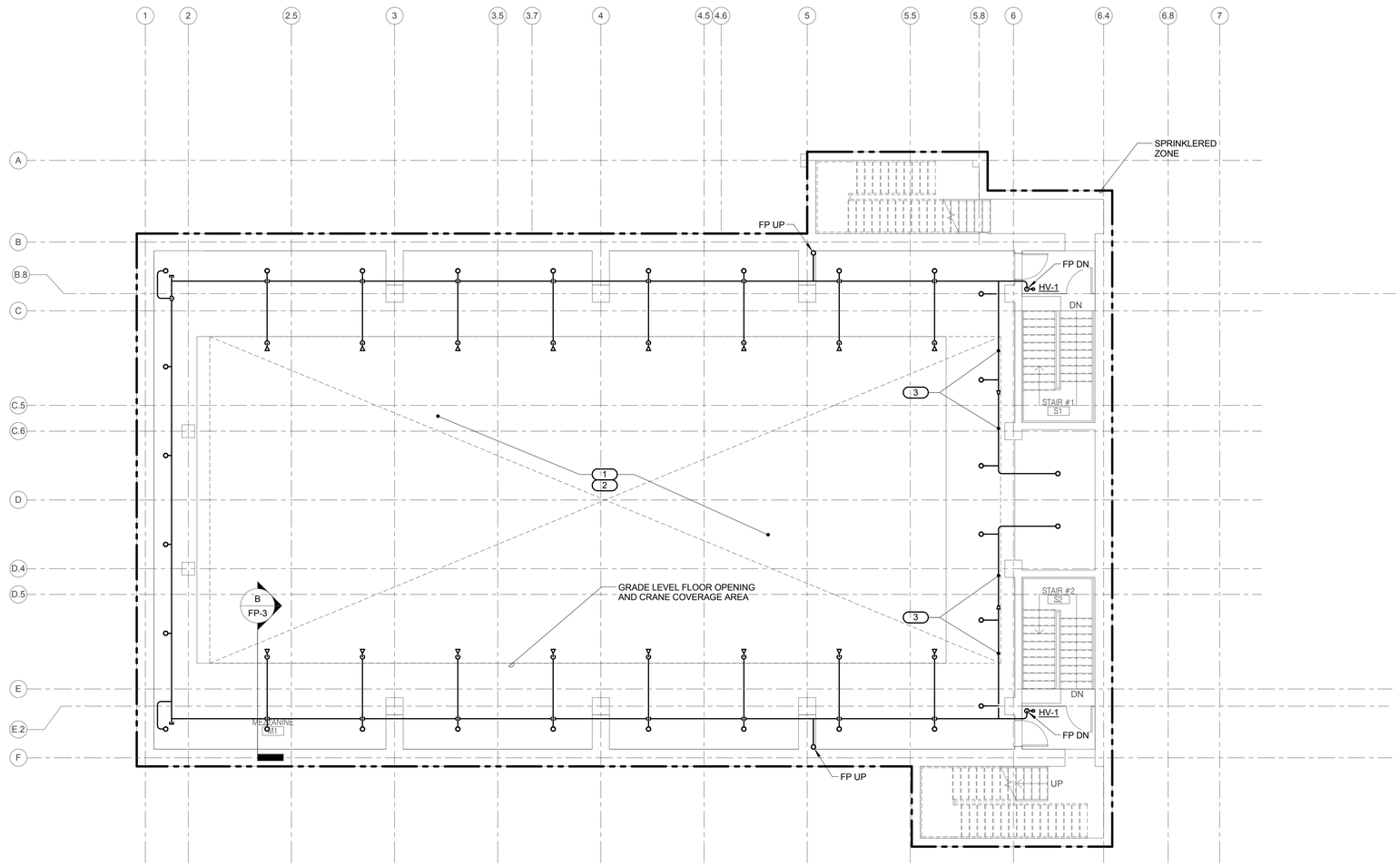

MEZZANINE LEVEL FIRE PROTECTION PLAN

REV.	DATE	REVISIONS
5	03/02/15	ISSUED FOR 90% REVIEW
4	02/23/15	ISSUED FOR 90% COST ESTIMATE
3	01/26/15	ISSUED FOR 60% REVIEW
2	01/16/15	ISSUED FOR PRICING
1	12/23/14	SCHEMATIC DESIGN

KJWW ENGINEERING CONSULTANTS
The FUTURE. Built SMARTER.®
1100 WARRENVILLE ROAD, SUITE 400W
NAPERVILLE, ILLINOIS 60563
630.527.2320 FAX: 630.527.2321
www.kjww.com
PROJECT #:
Illinois Design Firm Registration #184-000973

KJWW ENGINEERING RESERVES PROPRIETARY RIGHTS, INCLUDING COPYRIGHTS, TO THIS DRAWING AND THE DATA SHOWN THEREON. SAID DRAWING AND/OR DATA ARE THE EXCLUSIVE PROPERTY OF KJWW ENGINEERING AND SHALL NOT BE USED OR REPRODUCED FOR ANY OTHER PROJECT WITHOUT THE EXPRESS WRITTEN APPROVAL AND PARTICIPATION OF KJWW ENGINEERING. © 2015 KJWW, P.C.

REFERENCE SCALE IN INCHES: 0 1 2 3

	FERMI LAB	DATE
DESIGNED	P. MUELLER	3/2/2015
DRAWN	D. WILKINS	3/2/2015
CHECKED		
APPROVED		
SUBMITTED		

PROJECT NORTH (S, W, E)

SCALE: 1/8"=1'-0" (8 0 8 16 FEET)

NOT FOR CONSTRUCTION

FERMI NATIONAL ACCELERATOR LABORATORY

UNITED STATES DEPARTMENT OF ENERGY

SBN FAR DETECTOR BUILDING

MEZZANINE LEVEL FIRE PROTECTION PLAN

DRAWING NO. **6-7-93** **FP-3** REV. **5**

02 MAR. 2015

C:\Revit Local Files\MEP15_14.0872.00 - Fermi Lab - Far Detector_CENTRAL_wellsma.rvt

3/2/2015 5:19:15 PM

GENERAL SHEET NOTES

1. INSTALLATION OF SPRINKLER HEADS SHALL CONFORM TO NFPA 13 REQUIREMENTS.
2. PROVIDE SPRINKLERS ABOVE AND BELOW STAIR LANDINGS PER NFPA 13.
3. SPRINKLERS SHALL BE INSTALLED UNDER FIXED OBSTRUCTIONS OVER 4'-0" WIDE INCLUDING BUT NOT LIMITED TO DUCTS AND OVERHEAD DOORS PER NFPA 13.

KEYNOTES (#)

1. REFER TO ARCHITECTURAL DRAWINGS FOR MORE INFORMATION REGARDING OVERHEAD CRANE CLEARANCES AND SKYLIGHT LOCATIONS. SPRINKLERS AND SPRINKLER PIPING IN HIGH ROOF AREA SHALL NOT BE ROUTED BELOW SKYLIGHTS.
2. COORDINATE SPRINKLER LOCATIONS IN THIS AREA WITH FINAL ELECTRIC UNIT HEATER LOCATION.

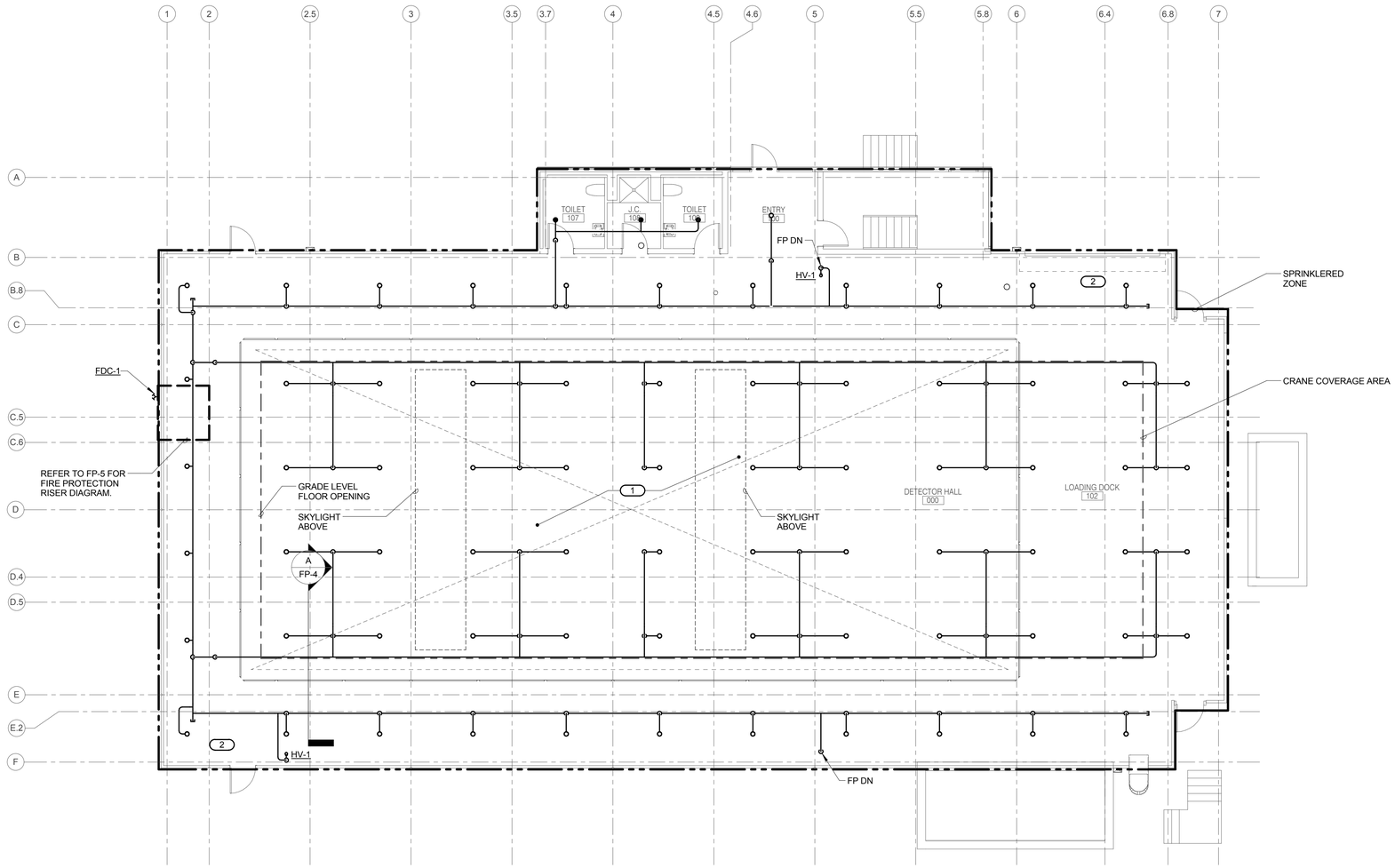

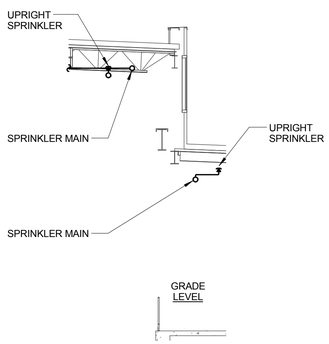

DETAIL "A"

GRADE LEVEL FIRE PROTECTION PLAN

REV.	DATE	REVISIONS
5	03/02/15	ISSUED FOR 90% REVIEW
4	02/23/15	ISSUED FOR 90% COST ESTIMATE
3	01/26/15	ISSUED FOR 60% REVIEW
2	01/16/15	ISSUED FOR PRICING
1	12/23/14	SCHEMATIC DESIGN

KJWW ENGINEERING CONSULTANTS
The FUTURE. Built SMARTER.®
1100 WARRENVILLE ROAD, SUITE 400W
NAPERVILLE, ILLINOIS 60563
630.527.2320 FAX: 630.527.2321
www.kjww.com
PROJECT #:
Illinois Design Firm Registration #184-000973

KJWW ENGINEERING RESERVES PROPRIETARY RIGHTS, INCLUDING COPYRIGHTS, TO THIS DRAWING AND THE DATA SHOWN THEREON. SAID DRAWING AND/OR DATA ARE THE EXCLUSIVE PROPERTY OF KJWW ENGINEERING AND SHALL NOT BE USED OR REPRODUCED FOR ANY OTHER PROJECT WITHOUT THE EXPRESS WRITTEN APPROVAL AND PARTICIPATION OF KJWW ENGINEERING. © 2015 KJWW, P.C.

REFERENCE SCALE IN INCHES: 0 1 2 3

	FERMI LAB	DATE
DESIGNED	P. MUELLER	3/2/2015
DRAWN	D. WILKINS	3/2/2015
CHECKED		
APPROVED		
SUBMITTED		

S W E PROJECT NORTH

SCALE: 1/8" = 1'-0" (8 0 8 16 FEET)

NOT FOR CONSTRUCTION

FERMI NATIONAL ACCELERATOR LABORATORY

UNITED STATES DEPARTMENT OF ENERGY

SBN FAR DETECTOR BUILDING

GRADE LEVEL FIRE PROTECTION PLAN

DRAWING NO. **6-7-93** **FP-4** REV. 5

02 MAR. 2015

C:\Revit Local Files\MEP15_14.0872.00 - Fermi Lab - Far Detector_CENTRAL_wellsma.rvt

3/2/2015 5:19:18 PM

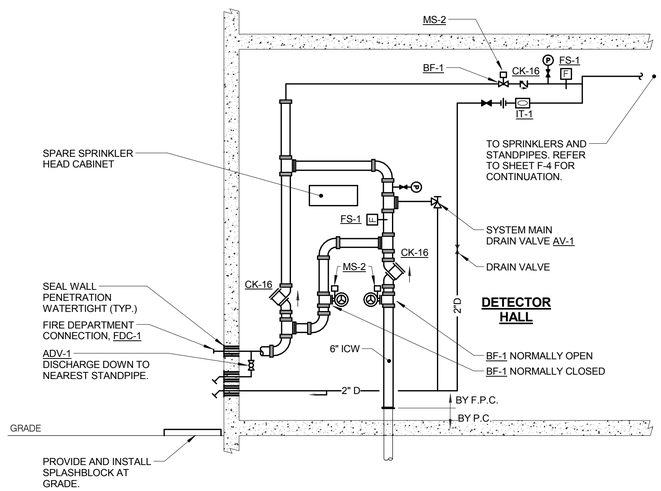

FIRE PROTECTION RISER DIAGRAM

NOTES:
1. SIZE ALL PIPING PER NFPA 13, INCLUDING THE SAFETY FACTOR STATED IN DOE-STD-1066-2012.

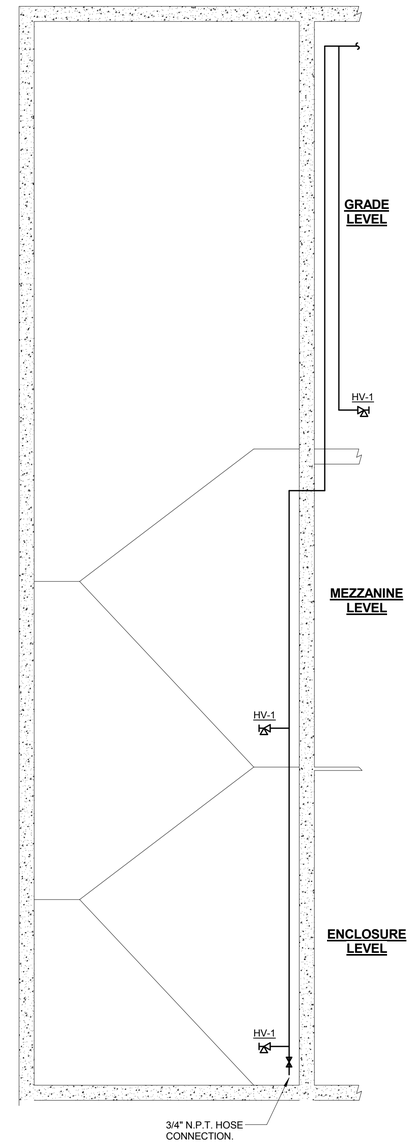

STAIRWELL STANDPIPES

NOTES:
1. REFER TO FLOOR PLAN DRAWINGS FOR EXACT LOCATIONS OF HOSE VALVES.

REV.	DATE	REVISIONS
5	03/02/15	ISSUED FOR 90% REVIEW
4	02/23/15	ISSUED FOR 90% COST ESTIMATE
3	01/26/15	ISSUED FOR 60% REVIEW
2	01/16/15	ISSUED FOR PRICING
1	12/23/14	SCHEMATIC DESIGN

KJWW ENGINEERING CONSULTANTS
The FUTURE. Built SMARTER.®
1100 WARRENVILLE ROAD, SUITE 400W
NAPERVILLE, ILLINOIS 60563
630.527.2320 FAX: 630.527.2321
www.kjww.com
PROJECT #:
Illinois Design Firm Registration #184-000973

KJWW ENGINEERING RESERVES PROPRIETARY RIGHTS, INCLUDING COPYRIGHTS, TO THIS DRAWING AND THE DATA SHOWN THEREON. SAID DRAWING AND/OR DATA ARE THE EXCLUSIVE PROPERTY OF KJWW ENGINEERING AND SHALL NOT BE USED OR REPRODUCED FOR ANY OTHER PROJECT WITHOUT THE EXPRESS WRITTEN APPROVAL AND PARTICIPATION OF KJWW ENGINEERING. © 2015 KJWW, P.C.

REFERENCE SCALE IN INCHES
0 1 2 3

FERMI LAB		DATE
DESIGNED	P. MUELLER	3/2/2015
DRAWN	D. WILKINS	3/2/2015
CHECKED		
APPROVED		
SUBMITTED		

SCALE:

NOT FOR CONSTRUCTION

FERMI NATIONAL ACCELERATOR LABORATORY
UNITED STATES DEPARTMENT OF ENERGY

SBN FAR DETECTOR BUILDING
FIRE PROTECTION RISER DIAGRAM

DRAWING NO. 6-7-93 FP-5 REV. 5

02 MAR. 2015

C:\Revit Local Files\MEP15_14.0872.00 - Fermi Lab - Far Detector_CENTRAL_wellsma.rvt
3/2/2015 5:19:19 PM

FIRE SPRINKLER USAGE SCHEDULE

AREA TYPE (NOTE 1 & 6)	AREA HAZARD (NOTE 7)	SPRINKLER					MANUFACTURER & MODEL	REMARKS
		SYMBOL (NOTES 4 & 5)	TYPE	RESPONSE	FINISH	TEMPERATURE °F		
ENTRY & TOILET ROOMS	SEE PLANS	SPR-4	CONCEALED	QUICK	WHITE	155	VIKING VK, RELIABLE G4A, TYCO RFII, VICTAULIC V3802	NOTES 3, 8, 9, 10
BUILDING	SEE PLANS	SPR-13	PENDENT	STANDARD	ROUGH BRASS	175	VIKING VK, RELIABLE F1, TYCO TY-B, VICTAULIC V2707	NOTES 3, 8, 9, 10
BUILDING	SEE PLANS	SPR-14	UPRIGHT	STANDARD	ROUGH BRASS	175	VIKING VK, RELIABLE F1, TYCO TY-B, VICTAULIC V2703	NOTES 3, 8, 9, 10
BELOW OPEN GRATE MEZZANINE FLOOR	SEE PLANS	SPR-15	UPRIGHT WITH WATER SHIELD	STANDARD	ROUGH BRASS	175	VIKING VK, RELIABLE F1, TYCO TY-B, VICTAULIC V2703	NOTES 3, 8, 9, 10
BUILDING	SEE PLANS	SPR-18	SIDEWALL	STANDARD	ROUGH BRASS	175	VIKING VK, RELIABLE F1, TYCO TY-B, VICTAULIC V2709	NOTES 3, 8, 9, 10
GRADE LEVEL FLOOR & ROOF OPENING	SEE PLANS	SPR-19	EXTENDED COVERAGE SIDEWALL	STANDARD	ROUGH BRASS	200	TYCO SW-24 ECOH	NOTES 3, 8, 9, 10

NOTES:

1. SEE FLOOR PLANS FOR ZONING REQUIREMENTS.
2. SPRINKLER SHALL HAVE COLOR CODED BULB THERMAL ELEMENT.
3. ALL SPRINKLERS SHALL BE UL LISTED.
4. SUBCONTRACTOR TO VERIFY SPRINKLER REQUIREMENTS BASED ON ACTUAL INSTALLATION, USAGE, ARCHITECTURAL CEILING PLAN AND NFPA 13 REQUIREMENTS.
5. SYMBOL IS PRIMARILY FOR INDENTIFYING SPRINKLERS IN SUBMITTALS. IT MAY OR MAY NOT BE FOUND ELSEWHERE ON THE DRAWINGS. SUBCONTRACTOR TO SUBMIT ALL SPRINKLER TYPES TO BE USED.
6. AREAS ARE GENERAL IN NATURE. SUBCONTRACTOR TO MATCH UNSCHEDULED AREAS TO SIMILAR SPACES.
7. THE MINIMUM DESIGN DENSITY SHALL BE BASED ON ORDINARY HAZARD GROUP 1.
8. THE MINIMUM SPRINKLER SPACING SHALL BE 130 SQUARE FEET AND 100 SQUARE FEET FOR EXPERIMENTAL, ASSEMBLY, AND GENERAL INDUSTRIAL HIGH BAY AREAS.
9. THE MINIMUM SPRINKLER K-FACTOR SHALL BE 8.0 FOR EXPERIMENTAL, ASSEMBLY, AND GENERAL INDUSTRIAL HIGH BAY AREAS.
10. RETURN BENDS (ARM-OVERS) SHALL BE PROVIDED ON ALL PENDENT SPRINKLERS.

FIRE PROTECTION MATERIAL LIST

THE SYMBOLS AND THE MATERIAL LIST ARE FOR THE CONVENIENCE OF THE SUBCONTRACTOR. SUBCONTRACTOR SHALL VERIFY QUANTITIES AND FURNISH ALL MATERIALS REQUIRED FOR FULLY OPERATIONAL SYSTEMS, WHETHER SPECIFIED OR NOT.

CATALOG NUMBERS SHALL NOT BE CONSIDERED COMPLETE, BUT ARE GIVEN AS AN AID TO THE SUBCONTRACTOR AND TO INDICATE THE QUALITY REQUIRED. SUBCONTRACTOR IS RESPONSIBLE FOR COMPLETE DESCRIPTION OF MATERIAL ON THESE DRAWINGS AND IN THE SPECIFICATIONS BEFORE ORDERING. THE DESCRIPTION OF THE MATERIAL TAKES PRECEDENCE OVER THE CATALOG NUMBER. THE FIRST LISTED MANUFACTURER IS THE BASIS OF DESIGN.

ADV-1

DESCRIPTION: AUTOMATIC DRIP VALVE, 175 PSI WP, BRASS BAR, STAINLESS STEEL SPRING AND RETAINING RING, CLOSING PRESSURE 13.5 PSI WITH INCREASING PRESSURE, OPENING PRESSURE 12.5 PSI WITH DECREASING PRESSURE, 1/2" NPT INLET AND 1/4" NPT DRAIN OUTLET.

MANUFACTURER & CATALOG NO.: VIKING B-1, TYCO AD-1.

AV-1

DESCRIPTION: ANGLE VALVE, 1/2" TO 2", 175 PSI, BRONZE BODY, INTEGRAL SEAT, SOFT DISC, HANDWHEEL, THREADED. UL.

MANUFACTURER & CATALOG NO.: UNITED 126S UL, NIBCO KT-67-UL / T-301-W, KENNEDY 98 SD, FPPI.

BF-1

DESCRIPTION: 2" TO 12" BUTTERFLY VALVE, 175 PSI WP, LUGGED OR GROOVED TYPE, IRON BODY, ALUMINUM BRONZE OR EPDM COATED IRON DISC, STAINLESS STEEL STEM AND SCREWS, EPDM SEAT, INTEGRAL MONITOR SWITCH, RATED FOR DEAD END SERVICE, UL/FM.

MANUFACTURER & CATALOG NO.: GEM 8000FP, TYCO BFV, KENNEDY 01, NIBCO LD3510-8, GD-4765-8N, VICTAULIC 705-W, KENNEDY

DESCRIPTION: 1" TO 2-1/2" SLOW CLOSE BUTTERFLY VALVE, 175 PSI WP, BRONZE BODY, TYPE 304 STAINLESS STEEL ELASTOMER COATED DISK, SLOW CLOSE MANUAL OPERATOR WITH INTEGRAL TAMPER SWITCH, GROOVED OR THREADED ENDS. UL/FM.

MANUFACTURER & CATALOG NO.: MILWAUKEE BB-SCS OR APPROVED EQUAL

CK-16

DESCRIPTION: 2-1/2" TO 12" SWING CHECK VALVE, 175 PSI WP, FLANGED OR GROOVED, IRON BODY, BRONZE MOUNTED, BRONZE SEAT RING AND RUBBER CLAPPER FACING, SWING TYPE, UL/FM.

MANUFACTURER & CATALOG NO.: VIKING D-1/G-1, TYCO CV-1F, KENNEDY 126A OR 426, ANVIL/STAR 78FP

DESCRIPTION: 1-1/2" TO 2" CHECK VALVE, 250 PSI WP, THREADED OR GROOVED, BRASS BODY, BRASS SEAT AND RUBBER CLAPPER FACING, SPRING LOADED IN-LINE TYPE, UL/FM.

MANUFACTURER & CATALOG NO.: VIKING L-1/K-1.

FIRE PROTECTION MATERIAL LIST (CONTINUED)

FDC-1

DESCRIPTION: EXPOSED FIRE DEPT. INLET CONNECTION, POLISHED CHROME PLATED TWO-WAY INLET BODY WITH DROP CLAPPERS, PIN LUG SWIVELS, PLUGS, CHAINS , STAINLESS STEEL "LOCKING STORZ" FDC CAPS WITH MATCHING THREADS AND CHROME FINISH, "LOCKING STORZ" QUICK CONNECT WITH A 22-1/4" DEGREE ELBOW ON THE EXTERIOR INLET PIPE TO THE "LOCKING STORZ" CONNECTION. GASKET SHALL BE REMOVED FROM THE "LOCKING STORZ" STORZ CAP. , POLISHED CHROME PLATED WALL PLATE LABELED "AUTO. SPR." 4" X 2-1/2" X 2-1/2". UL. THREADS TO MATCH FERMILAB FIRE DEPARTMENT.

SUBCONTRACTOR TO COORDINATE PURCHASE OF KNOX LOCKING CAP WITH FERMILAB FIRE DEPARTMENT.

MANUFACTURER & CATALOG NO.: POTTER-ROEMER 5750 SERIES, CROKER 6430 SERIES, GUARDIAN 6124, ELKHART 156.

FS-1

DESCRIPTION: FLOW SWITCH - VANE TYPE FOR USE ON WET PIPE SPRINKLER SYSTEM TO DETECT A MINIMUM FLOW OF 10 GPM. TWO SINGLE POLE DOUBLE THROW SWITCHES WITH PNEUMATIC RETARD-ADJUSTABLE FROM 0-90 SECONDS WITH AUTOMATIC RESET, TAMPER RESISTANT METAL HOUSING. UL/FM.

MANUFACTURER & CATALOG NO.: SYSTEM SENSOR WFD SERIES, POTTER ELECTRIC VSR-F.

HV-1

DESCRIPTION: 2-1/2" HOSE VALVE, ANGLE TYPE, CAST BRASS BODY AND TRIM, RISING STEM, CAP AND CHAIN, RED HAND WHEEL. HOSE THREADS TO MATCH LOCAL FIRE DEPARTMENT.

MANUFACTURER & CATALOG NO.: POTTER-ROEMER 4060, CROKER 5035, ELKHART U-25, KENNEDY 936.

IT-1

DESCRIPTION: 1" INSPECTOR'S TEST AND DRAIN VALVE WITH INTEGRAL SIGHT GLASS, BALL VALVE WITH INTEGRAL LABELED PLATE SHOWING OFF-TEST-DRAIN POSITIONS. FURNISHED WITH TEST ORIFICE GIVING FLOW EQUIVALENT TO ONE SPRINKLER OF A TYPE HAVING THE SMALLEST ORIFICE INSTALLED ON THE SYSTEM, UL.

MANUFACTURER & CATALOG NO.: TYCO F350, AGF MODEL 1000.

MS-2

DESCRIPTION: MONITOR SWITCH - ELECTRIC, TWO SINGLE POLE, DOUBLE THROW CONTACTS, CAST ALUMINUM HOUSING WITH CORROSION RESISTANT PARTS, UL/FM. VERIFY ELECTRICAL CHARACTERISTICS WITH ELECTRICAL SUBCONTRACTOR PRIOR TO PURCHASE.

MANUFACTURER & CATALOG NO.: POTTER ELECTRIC PCVS-2, SYSTEM SENSOR P1BV2.

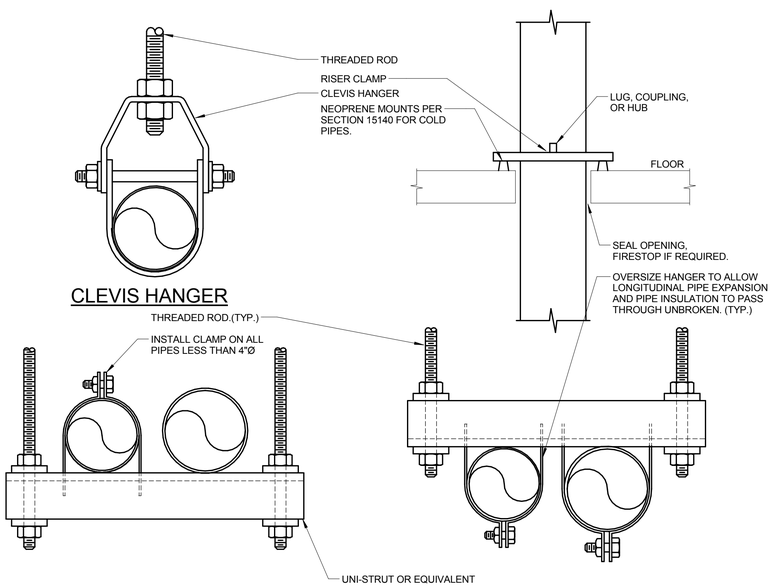

PIPE SUPPORT DETAIL

NOTES:

1. REFER TO SPECIFICATION SECTION SECTION 15140.

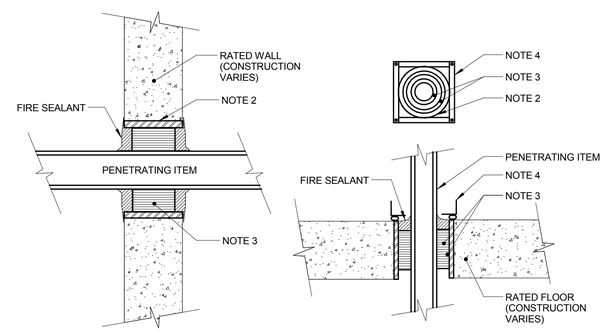

RATED FIRE BARRIER PENETRATION

NOTES:

1. THIS GENERAL DETAIL APPLIES TO ALL ITEMS PENETRATING FIRE RATED WALLS OR FLOORS. THE INTENT IS TO MAINTAIN THE FIRE RATING AND TO ALLOW LONGITUDINAL MOVEMENT. REFER TO SPECIFICATION SECTION 15080 FOR SELECTION OF THROUGH PENETRATION FIRE STOPPING.
2. SCHEDULE 5 PIPE SLEEVE EMBEDDED IN WALL OR FLOOR, OR SMOOTH CORE DRILL. EACH SUBCONTRACTOR FURNISHES SLEEVE TO G.C., COORDINATES SLEEVE LOCATIONS AND DEBURS SLEEVE. G.C. BUILDS SLEEVE INTO WALL OR FLOOR ALLOWING NO GAP AROUND SLEEVE. IF SLEEVE IS NOT PROVIDED WHEN WALL OR FLOOR IS BUILT, SUBCONTRACTOR SHALL INSTALL SLEEVE. SLEEVE SIZE SHALL ALLOW ANNULAR SPACE REQUIRED BY THE SELECTED FIRE STOP SYSTEM.
3. INSTALL BACKING MATERIAL, SUCH AS MINERAL WOOL SAFING, AS REQUIRED FOR FIRE STOP SYSTEM. INSTALL IN ACCORDANCE WITH FIRE STOP SYSTEM APPLICATION LISTING. SECURE TO WALL OR FLOOR TO ALLOW LONGITUDINAL MOVEMENT OF PENETRATING ITEM WITHOUT MOVEMENT OF FIRE BARRIER.
4. WATER-TIGHT WELDED 1"x1" 20 GAUGE MINIMUM GALVANIZED SHEET METAL ANGLE FRAME, BY SUBCONTRACTOR IN EQUIPMENT ROOMS FOR WATER STOP. PLACE A BEAD OF WATERPROOF SEALANT BETWEEN FLOOR AND BOTTOM OF ANGLE FRAME. SECURE TO FLOOR WITH MASONRY ANCHORS IN CORNERS AND ON 12" MAXIMUM CENTERS. MULTIPLE PENETRATING ITEMS MAY BE ENCLOSED IN ONE FRAME.

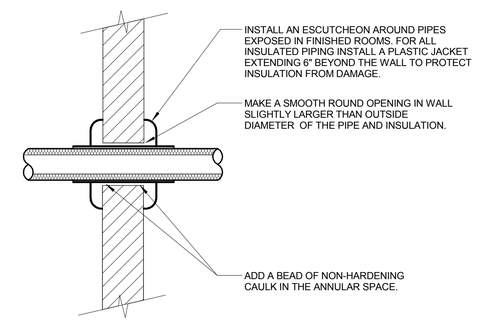

PIPE THROUGH NON-FIRE RATED WALL

NOTES:

1. THIS DETAIL APPLIES TO ALL PIPES. THE INTENTION IS TO CONTINUE THE INSULATION AND VAPOR BARRIER THROUGH ALL PENETRATIONS. PERMIT THERMAL EXPANSION WITHOUT DAMAGING INSULATION, AND TO SEAL AIRTIGHT AROUND INSULATED AND UNINSULATED PIPES FOR NOISE TRANSMISSION CONTROL.
2. FLOOR OPENINGS ARE SIMILAR SEE SPECIFICATION SECTION 15140 FOR DIFFERENCES BETWEEN FLOOR AND WALL PENETRATIONS.
3. SEE SPECIFICATION SECTIONS 15080 AND 15140 FOR ADDITIONAL INFORMATION.

REV.	DATE	REVISIONS
5	03/02/15	ISSUED FOR 90% REVIEW
4	02/23/15	ISSUED FOR 90% COST ESTIMATE
3	01/26/15	ISSUED FOR 60% REVIEW
2	01/16/15	ISSUED FOR PRICING
1	12/23/14	SCHEMATIC DESIGN

KJWW ENGINEERING CONSULTANTS
The FUTURE. Built SMARTER.®
1100 WARRENVILLE ROAD, SUITE 400W
NAPERVILLE, ILLINOIS 60563
630.527.2320 FAX: 630.527.2321
www.kjww.com
PROJECT #:
Illinois Design Firm Registration #184-000973

KJWW ENGINEERING RESERVES PROPRIETARY RIGHTS, INCLUDING COPYRIGHTS, TO THIS DRAWING AND THE DATA SHOWN THEREON. SAID DRAWING AND/OR DATA ARE THE EXCLUSIVE PROPERTY OF KJWW ENGINEERING AND SHALL NOT BE USED OR REPRODUCED FOR ANY OTHER PROJECT WITHOUT THE EXPRESS WRITTEN APPROVAL AND PARTICIPATION OF KJWW ENGINEERING. © 2015 KJWW, P.C.

REFERENCE SCALE IN INCHES
0 1 2 3

FERMI LAB		DATE
DESIGNED	P. MUELLER	3/2/2015
DRAWN	D. WILKINS	3/2/2015
CHECKED		
APPROVED		
SUBMITTED		

SCALE:

NOT FOR CONSTRUCTION

FERMI NATIONAL ACCELERATOR LABORATORY

UNITED STATES DEPARTMENT OF ENERGY

SBN FAR DETECTOR BUILDING

FIRE PROTECTION DETAILS & SCHEDULES

DRAWING NO. 6-7-93 FP-6 REV. 5

02 MAR. 2015

C:\Revit Local Files\MEP15_14.0872.00 - Fermi Lab - Far Detector_CENTRAL_wellsma.rvt

3/2/2015 5:19:19 PM

ONE LINE DIAGRAM NOTES

1. AIC RATINGS LISTED FOR EQUIPMENT ARE MINIMUM REQUIREMENTS FOR BUS BRACING AND DEVICE RATING. ALL EQUIPMENT SHALL BE FULLY RATED UNLESS SPECIFICALLY NOTED AS SERIES RATED.
2. INDICATES DIRECT CONNECTION OF GROUND CONDUCTOR TO GROUND BUS. SUBSCRIPT "I" INDICATES DIRECT CONNECTION OF ISOLATED GROUND CONDUCTOR TO ISOLATED GROUND BUS.
3. INDICATES O.Z. GEDNEY OR EQUAL GROUND BUSHING BONDED TO GROUND BUS WITH CONDUCTOR SIZED TO MAXIMUM FEEDER GROUND CAPACITY.
4. INDICATES OVERLOADS SIZED PER MOTOR NAMEPLATE FULL LOAD AMPERES.
5. INDICATES STARTER NEMA SIZE.
6. AF INDICATES MOLDED/INSULATED CASE BREAKER FRAME SIZE, FOR ADJUSTABLE TRIP BREAKERS.
7. AT INDICATES MOLDED/INSULATED CASE BREAKER TRIP UNIT RATING, FOR ADJUSTABLE TRIP BREAKERS.
8. [LSIG] INDICATES FEATURES PROVIDED WITH SOLID STATE CIRCUIT BREAKER. [LONG TIME (w/DELAY), SHORT TIME (w/DELAY), INSTANTANEOUS, GROUND FAULT].
9. CONDUCTOR AND CONDUIT SIZES ON THE LINE AND LOAD SIDES OF ALL NON-FUSIBLE DISCONNECT SWITCHES SHALL BE IDENTICAL UNLESS NOTED OTHERWISE.
10. DPM INDICATES DIGITAL POWER MONITOR.
11. INDICATES CURRENT TRANSFORMER, SIZE AS SPECIFIED.

ABBREVIATION KEY

ABBR:	DESCRIPTION:
AFF	ABOVE FINISHED FLOOR
BFC	BELOW FINISHED CEILING
C	CONDUIT
J-BOX	JUNCTION BOX
SIM	SIMULAR
TYP	TYPICAL
+#	MOUNTING HEIGHT ABOVE FINISHED FLOOR
EF-#	ENTRANCE FACILITY
HC-#	HORIZONTAL CROSS-CONNECT
IC-#	INTERMEDIATE CROSS-CONNECT
MC-#	MAIN CROSS-CONNECT
TR-#	TELECOMMUNICATIONS ROOM
A.C.	ASBESTOS ABATEMENT CONTRACTOR
A.T.C.	AUTOMATIC TEMPERATURE CONTROL CONTRACTOR
A.V.C.	AUDIO/VISUAL CONTRACTOR
C.C.	CIVIL CONTRACTOR
E.C.	ELECTRICAL CONTRACTOR
F.P.C.	FIRE PROTECTION CONTRACTOR
G.C.	GENERAL CONTRACTOR
H.C.	HEATING CONTRACTOR
M.C.	MECHANICAL CONTRACTOR
N.C.C.	NURSE CALL CONTRACTOR
P.C.	PLUMBING CONTRACTOR
S.C.	SECURITYCONTRACTOR
T.C.	TECHNOLOGY CONTRACTOR
T.C.C.	TEMPERATURE CONTROL CONTRACTOR
V.C.	VENTILATION CONTRACTOR

ELECTRICAL GENERAL NOTES

1. ##-#### INDICATES ELECTRICAL EQUIPMENT DEFINED IN ELECTRICAL SCHEDULES OR SPECIFICATION. REFER TO DRAWINGS CONTAINING ELECTRICAL SCHEDULES. PERMANENT NAMEPLATE SHALL MATCH FINAL EQUIPMENT NOMENCLATURE, NOT ELECTRICAL EQUIPMENT TAG NAME, REFER TO SPECIFICATIONS.
2. "NL" INDICATES LUMINAIRE IS UNSWITCHED FOR NIGHT LIGHT.
3. SHADED LUMINAIRE OR DEVICE INDICATES LUMINAIRE OR DEVICE IS CONNECTED TO AN EMERGENCY CIRCUIT.
4. SC-XXX-X INDICATES GENERAL TECHNOLOGY EQUIPMENT SCHEDULE ITEM LABELED AS "EQUIPMENT LIST ABBREVIATION"
5. REFER TO GENERAL TECHNOLOGY EQUIPMENT SCHEDULE AND SPECIFICATIONS FOR FULL DESCRIPTIONS AND MANUFACTURERS OF ALL TECHNOLOGY DEVICES.

LUMINAIRE KEY:

LUMINAIRE
F1 = FIXTURE TAG
1 = CIRCUIT NUMBER
a = SWITCH NUMBER
NL = SUBSCRIPT (IF APPLICABLE)

*IF LABEL IS ORIENTED HORIZONTALLY A SLASH WILL SEPARATE THIS INFORMATION.
EX: F1 / 1 / A / NL

DEVICE KEY:

DEVICE
A = MOUNTING (IF APPLICABLE)
1 = CIRCUIT NUMBER

*IF LABEL IS ORIENTED HORIZONTALLY A SLASH WILL SEPARATE THIS INFORMATION. EX: A / 1

ELECTRICAL MOUNTING SUBSCRIPT KEY:
A MOUNT ABOVE COUNTER (+6" TO CENTERLINE ABOVE COUNTER OR BACKSPLASH)
L MOUNT IN CASEWORK
H MOUNT DEVICE IN A HORIZONTAL ORIENTATION

TELECOM ROOM ABBREVIATION KEY:
HC-# HORIZONTAL CROSS-CONNECT

A SLASH IS USED BETWEEN TWO SUBSCRIPTS e.g.: A/H
REFER TO SPECIFICATIONS FOR FULL DESCRIPTIONS AND MANUFACTURERS OF ALL DEVICES.

LINE TYPE KEY:
NEW WORK BY SUB-CONTRACTOR (DARK SOLID LINE)
NEW WORK UNDERFLOOR OR UNDERGROUND BY SUB-CONTRACTOR (DARK LONG DASHED LINE)
NEW WORK BY OTHERS AND/OR EXISTING TO REMAIN (LIGHT SOLID LINE)

ELECTRICAL INSTALLATION NOTES

1. THE COMPLETE INSTALLATION SHALL BE IN ACCORDANCE WITH THE ADA STANDARDS FOR ACCESSIBLE DESIGN. REFER TO THE ADA GUIDELINES FOR ALL CONFIGURATIONS DETAIL ON THIS PAGE FOR ADDITIONAL INFORMATION.
2. CIRCUIT NUMBERS ARE SHOWN FOR CIRCUIT IDENTIFICATION. CIRCUITING SHALL AGREE WITH NUMBERING ON THE PANEL PROVIDED. COMMON NEUTRALS MAY NOT BE USED FOR BRANCH CIRCUITS. BALANCE THE LOAD ON PANEL AS EVENLY AS POSSIBLE BETWEEN EACH PHASE.
3. FLUSH MOUNT ALL TOGGLE SWITCHES AT +42" FROM FLOOR (CENTERLINE DIMENSION), EXCEPT WHERE OTHERWISE NOTED. TOGGLE SWITCHES MAY BE SURFACE MOUNTED WHEN CONDUIT IS SPECIFIED EXPOSED.
4. MOUNT ALL DUPLEX RECEPTACLES AND TELECOMMUNICATION OUTLETS AT +18" FROM FLOOR (CENTERLINE DIMENSION), EXCEPT WHERE OTHERWISE NOTED. RECEPTACLES AND OUTLETS MAY BE SURFACE MOUNTED WHEN CONDUIT IS SPECIFIED EXPOSED.
5. ALL MATERIALS USED TO SEAL PENETRATIONS OF FIRE RATED WALLS AND FLOORS SHALL BE TESTED AND CERTIFIED AS A SYSTEM PER ASTM E814 STANDARDS FOR FIRE TESTS OF THROUGH-PENETRATION FIRESTOPS. REFER TO [27 05 03 AND 28 05 03] [DIVISION 7] [26 05 03] FOR ADDITIONAL INFORMATION AND REQUIREMENTS SPECIFIC TO FIRESTOPPING.
6. MOUNT ALL FIRE ALARM PULL STATIONS AT +42" FROM FLOOR (CENTERLINE DIMENSION) EXCEPT WHERE OTHERWISE NOTED.
7. INSTALL ALL WALL MOUNTED FIRE ALARM NOTIFICATION DEVICES AT 90" ABOVE FINISHED FLOOR OR 6" BELOW THE CEILING, WHICHEVER IS LOWER, EXCEPT WHERE OTHERWISE NOTED. HEIGHT SHALL BE MEASURED TO THE TOP OF THE DEVICE.
8. SUB-CONTRACTOR SHALL COORDINATE THE LOCATION OF ALL DETECTORS AND/OR SPEAKERS WITH LUMINAIRES, SPRINKLER, AND CEILING DIFFUSERS.
9. SUB-CONTRACTOR SHALL VERIFY ALL EQUIPMENT LOCATIONS WITH ARCHITECTURAL PLANS, ELEVATIONS, AND REVIEWED SHOP DRAWINGS. PRIOR TO MAKING THE ACTUAL ELECTRICAL INSTALLATION, THIS SUB-CONTRACTOR SHALL ADJUST RECEPTACLES, OUTLETS, OR CONNECTION LOCATIONS TO ACCOMMODATE EQUIPMENT.
10. ELECTRICAL AND TELECOMMUNICATIONS EQUIPMENT SHALL BE MOUNTED TO AVOID IMPEDANCE OF, OPERATION OF, AND/OR ACCESS TO ELECTRICAL AND MECHANICAL EQUIPMENT. ALL MOUNTING OF ELECTRICAL AND TELECOMMUNICATIONS EQUIPMENT, ON EQUIPMENT SUPPLIED BY ANOTHER SUB-CONTRACTOR, SHALL BE APPROVED IN ADVANCE BY THE OTHER SUB-CONTRACTOR.
11. SUB-CONTRACTOR SHALL BE RESPONSIBLE FOR ALL OPENINGS REQUIRED IN WALLS. ALL OPENINGS SHALL BE REPAIRED TO MATCH EXISTING BY A QUALIFIED SUB-CONTRACTOR AT THE EXPENSE OF THIS SUB-CONTRACTOR. ALL CONDUITS THROUGH WALLS SHALL BE GROUTED OR SEALED INTO OPENINGS.
12. ALL WELDING SHALL BE ACCORDING TO AMERICAN WELDING SOCIETY STANDARDS. SUB-CONTRACTOR SHALL FURNISH TO THE FERMILAB CERTIFICATES QUALIFYING EACH WELDER, PRIOR TO START OF WORK. THE FERMILAB RESERVES THE RIGHT TO REQUIRE QUALIFYING DEMONSTRATION, AT THE SUB-CONTRACTOR'S EXPENSE, OF ANY WELDERS ASSIGNED TO THE JOB.
13. FEEDER CONNECTION TO BRANCH PANELS AND CONNECTIONS TO TRANSFORMERS PRIMARY AND SECONDARY SHALL BE IN LIQUID TIGHT FLEXIBLE CONDUIT.
14. FIRESTOPPING REFERS TO THE ITEMS SPECIFICALLY ADDRESSED IN DIVISION 16 DOCUMENTS. REFER TO THE INDIVIDUAL SPECIFICATION SECTIONS FOR INFORMATION SPECIFIC TO FIRESTOPPING.
15. ALL "LADDER RACK" AND "CABLE TRAY" SIZES ARE AS DEFINED ON THE DRAWINGS. REFER TO SPECIFICATIONS SECTION 17110 FOR APPROVED MANUFACTURERS AND INSTALLATION REQUIREMENTS.

TECHNOLOGY SYMBOL LIST

SYMBOL:	EQUIPMENT LIST ABBREVIATION:	DESCRIPTION:	NOTE:
"WIDTH" X "HEIGHT"		LADDER RACK	
DIAMETERø C		CONDUIT	
		CONDUIT DOWN	
		CONDUIT UP OR UP/DOWN	

GENERAL NOTES:

1. ALL SYMBOLS AND ABBREVIATIONS REFER TO ELECTRICAL SHEETS ONLY AS DEFINED ON THE SHEET INDEX. REFER TO THE ELECTRICAL GENERAL NOTES FOR ADDITIONAL INFORMATION.
2. ALL SYMBOLS LISTED ABOVE ARE FOR REFERENCE ONLY. REFER TO PLANS AND LINE TYPES KEY FOR NEW, EXISTING TO REMAIN AND TO BE REMOVED ITEMS FOR ADDITIONAL INFORMATION.

TELECOM ROOM REFERENCES

TELECOM ROOM	DETAIL / SHEET REFERENCE	FLOOR PLAN REFERENCE	ARCH ROOM NUMBER
HC-1	1/E-13	E-5	

REV.	DATE	REVISIONS
5	03/02/15	ISSUED FOR 90% REVIEW
4	02/23/15	ISSUED FOR 90% COST ESTIMATE
3	01/26/15	ISSUED FOR 60% REVIEW
2	01/16/15	ISSUED FOR PRICING
1	12/23/14	SCHEMATIC DESIGN

KJWW ENGINEERING CONSULTANTS
The FUTURE. Built SMARTER.®
1100 WARRENVILLE ROAD, SUITE 400W
NAPERVILLE, ILLINOIS 60563
630.527.2320 FAX: 630.527.2321
www.kjww.com
PROJECT #:
Illinois Design Firm Registration #184-000973

KJWW ENGINEERING RESERVES PROPRIETARY RIGHTS, INCLUDING COPYRIGHTS, TO THIS DRAWING AND THE DATA SHOWN THEREON. SAID DRAWING AND/OR DATA ARE THE EXCLUSIVE PROPERTY OF KJWW ENGINEERING AND SHALL NOT BE USED OR REPRODUCED FOR ANY OTHER PROJECT WITHOUT THE EXPRESS WRITTEN APPROVAL AND PARTICIPATION OF KJWW ENGINEERING. © 2015 KJWW, P.C.

REFERENCE SCALE IN INCHES
0 1 2 3

	FERMI LAB	DATE
DESIGNED	T. BALA	3/2/2015
DRAWN	M. WELLS	3/2/2015
CHECKED		
APPROVED		
SUBMITTED		

SCALE:

NOT FOR CONSTRUCTION

FERMI NATIONAL ACCELERATOR LABORATORY
UNITED STATES DEPARTMENT OF ENERGY

SBN FAR DETECTOR BUILDING
ELECTRICAL COVER SHEET

DRAWING NO. 6-7-93 E-1 REV. 5

02 MAR. 2015

C:\Revit Local Files\MEP15_14.0872.00 - Fermi Lab - Far Detector_CENTRAL_wellsma.rvt

3/2/2015 5:17:44 PM

GENERAL SHEET NOTES

1. REFER TO SHEET E-1 FOR GENERAL ELECTRICAL NOTES AND ELECTRICAL INSTALLATION NOTES.
2. REFER TO SHEET E-10 AND E-11 FOR ELECTRICAL ONE LINE DIAGRAMS.
3. REFER TO SHEET E-16 THROUGH E-18 FOR PANEL SCHEDULES.
4. REFER TO SHEET E-21 FOR GENERAL ELECTRICAL EQUIPMENT SCHEDULE.

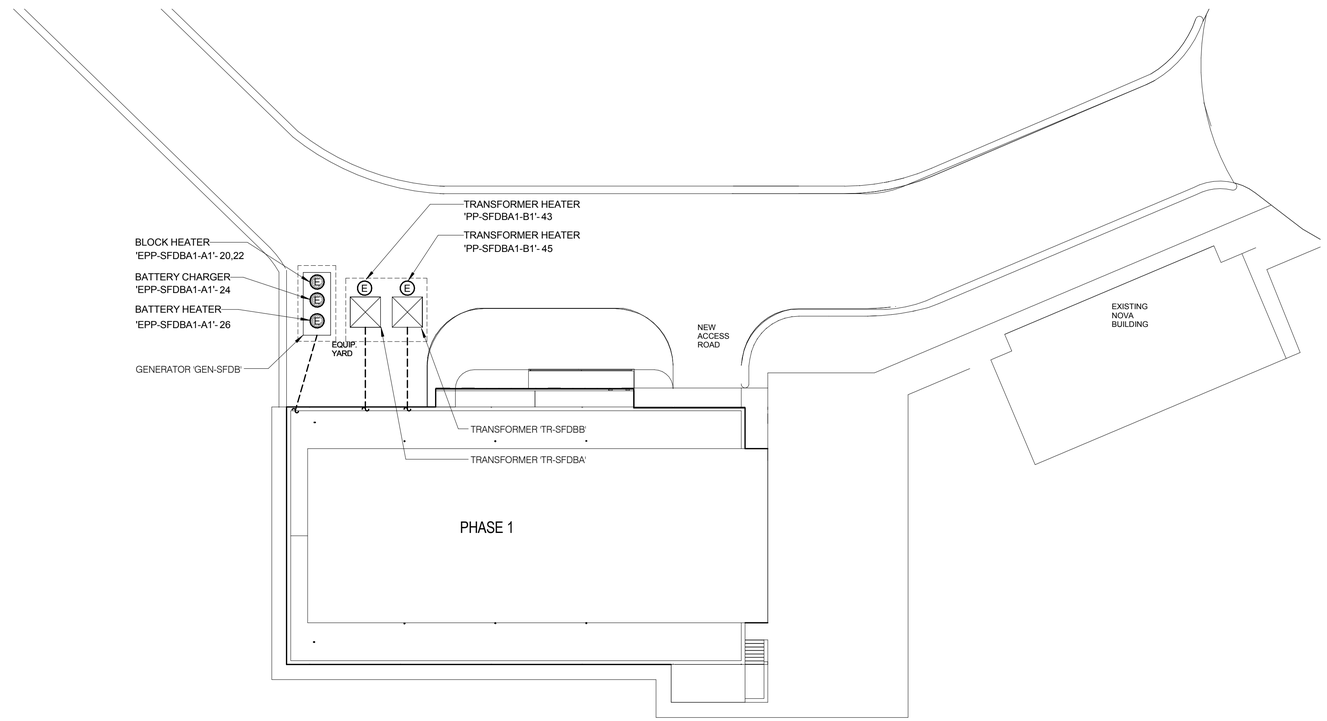

ELECTRICAL SITE PLAN

C:\Revit Local Files\MEP15_14.0872.00 - Fermi Lab - Far Detector_CENTRAL_wellsma.rvt

3/2/2015 5:17:44 PM

REV.	DATE	REVISIONS
5	03/02/15	ISSUED FOR 90% REVIEW
4	02/23/15	ISSUED FOR 90% COST ESTIMATE
3	01/26/15	ISSUED FOR 60% REVIEW
2	01/16/15	ISSUED FOR PRICING
1	12/23/14	SCHEMATIC DESIGN

KJWW ENGINEERING CONSULTANTS
The FUTURE Built SMARTER.®
1100 WARRENVILLE ROAD, SUITE 400W
NAPERVILLE, ILLINOIS 60563
630.527.2320 FAX: 630.527.2321
www.kjww.com
PROJECT #:
Illinois Design Firm Registration #184-000973

KJWW ENGINEERING RESERVES PROPRIETARY RIGHTS, INCLUDING COPYRIGHTS, TO THIS DRAWING AND THE DATA SHOWN THEREON. SAID DRAWING AND/OR DATA ARE THE EXCLUSIVE PROPERTY OF KJWW ENGINEERING AND SHALL NOT BE USED OR REPRODUCED FOR ANY OTHER PROJECT WITHOUT THE EXPRESS WRITTEN APPROVAL AND PARTICIPATION OF KJWW ENGINEERING. © 2015 KJWW, P.C.

REFERENCE SCALE IN INCHES: 0 1 2 3

	FERMI LAB	DATE
DESIGNED	T. BALA	3/2/2015
DRAWN	M. WELLS	3/2/2015
CHECKED		
APPROVED		
SUBMITTED		

S W E PROJECT NORTH

SCALE: 1"=20'-0"

20 0 20 40 SCALE FEET

NOT FOR CONSTRUCTION

FERMI NATIONAL ACCELERATOR LABORATORY

UNITED STATES DEPARTMENT OF ENERGY

SBN FAR DETECTOR BUILDING

ELECTRICAL SITE PLAN

DRAWING NO. 6-7-93 E-2 REV. 5

02 MAR. 2015

GENERAL SHEET NOTES

1. REFER TO SHEET E-1 FOR GENERAL ELECTRICAL NOTES AND ELECTRICAL INSTALLATION NOTES.
2. REFER TO SHEET E-21 FOR GENERAL ELECTRICAL EQUIPMENT SCHEDULE.

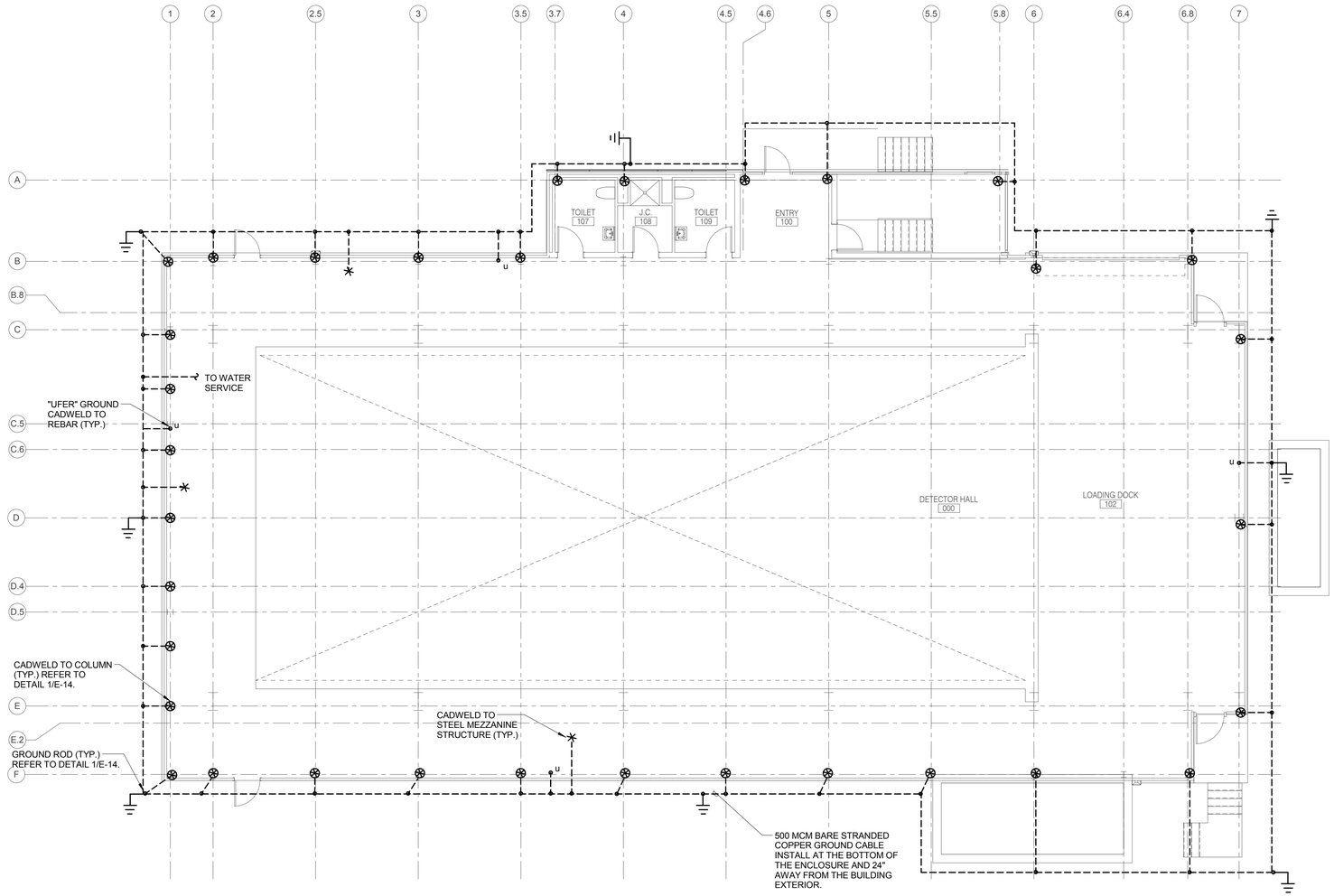

BUILDING GROUNDING PLAN

C:\Revit Local Files\MEP15_14.0872.00 - Fermi Lab - Far Detector_CENTRAL_wellsma.rvt

3/2/2015 5:17:45 PM

REV.	DATE	REVISIONS
5	03/02/15	ISSUED FOR 90% REVIEW
4	02/23/15	ISSUED FOR 90% COST ESTIMATE
3	01/26/15	ISSUED FOR 60% REVIEW
2	01/16/15	ISSUED FOR PRICING
1	12/23/14	SCHEMATIC DESIGN

KJWW ENGINEERING CONSULTANTS
The FUTURE. Built SMARTER.®
1100 WARRENVILLE ROAD, SUITE 400W
NAPERVILLE, ILLINOIS 60563
630.527.2320 FAX: 630.527.2321
www.kjww.com
PROJECT #:
Illinois Design Firm Registration #184-000973

KJWW ENGINEERING RESERVES PROPRIETARY RIGHTS, INCLUDING COPYRIGHTS, TO THIS DRAWING AND THE DATA SHOWN THEREON. SAID DRAWING AND/OR DATA ARE THE EXCLUSIVE PROPERTY OF KJWW ENGINEERING AND SHALL NOT BE USED OR REPRODUCED FOR ANY OTHER PROJECT WITHOUT THE EXPRESS WRITTEN APPROVAL AND PARTICIPATION OF KJWW ENGINEERING. © 2015 KJWW, P.C.

REFERENCE SCALE IN INCHES
0 1 2 3

	FERMI LAB	DATE
DESIGNED	T. BALA	3/2/2015
DRAWN	M. WELLS	3/2/2015
CHECKED		
APPROVED		
SUBMITTED		

S W E PROJECT NORTH

SCALE:
1/8"=1'-0"
8 0 8 16
SCALE FEET

NOT FOR CONSTRUCTION

FERMI NATIONAL ACCELERATOR LABORATORY
UNITED STATES DEPARTMENT OF ENERGY

SBN FAR DETECTOR BUILDING
BUILDING GROUNDING PLAN

DRAWING NO. **6-7-93** **E-3** REV. **5**

02 MAR. 2015

GENERAL SHEET NOTES

1. REFER TO SHEET E-1 FOR GENERAL ELECTRICAL NOTES AND ELECTRICAL INSTALLATION NOTES.
2. REFER TO SHEET E-16 THROUGH E-18 FOR PANEL SCHEDULES.
3. REFER TO SHEET E-21 FOR GENERAL ELECTRICAL EQUIPMENT SCHEDULE.
4. REFER TO SHEET E-20 FOR DISCONNECT AND STARTER SCHEDULE, VARIABLE FREQUENCY DRIVE SCHEDULE, TRANSFORMER SCHEDULE AND TRANSFER SWITCH SCHEDULE.
5. REFER TO SHEET E-10 AND E-11 FOR ELECTRICAL ONE LINE DIAGRAMS.

KEYNOTES (#)

1. ROUTE 1" EMPTY CONDUIT FROM SUMP PUMP CONTROL PANEL TO THE GRADE LEVEL ENTRY 100 FOR FIRUS CONNECTION BY FERMILAB.
2. REFER TO GROUND BAR DETAIL 2/E-14

UNLESS NOTED OTHERWISE ALL 120V RECEPTACLES CIRCUITS SHALL BE CONNECTED TO NORMAL PANEL 'PP-SFDBA1-B1' (PANEL LOCATED ON GRADE LEVEL). REFER TO CIRCUIT NUMBER NEXT TO RECEPTACLE AND PANEL SCHEDULE FOR ADDITIONAL INFORMATION.

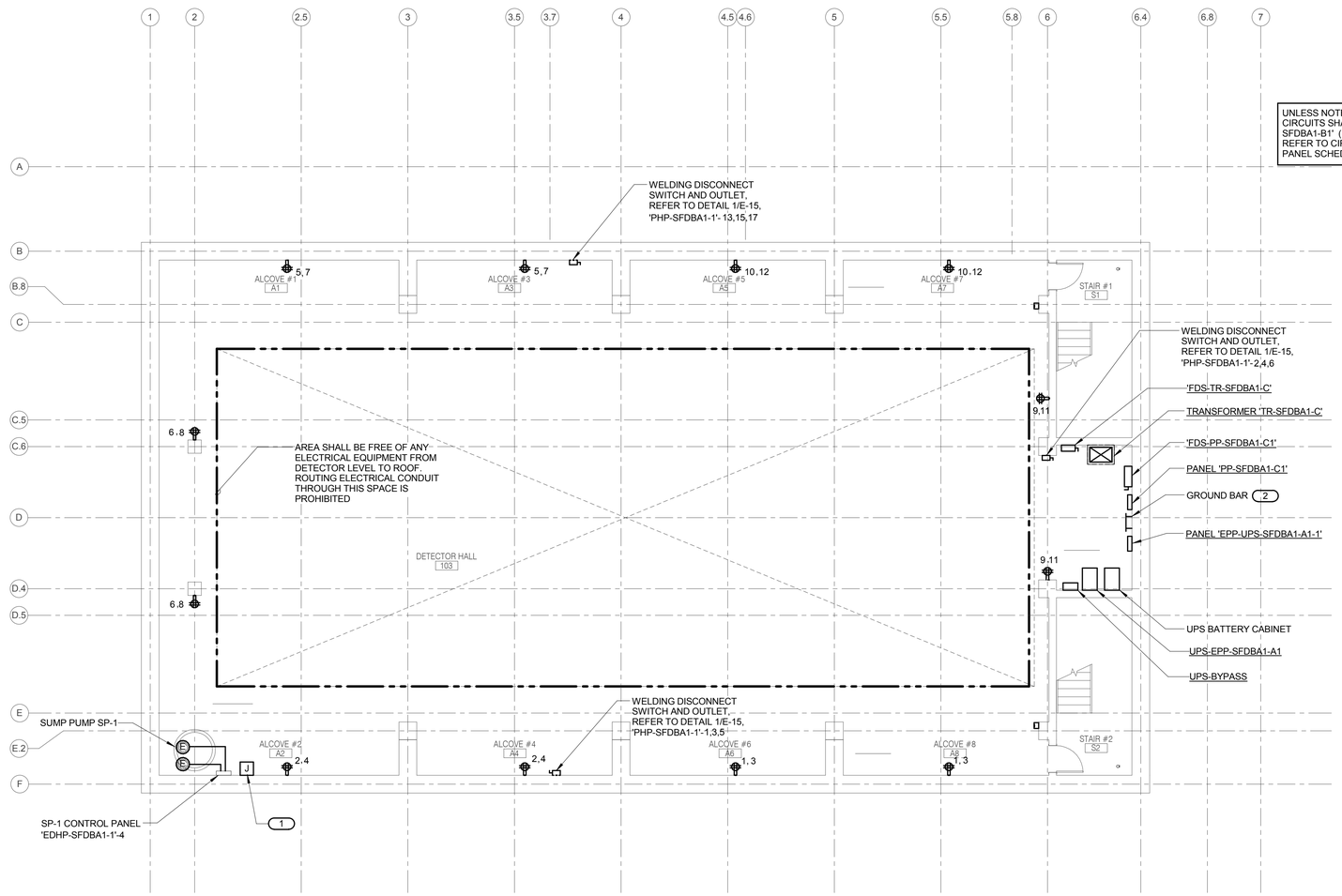

ENCLOSURE LEVEL POWER PLAN

C:\Revit Local Files\MEP15_14.0872.00 - Fermi Lab - Far Detector_CENTRAL_wellsma.rvt

3/2/2015 5:17:45 PM

REV.	DATE	REVISIONS
5	03/02/15	ISSUED FOR 90% REVIEW
4	02/23/15	ISSUED FOR 90% COST ESTIMATE
3	01/26/15	ISSUED FOR 60% REVIEW
2	01/16/15	ISSUED FOR PRICING
1	12/23/14	SCHEMATIC DESIGN

KJWW ENGINEERING CONSULTANTS
The FUTURE. Built SMARTER.®
1100 WARRENVILLE ROAD, SUITE 400W
NAPERVILLE, ILLINOIS 60563
630.527.2320 FAX: 630.527.2321
www.kjww.com
PROJECT #:
Illinois Design Firm Registration #184-000973

KJWW ENGINEERING RESERVES PROPRIETARY RIGHTS, INCLUDING COPYRIGHTS, TO THIS DRAWING AND THE DATA SHOWN THEREON. SAID DRAWING AND/OR DATA ARE THE EXCLUSIVE PROPERTY OF KJWW ENGINEERING AND SHALL NOT BE USED OR REPRODUCED FOR ANY OTHER PROJECT WITHOUT THE EXPRESS WRITTEN APPROVAL AND PARTICIPATION OF KJWW ENGINEERING. © 2015 KJWW, P.C.

REFERENCE SCALE IN INCHES 0 1 2 3

	FERMI LAB	DATE
DESIGNED	T. BALA	3/2/2015
DRAWN	M. WELLS	3/2/2015
CHECKED		
APPROVED		
SUBMITTED		

S W E PROJECT NORTH

SCALE: 1/8"=1'-0" 8 0 8 16 SCALE FEET

NOT FOR CONSTRUCTION

FERMI NATIONAL ACCELERATOR LABORATORY

UNITED STATES DEPARTMENT OF ENERGY

SBN FAR DETECTOR BUILDING

ENCLOSURE LEVEL POWER PLAN

DRAWING NO. **6-7-93** **E-4** REV. 5

02 MAR. 2015

GENERAL SHEET NOTES

1. REFER TO SHEET E-1 FOR GENERAL ELECTRICAL NOTES AND ELECTRICAL INSTALLATION NOTES.
2. REFER TO SHEET E-16 THROUGH E-18 FOR PANEL SCHEDULES.
3. REFER TO SHEET E-21 FOR GENERAL ELECTRICAL EQUIPMENT SCHEDULE.
4. REFER TO SHEET E-20 FOR DISCONNECT AND STARTER SCHEDULE, VARIABLE FREQUENCY DRIVE SCHEDULE, TRANSFORMER SCHEDULE AND TRANSFER SWITCH SCHEDULE.
5. REFER TO SHEET E-10 AND E-11 FOR ELECTRICAL ONE LINE DIAGRAMS.

KEYNOTES (#)

1. REFER TO GROUND BAR DETAIL 2/E-14.
2. PROVIDE SATURABLE INDUCTOR MOUNTED ON UNISTRUT NEXT TO THE TRANSFORMER FOR DOUBLE SHIELDED TRANSFORMERS. PRIMARY SIDE SHIELD SHALL BE GROUNDED TO THE BUILDING GROUND BAR. SECONDARY SIDE SHIELD SHALL BE GROUNDED TO DETECTOR GROUND THROUGH SATURABLE INDUCTOR.

UNLESS NOTED OTHERWISE ALL 120V RECEPTACLES CIRCUITS SHALL BE CONNECTED TO NORMAL PANEL 'PP-SFDBA1-B1' (PANEL LOCATED ON GRADE LEVEL). REFER TO CIRCUIT NUMBER NEXT TO RECEPTACLE AND PANEL SCHEDULE FOR ADDITIONAL INFORMATION.

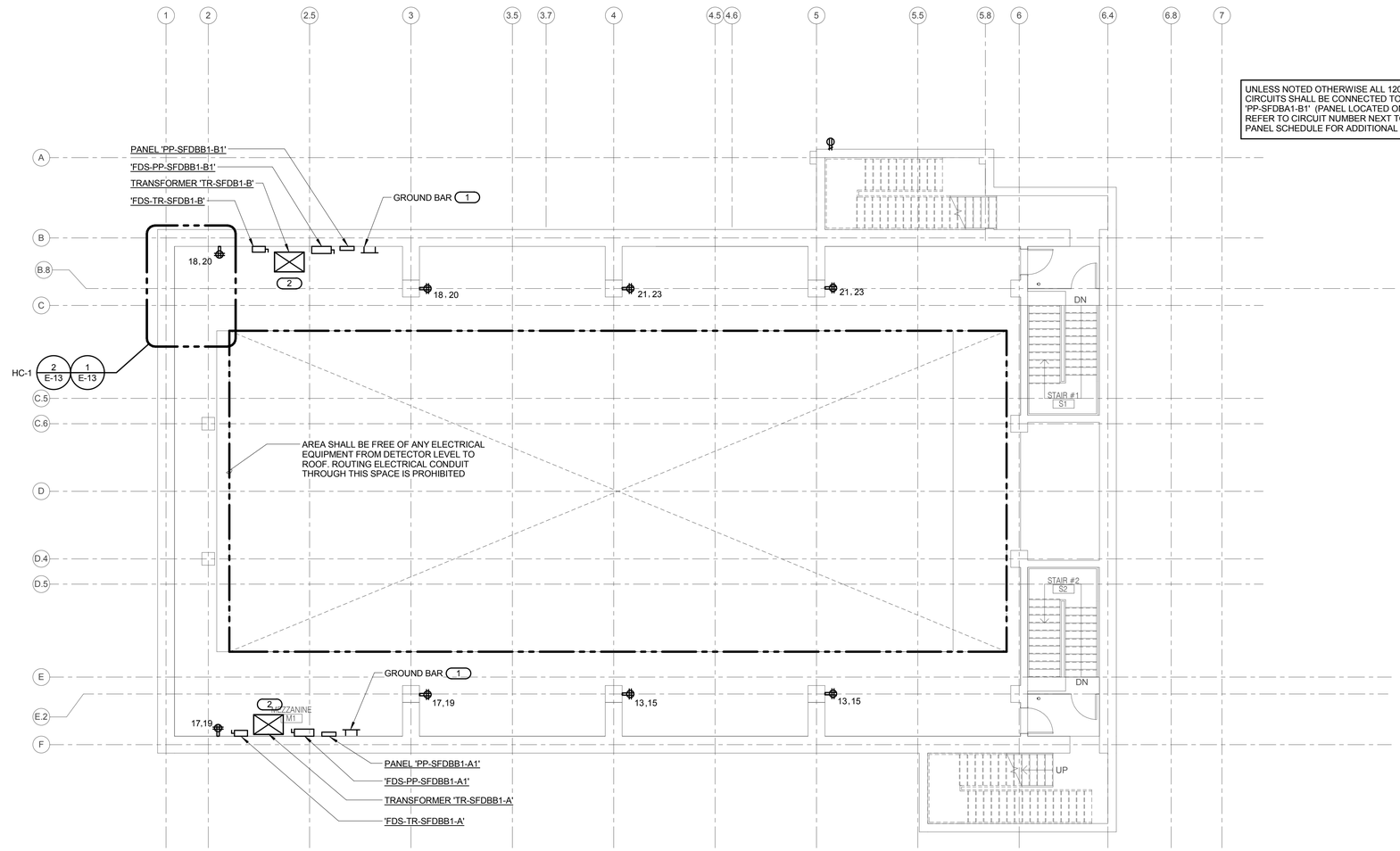

MEZZANINE LEVEL POWER PLAN

REV.	DATE	REVISIONS
5	03/02/15	ISSUED FOR 90% REVIEW
4	02/23/15	ISSUED FOR 90% COST ESTIMATE
3	01/26/15	ISSUED FOR 60% REVIEW
2	01/16/15	ISSUED FOR PRICING
1	12/23/14	SCHEMATIC DESIGN

KJWW ENGINEERING CONSULTANTS
The FUTURE. Built SMARTER.®
1100 WARRENVILLE ROAD, SUITE 400W
NAPERVILLE, ILLINOIS 60563
630.527.2320 FAX: 630.527.2321
www.kjww.com
PROJECT #:
Illinois Design Firm Registration #184-000973

KJWW ENGINEERING RESERVES PROPRIETARY RIGHTS, INCLUDING COPYRIGHTS, TO THIS DRAWING AND THE DATA SHOWN THEREON. SAID DRAWING AND/OR DATA ARE THE EXCLUSIVE PROPERTY OF KJWW ENGINEERING AND SHALL NOT BE USED OR REPRODUCED FOR ANY OTHER PROJECT WITHOUT THE EXPRESS WRITTEN APPROVAL AND PARTICIPATION OF KJWW ENGINEERING. © 2015 KJWW, P.C.

REFERENCE SCALE IN INCHES: 0 1 2 3

FERMI LAB		DATE
DESIGNED	T. BALA	3/2/2015
DRAWN	M. WELLS	3/2/2015
CHECKED		
APPROVED		
SUBMITTED		

S W E PROJECT NORTH

SCALE: 1/8"=1'-0" (8 0 8 16 FEET)

NOT FOR CONSTRUCTION

FERMI NATIONAL ACCELERATOR LABORATORY

UNITED STATES DEPARTMENT OF ENERGY

SBN FAR DETECTOR BUILDING

MEZZANINE LEVEL POWER PLAN

DRAWING NO. **6-7-93** **E-5** REV. 5

02 MAR. 2015

C:\Revit Local Files\MEP15_14.0872.00 - Fermi Lab - Far Detector_CENTRAL_wellsma.rvt

3/2/2015 5:17:46 PM

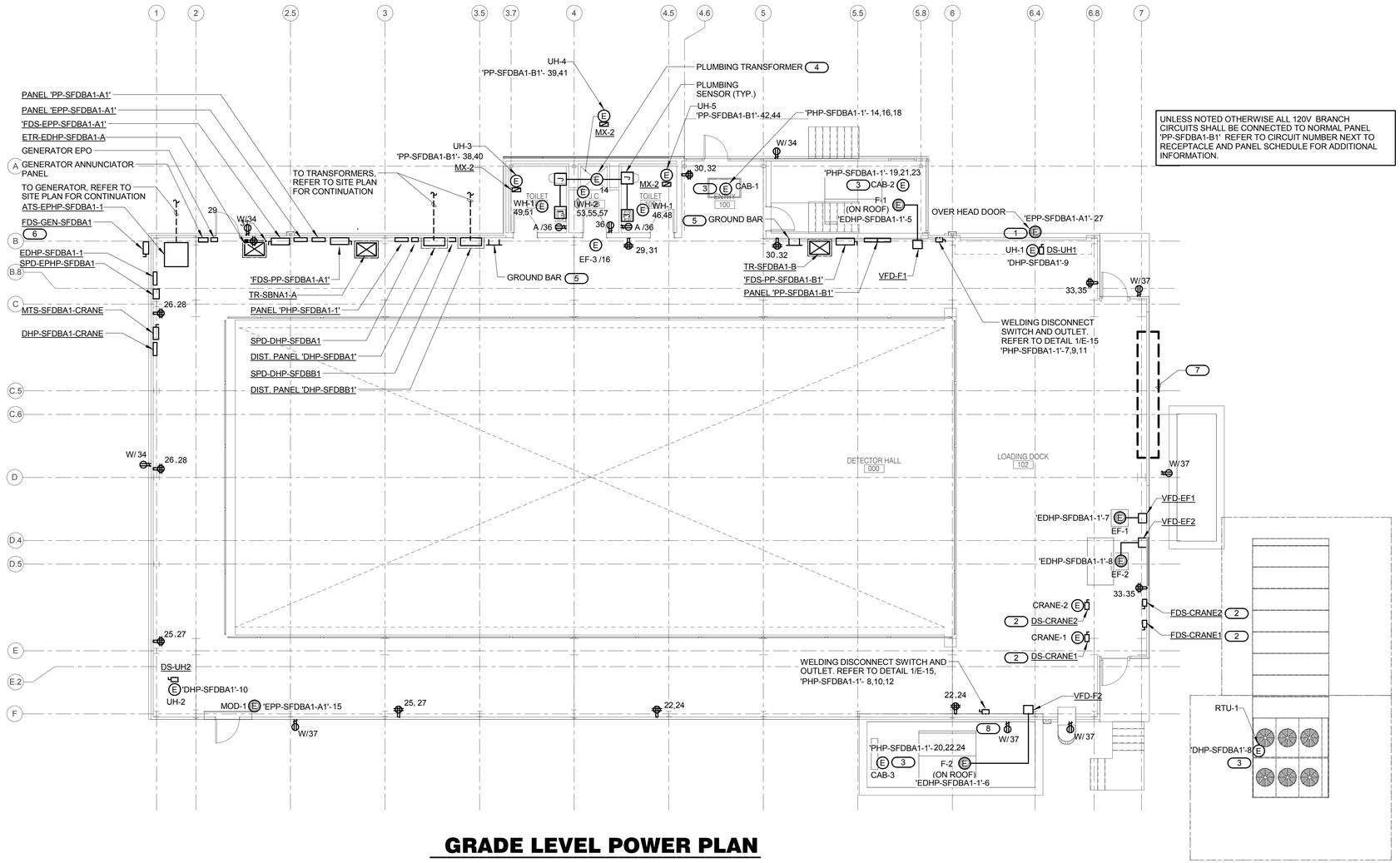

GRADE LEVEL POWER PLAN

UNLESS NOTED OTHERWISE ALL 120V BRANCH CIRCUITS SHALL BE CONNECTED TO NORMAL PANEL 'PP-SFDBA1-B1' REFER TO CIRCUIT NUMBER NEXT TO RECEPTACLE AND PANEL SCHEDULE FOR ADDITIONAL INFORMATION.

GENERAL SHEET NOTES

1. REFER TO SHEET E-1 FOR GENERAL ELECTRICAL NOTES AND ELECTRICAL INSTALLATION NOTES.
2. REFER TO SHEET E-16 THROUGH E-18 FOR PANEL SCHEDULES.
3. REFER TO SHEET E-21 FOR GENERAL ELECTRICAL EQUIPMENT SCHEDULE.
4. REFER TO SHEET E-20 FOR DISCONNECT AND STARTER SCHEDULE, VARIABLE FREQUENCY DRIVE SCHEDULE, TRANSFORMER SCHEDULE AND TRANSFER SWITCH SCHEDULE.
5. REFER TO SHEET E-10 AND E-11 FOR ELECTRICAL ONE LINE DIAGRAMS.

KEYNOTES (#)

1. WIRE OVERHEAD DOOR MOTOR. PROVIDE CONDUIT AND WIRE FOR DOOR CONTROLS PER MANUFACTURER REQUIREMENTS. COORDINATE LOCATIONS WITH EQUIPMENT SUPPLIER.
2. COORDINATE DISCONNECT LOCATIONS WITH CRANE APPROVED SHOP DRAWING PRIOR TO ROUGH-IN. FUSED DISCONNECT SHALL BE MOUNTED ON WALL. NON FUSED SHALL BE MOUNTED HIGH BY THE CRANE.
3. DISCONNECT PROVIDED WITH MECHANICAL EQUIPMENT.
4. TRANSFORMER FOR PLUMBING SENSORS PROVIDED BY P.C. INSTALLED AND WIRED BY E.C. E.C. SHALL ROUTE 3/4" C. FROM TRANSFORMER TO EACH SENSOR. P.C. TO INSTALL AND WIRE LOW VOLTAGE CABLE. COORDINATE LOCATION WITH P.C.
5. REFER TO GROUND BAR DETAIL 2/E-14.
6. FUSED DISCONNET SWITCH FOR THE CONNECTION OF PORTABLE GENERATOR TO SERVE THE CRANES.
7. REMOVABLE WALL. DO NOT ROUTE CONDUITS THROUGH THIS SPACE.
8. MOUNT RECEPTACLE INSIDE BY THE ACCESS TO THE CRANE. COORDINATE LOCATION WITH FERMILAB.

REV.	DATE	REVISIONS
5	03/02/15	ISSUED FOR 90% REVIEW
4	02/23/15	ISSUED FOR 90% COST ESTIMATE
3	01/26/15	ISSUED FOR 60% REVIEW
2	01/16/15	ISSUED FOR PRICING
1	12/23/14	SCHEMATIC DESIGN

KJWW ENGINEERING CONSULTANTS
The FUTURE. Built SMARTER.®
1100 WARRENVILLE ROAD, SUITE 400W
NAPERVILLE, ILLINOIS 60563
630.527.2320 FAX: 630.527.2321
www.kjww.com
PROJECT #:
Illinois Design Firm Registration #184-000973

KJWW ENGINEERING RESERVES PROPRIETARY RIGHTS, INCLUDING COPYRIGHTS, TO THIS DRAWING AND THE DATA SHOWN THEREON. SAID DRAWING AND/OR DATA ARE THE EXCLUSIVE PROPERTY OF KJWW ENGINEERING AND SHALL NOT BE USED OR REPRODUCED FOR ANY OTHER PROJECT WITHOUT THE EXPRESS WRITTEN APPROVAL AND PARTICIPATION OF KJWW ENGINEERING. © 2015 KJWW, P.C.

REFERENCE SCALE IN INCHES 0 1 2 3

	FERMI LAB	DATE
DESIGNED	T. BALA	3/2/2015
DRAWN	M. WELLS	3/2/2015
CHECKED		
APPROVED		
SUBMITTED		

S W E PROJECT NORTH

SCALE: 1/8"=1'-0" 8 0 8 16 SCALE FEET

NOT FOR CONSTRUCTION

FERMI NATIONAL ACCELERATOR LABORATORY
UNITED STATES DEPARTMENT OF ENERGY

SBN FAR DETECTOR BUILDING
GRADE LEVEL POWER PLAN

DRAWING NO. 6-7-93 E-6 REV. 5

02 MAR. 2015

C:\Revit Local Files\MEP15_14.0872.00 - Fermi Lab - Far Detector_CENTRAL_wellsma.rvt

3/2/2015 5:17:47 PM

GENERAL SHEET NOTES

1. REFER TO SHEET E-1 FOR GENERAL ELECTRICAL NOTES AND ELECTRICAL INSTALLATION NOTES.
2. REFER TO SHEET E-16 THROUGH E-18 FOR PANEL SCHEDULES.
3. REFER TO SHEET E-21 FOR GENERAL ELECTRICAL EQUIPMENT SCHEDULE.
4. REFER TO SHEET E-19 FOR LUMINAIRE SCHEDULE.
5. CONNECT EMERGENCY LIGHTING, EXIT SIGNS AND NIGHT LIGHT TO UNSWITCHED LEG OF THE NORMAL LIGHTING CIRCUIT UPSTREAM OF LIGHTING CONTROL.
6. REFER TO ARCHITECTURAL ELEVATIONS FOR LIGHTING FIXTURES MOUNTING HEIGHTS.

KEYNOTES (#)

1. REFER TO 1/E-12 FOR LIGHTING CONTROL RELAY PANEL CONTROL DIAGRAM 'LCP-SFDB'.

ALL 120V BRANCH CIRCUITS SHALL BE CONNECTED TO EMERGENCY PANEL 'EPP-SFDBA1-A1' (PANEL LOCATED ON GRADE LEVEL). REFER TO CIRCUIT NUMBER NEXT TO LUMINAIRE AND PANEL SCHEDULE FOR ADDITIONAL INFORMATION.

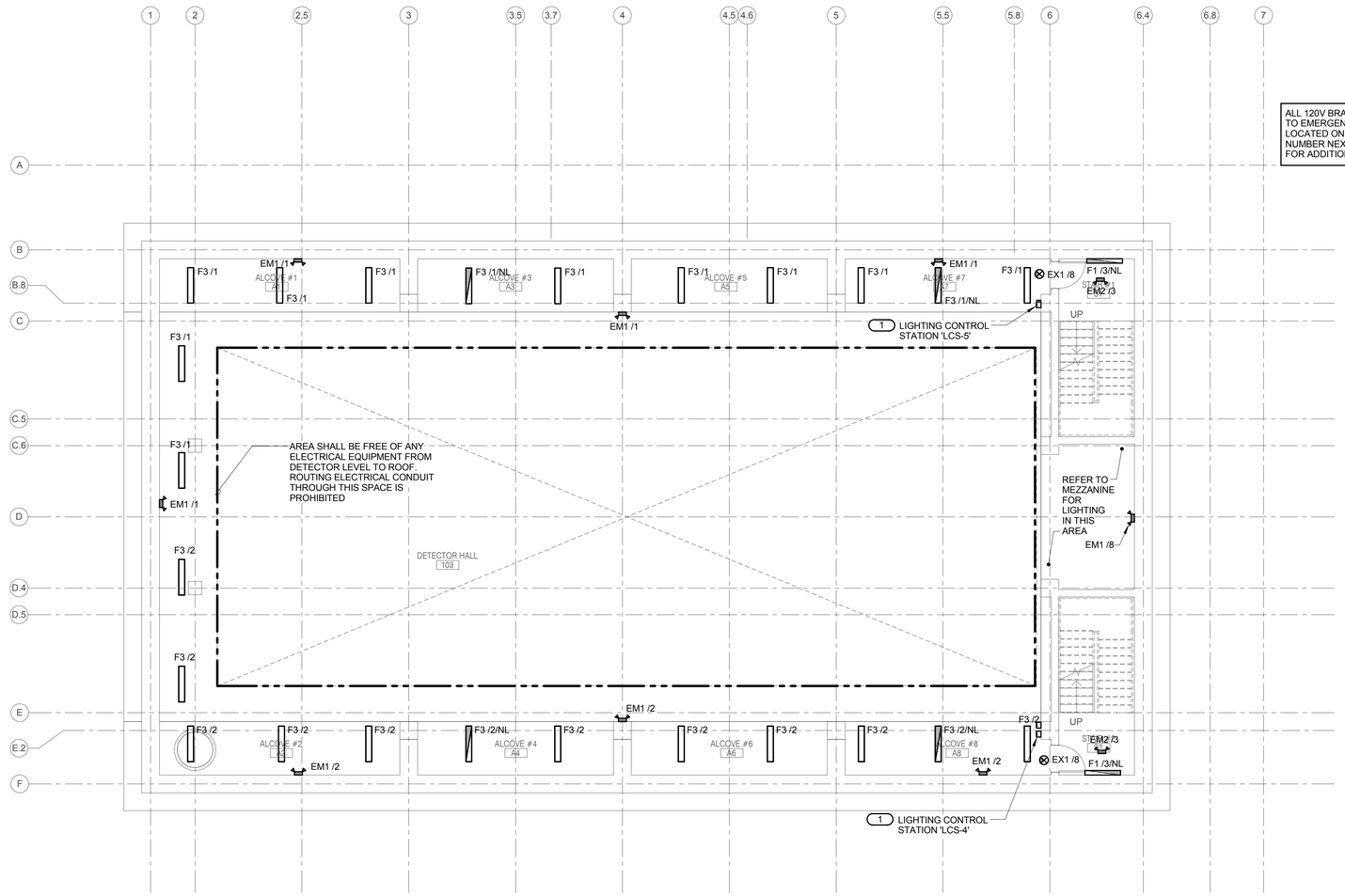

ENCLOSURE LEVEL LIGHTING PLAN

REV.	DATE	REVISIONS
5	03/02/15	ISSUED FOR 90% REVIEW
4	02/23/15	ISSUED FOR 90% COST ESTIMATE
3	01/26/15	ISSUED FOR 60% REVIEW
2	01/16/15	ISSUED FOR PRICING
1	12/23/14	SCHEMATIC DESIGN

KJWW ENGINEERING CONSULTANTS
The FUTURE. Built SMARTER.®
1100 WARRENVILLE ROAD, SUITE 400W
NAPERVILLE, ILLINOIS 60563
630.527.2320 FAX: 630.527.2321
www.kjww.com
PROJECT #:
Illinois Design Firm Registration #184-000973

KJWW ENGINEERING RESERVES PROPRIETARY RIGHTS, INCLUDING COPYRIGHTS, TO THIS DRAWING AND THE DATA SHOWN THEREON. SAID DRAWING AND/OR DATA ARE THE EXCLUSIVE PROPERTY OF KJWW ENGINEERING AND SHALL NOT BE USED OR REPRODUCED FOR ANY OTHER PROJECT WITHOUT THE EXPRESS WRITTEN APPROVAL AND PARTICIPATION OF KJWW ENGINEERING. © 2015 KJWW, P.C.

REFERENCE SCALE IN INCHES: 0 1 2 3

	FERMI LAB	DATE
DESIGNED	T. BALA	3/2/2015
DRAWN	M. WELLS	3/2/2015
CHECKED		
APPROVED		
SUBMITTED		

PROJECT NORTH

SCALE: 1/8"=1'-0" (8 0 8 16 SCALE FEET)

NOT FOR CONSTRUCTION

FERMI NATIONAL ACCELERATOR LABORATORY

UNITED STATES DEPARTMENT OF ENERGY

SBN FAR DETECTOR BUILDING

ENCLOSURE LEVEL LIGHTING PLAN

DRAWING NO. **6-7-93** **E-7** REV. 5

02 MAR. 2015

C:\Revit Local Files\MEP15_14.0872.00 - Fermi Lab - Far Detector_CENTRAL_wellsma.rvt

3/2/2015 5:17:48 PM

GENERAL SHEET NOTES

1. REFER TO SHEET E-1 FOR GENERAL ELECTRICAL NOTES AND ELECTRICAL INSTALLATION NOTES.
2. REFER TO SHEET E-16 THROUGH E-18 FOR PANEL SCHEDULES.
3. REFER TO SHEET E-21 FOR GENERAL ELECTRICAL EQUIPMENT SCHEDULE.
4. REFER TO SHEET E-19 FOR LUMINAIRE SCHEDULE.
5. CONNECT EMERGENCY LIGHTING, EXIT SIGNS AND NIGHT LIGHT TO UNSWITCHED LEG OF THE NORMAL LIGHTING CIRCUIT UPSTREAM OF LIGHTING CONTROL.
6. REFER TO ARCHITECTURAL ELEVATIONS FOR LIGHTING FIXTURES MOUNTING HEIGHTS.

KEYNOTES (#)

1. REFER TO 1/E-12 FOR LIGHTING CONTROL RELAY PANEL CONTROL DIAGRAM 'LCP-SFDB'.

ALL 120V BRANCH CIRCUITS SHALL BE CONNECTED TO EMERGENCY PANEL 'EPP-SFDBA1-A1' (PANEL LOCATED ON GRADE LEVEL). REFER TO CIRCUIT NUMBER NEXT TO LUMINAIRE AND PANEL SCHEDULE FOR ADDITIONAL INFORMATION.

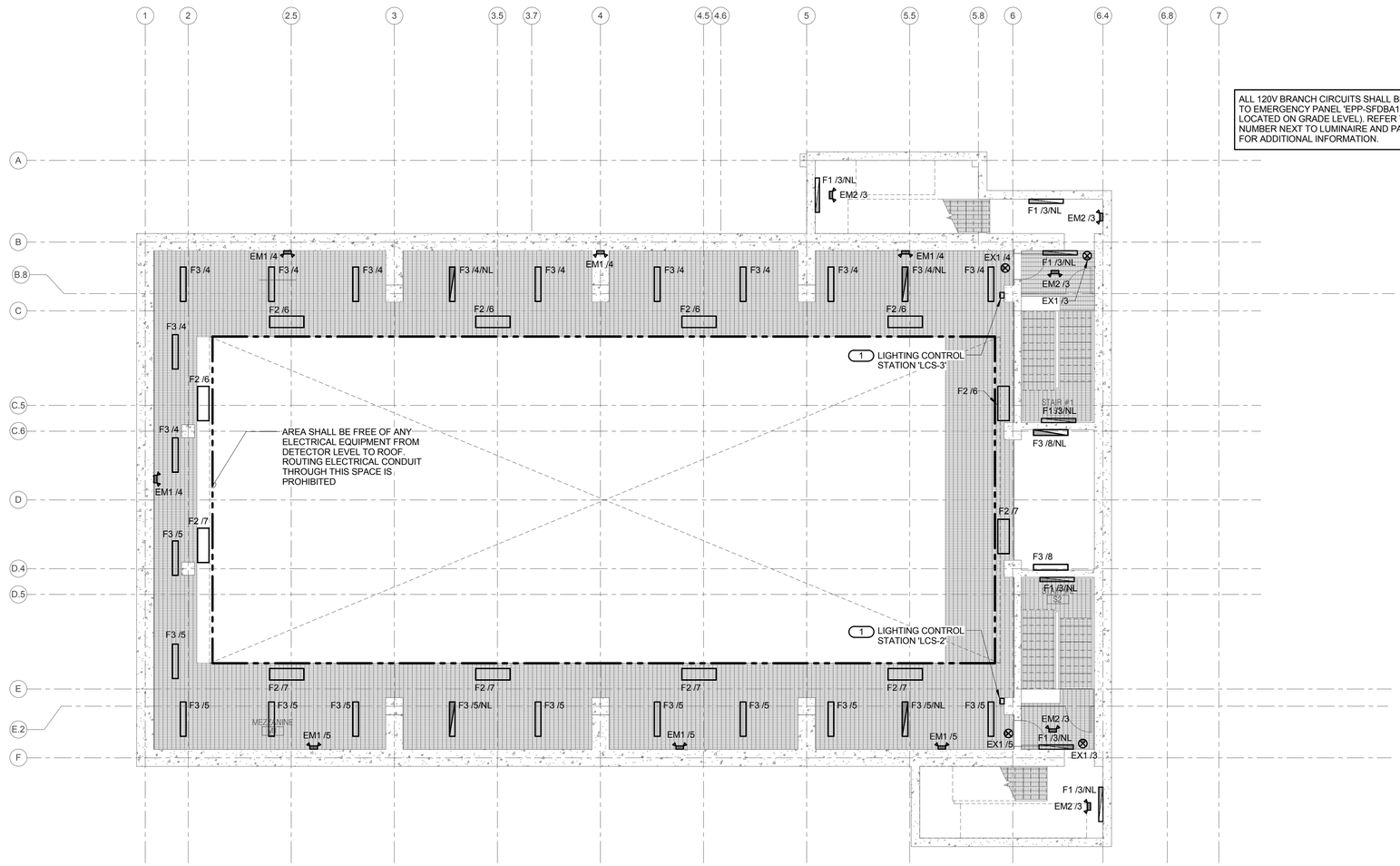

MEZZANINE LEVEL LIGHTING PLAN

REV.	DATE	REVISIONS
5	03/02/15	ISSUED FOR 90% REVIEW
4	02/23/15	ISSUED FOR 90% COST ESTIMATE
3	01/26/15	ISSUED FOR 60% REVIEW
2	01/16/15	ISSUED FOR PRICING
1	12/23/14	SCHEMATIC DESIGN

KJWW ENGINEERING CONSULTANTS
The FUTURE Built SMARTER.®
1100 WARRENVILLE ROAD, SUITE 400W
NAPERVILLE, ILLINOIS 60563
630.527.2320 FAX: 630.527.2321
www.kjww.com
PROJECT #:
Illinois Design Firm Registration #184-000973

KJWW ENGINEERING RESERVES PROPRIETARY RIGHTS, INCLUDING COPYRIGHTS, TO THIS DRAWING AND THE DATA SHOWN THEREON. SAID DRAWING AND/OR DATA ARE THE EXCLUSIVE PROPERTY OF KJWW ENGINEERING AND SHALL NOT BE USED OR REPRODUCED FOR ANY OTHER PROJECT WITHOUT THE EXPRESS WRITTEN APPROVAL AND PARTICIPATION OF KJWW ENGINEERING. © 2015 KJWW, P.C.

REFERENCE SCALE IN INCHES 0 1 2 3

FERMI LAB		DATE
DESIGNED	T. BALA	3/2/2015
DRAWN	M. WELLS	3/2/2015
CHECKED		
APPROVED		
SUBMITTED		

S W E PROJECT NORTH

SCALE: 1/8"=1'-0" 8 0 8 16 SCALE FEET

NOT FOR CONSTRUCTION

FERMI NATIONAL ACCELERATOR LABORATORY

UNITED STATES DEPARTMENT OF ENERGY

SBN FAR DETECTOR BUILDING

MEZZANINE LEVEL LIGHTING PLAN

DRAWING NO. **6-7-93** **E-8** REV. **5**

02 MAR. 2015

C:\Revit Local Files\MEP15_14.0872.00 - Fermi Lab - Far Detector_CENTRAL_wellsma.rvt

3/2/2015 5:17:49 PM

GENERAL SHEET NOTES

1. REFER TO SHEET E-1 FOR GENERAL ELECTRICAL NOTES AND ELECTRICAL INSTALLATION NOTES.
2. REFER TO SHEET E-16 THROUGH E-18 FORPANEL SCHEDULES.
3. REFER TO SHEET E-21 FOR GENERAL ELECTRICAL EQUIPMENT SCHEDULE.
4. REFER TO SHEET E-19 FOR LUMINAIRE SCHEDULE.
5. CONNECT EMERGENCY LIGHTING, EXIT SIGNS AND NIGHT LIGHT TO UNSWITCHED LEG OF THE NORMAL LIGHTING CIRCUIT UPSTREAM OF LIGHTING CONTROL.
6. REFER TO ARCHITECTURAL ELEVATIONS FOR LIGHTING FIXTURES MOUNTING HEIGHTS.

KEYNOTES (#)

1. MOUNT FIXTURES ABOVE THE CRANE, TIGHT TO THE CEILING.
2. MOUNT FIXTURES ON THE WALL ABOVE THE CRANE.
3. REFER TO 1/E-12 FOR LIGHTING CONTROL RELAY PANEL CONTROL DIAGRAM 'LCP-SFDB'.
4. REMOVABLE WALL. DO NOT ROUTE CONDUITS THROUGH THIS SPACE.

ALL 120V BRANCH CIRCUITS SHALL BE CONNECTED TO EMERGENCY PANEL 'EPP-SFDBA1-A1' (PANEL LOCATED ON GRADE LEVEL). REFER TO CIRCUIT NUMBER NEXT TO LUMINAIRE AND PANEL SCHEDULE FOR ADDITIONAL INFORMATION.

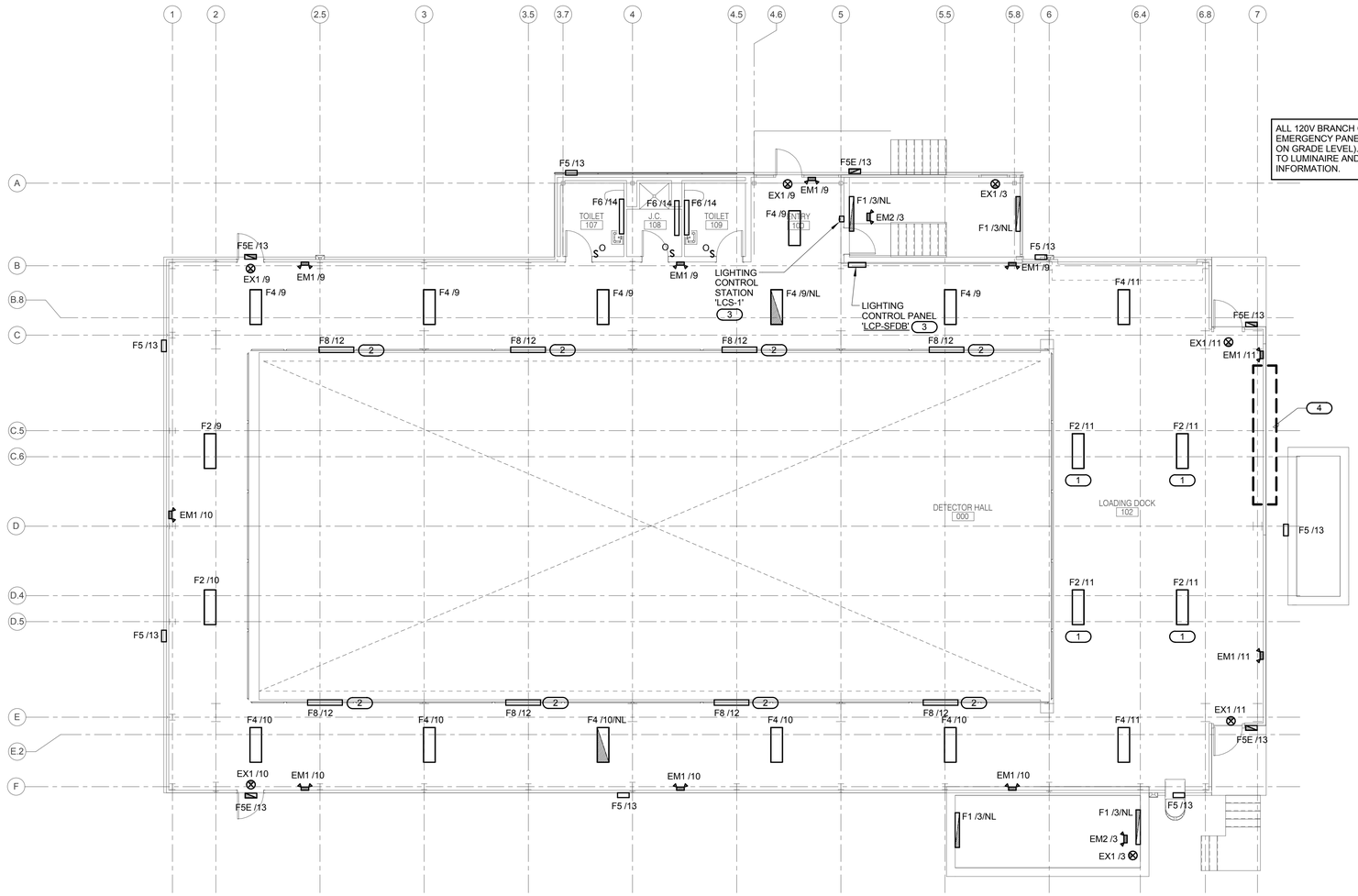

GRADE LEVEL LIGHTING PLAN

REV.	DATE	REVISIONS
5	03/02/15	ISSUED FOR 90% REVIEW
4	02/23/15	ISSUED FOR 90% COST ESTIMATE
3	01/26/15	ISSUED FOR 60% REVIEW
2	01/16/15	ISSUED FOR PRICING
1	12/23/14	SCHEMATIC DESIGN

KJWW ENGINEERING CONSULTANTS
The FUTURE Built SMARTER.
1100 WARRENVILLE ROAD, SUITE 400W
NAPERVILLE, ILLINOIS 60563
630.527.2320 FAX: 630.527.2321
www.kjww.com
PROJECT #:
Illinois Design Firm Registration #184-000973

KJWW ENGINEERING RESERVES PROPRIETARY RIGHTS, INCLUDING COPYRIGHTS, TO THIS DRAWING AND THE DATA SHOWN THEREON. SAID DRAWING AND/OR DATA ARE THE EXCLUSIVE PROPERTY OF KJWW ENGINEERING AND SHALL NOT BE USED OR REPRODUCED FOR ANY OTHER PROJECT WITHOUT THE EXPRESS WRITTEN APPROVAL AND PARTICIPATION OF KJWW ENGINEERING. © 2015 KJWW, P.C.

REFERENCE SCALE IN INCHES 0 1 2 3

	FERMI LAB	DATE
DESIGNED	T. BALA	3/2/2015
DRAWN	M. WELLS	3/2/2015
CHECKED		
APPROVED		
SUBMITTED		

S W E PROJECT NORTH

SCALE: 1/8"=1'-0" (8 0 8 16 SCALE FEET)

NOT FOR CONSTRUCTION

FERMI NATIONAL ACCELERATOR LABORATORY
UNITED STATES DEPARTMENT OF ENERGY

SBN FAR DETECTOR BUILDING
GRADE LEVEL LIGHTING PLAN

DRAWING NO. 6-7-93 E-9 REV. 5

02 MAR. 2015

C:\Revit Local Files\MEP15_14.0872.00 - Fermi Lab - Far Detector_CENTRAL_wellsma.rvt

3/2/2015 5:17:50 PM

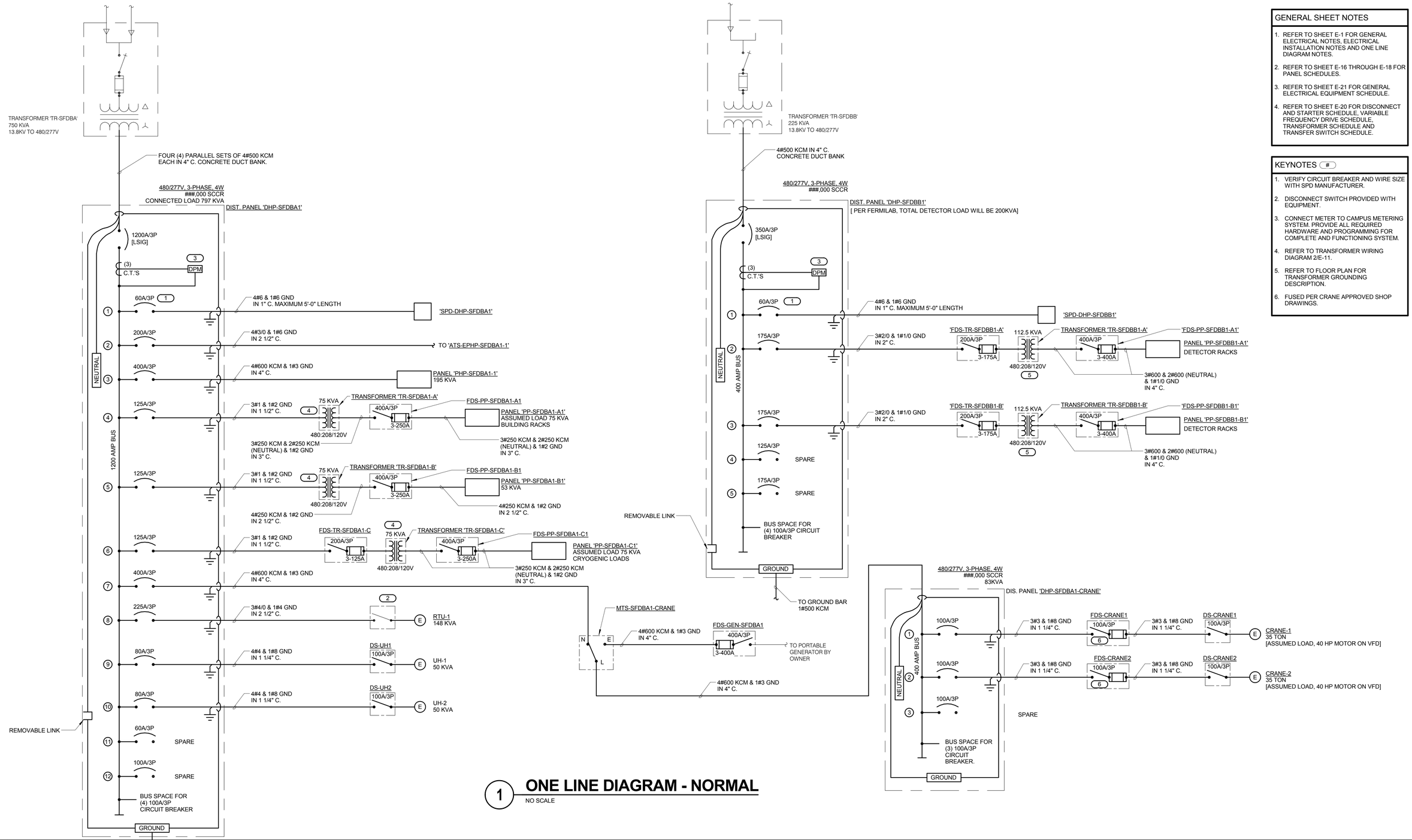

1 ONE LINE DIAGRAM - NORMAL

NO SCALE

GENERAL SHEET NOTES

1. REFER TO SHEET E-1 FOR GENERAL ELECTRICAL NOTES, ELECTRICAL INSTALLATION NOTES AND ONE LINE DIAGRAM NOTES.
2. REFER TO SHEET E-16 THROUGH E-18 FOR PANEL SCHEDULES.
3. REFER TO SHEET E-21 FOR GENERAL ELECTRICAL EQUIPMENT SCHEDULE.
4. REFER TO SHEET E-20 FOR DISCONNECT AND STARTER SCHEDULE, VARIABLE FREQUENCY DRIVE SCHEDULE, TRANSFORMER SCHEDULE AND TRANSFER SWITCH SCHEDULE.

KEYNOTES (#)

1. VERIFY CIRCUIT BREAKER AND WIRE SIZE WITH SPD MANUFACTURER.
2. DISCONNECT SWITCH PROVIDED WITH EQUIPMENT.
3. CONNECT METER TO CAMPUS METERING SYSTEM. PROVIDE ALL REQUIRED HARDWARE AND PROGRAMMING FOR COMPLETE AND FUNCTIONING SYSTEM.
4. REFER TO TRANSFORMER WIRING DIAGRAM 2/E-11.
5. REFER TO FLOOR PLAN FOR TRANSFORMER GROUNDING DESCRIPTION.
6. FUSED PER CRANE APPROVED SHOP DRAWINGS.

REV.	DATE	REVISIONS
5	03/02/15	ISSUED FOR 90% REVIEW
4	02/23/15	ISSUED FOR 90% COST ESTIMATE
3	01/26/15	ISSUED FOR 60% REVIEW
2	01/16/15	ISSUED FOR PRICING
1	12/23/14	SCHEMATIC DESIGN

KJWW ENGINEERING CONSULTANTS
The FUTURE Built SMARTER.®
1100 WARRENVILLE ROAD, SUITE 400W
NAPERVILLE, ILLINOIS 60563
630.527.2320 FAX: 630.527.2321
www.kjww.com
PROJECT #:
Illinois Design Firm Registration #184-000973

KJWW ENGINEERING RESERVES PROPRIETARY RIGHTS, INCLUDING COPYRIGHTS, TO THIS DRAWING AND THE DATA SHOWN THEREON. SAID DRAWING AND/OR DATA ARE THE EXCLUSIVE PROPERTY OF KJWW ENGINEERING AND SHALL NOT BE USED OR REPRODUCED FOR ANY OTHER PROJECT WITHOUT THE EXPRESS WRITTEN APPROVAL AND PARTICIPATION OF KJWW ENGINEERING. © 2015 KJWW, P.C.

REFERENCE SCALE IN INCHES
0 1 2 3

	FERMI LAB	DATE
DESIGNED	T. BALA	3/2/2015
DRAWN	M. WELLS	3/2/2015
CHECKED		
APPROVED		
SUBMITTED		

SCALE:

NOT FOR CONSTRUCTION

FERMI NATIONAL ACCELERATOR LABORATORY

UNITED STATES DEPARTMENT OF ENERGY

SBN FAR DETECTOR BUILDING

ONE LINE DIAGRAM - NORMAL

DRAWING NO. 6-7-93 E-10 REV. 5

02 MAR. 2015

C:\Revit Local Files\MEP15_14.0872.00 - Fermi Lab - Far Detector_CENTRAL_wellsma.rvt

3/2/2015 5:17:50 PM

GENERAL SHEET NOTES

1. REFER TO SHEET E-1 FOR GENERAL ELECTRICAL NOTES , ELECTRICAL INSTALLATION NOTES AND ONE LINE DIAGRAM NOTES.
2. REFER TO SHEET E-16 THROUGH E-18 FOR PANEL SCHEDULES.
3. REFER TO SHEET E-21 FOR GENERAL ELECTRICAL EQUIPMENT SCHEDULE.
4. REFER TO SHEET E-20 FOR DISCONNECT AND STARTER SCHEDULE, VARIABLE FREQUENCY DRIVE SCHEDULE, TRANSFORMER SCHEDULE AND TRANSFER SWITCH SCHEDULE.

KEYNOTES (#)

1. VERIFY CIRCUIT BREAKER AND WIRE SIZE WITH SPD MANUFACTURER.
2. ROUTE CONTROL WIRING PER MANUFACTURER REQUIREMENTS IN MINIMUM 1" CONDUIT.
3. REFER TO TRANSFORMER WIRING DETAIL 2/E-11.

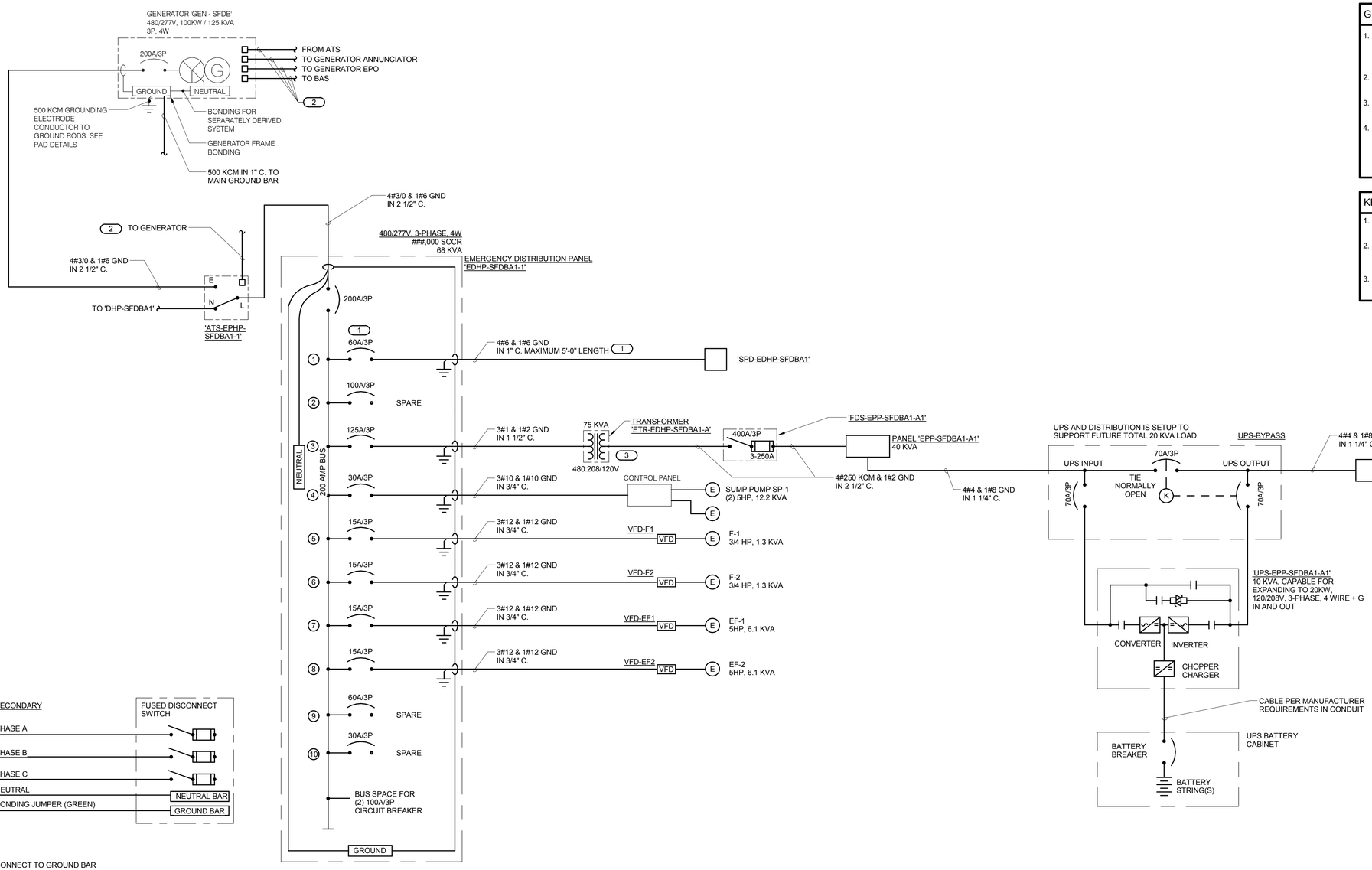

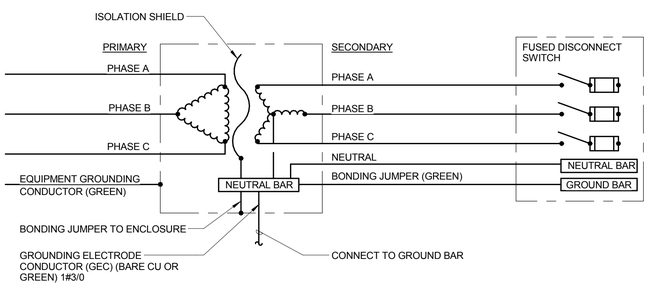

2 TRANSFORMER WIRING DETAIL

NO SCALE

1 ONE LINE DIAGRAM - EMERGENCY

NO SCALE

REV.	DATE	REVISIONS
5	03/02/15	ISSUED FOR 90% REVIEW
4	02/23/15	ISSUED FOR 90% COST ESTIMATE
3	01/26/15	ISSUED FOR 60% REVIEW
2	01/16/15	ISSUED FOR PRICING
1	12/23/14	SCHEMATIC DESIGN

KJWW ENGINEERING CONSULTANTS
The FUTURE. Built SMARTER.®
1100 WARRENVILLE ROAD, SUITE 400W
NAPERVILLE, ILLINOIS 60563
630.527.2320 FAX: 630.527.2321
www.kjww.com
PROJECT #:
Illinois Design Firm Registration #184-000973

KJWW ENGINEERING RESERVES PROPRIETARY RIGHTS, INCLUDING COPYRIGHTS, TO THIS DRAWING AND THE DATA SHOWN THEREON. SAID DRAWING AND/OR DATA ARE THE EXCLUSIVE PROPERTY OF KJWW ENGINEERING AND SHALL NOT BE USED OR REPRODUCED FOR ANY OTHER PROJECT WITHOUT THE EXPRESS WRITTEN APPROVAL AND PARTICIPATION OF KJWW ENGINEERING. © 2015 KJWW, P.C.

REFERENCE SCALE IN INCHES 0 1 2 3

	FERMI LAB	DATE
DESIGNED	T. BALA	3/2/2015
DRAWN	M. WELLS	3/2/2015
CHECKED		
APPROVED		
SUBMITTED		

SCALE:

NOT FOR CONSTRUCTION

FERMI NATIONAL ACCELERATOR LABORATORY

UNITED STATES DEPARTMENT OF ENERGY

SBN FAR DETECTOR BUILDING

ONE LINE DIAGRAM - EMERGENCY

DRAWING NO. **6-7-93** **E-11** REV. 5

02 MAR. 2015

C:\Revit Local Files\MEP15_14.0872.00 - Fermi Lab - Far Detector_CENTRAL_wellsma.rvt

3/2/2015 5:17:51 PM

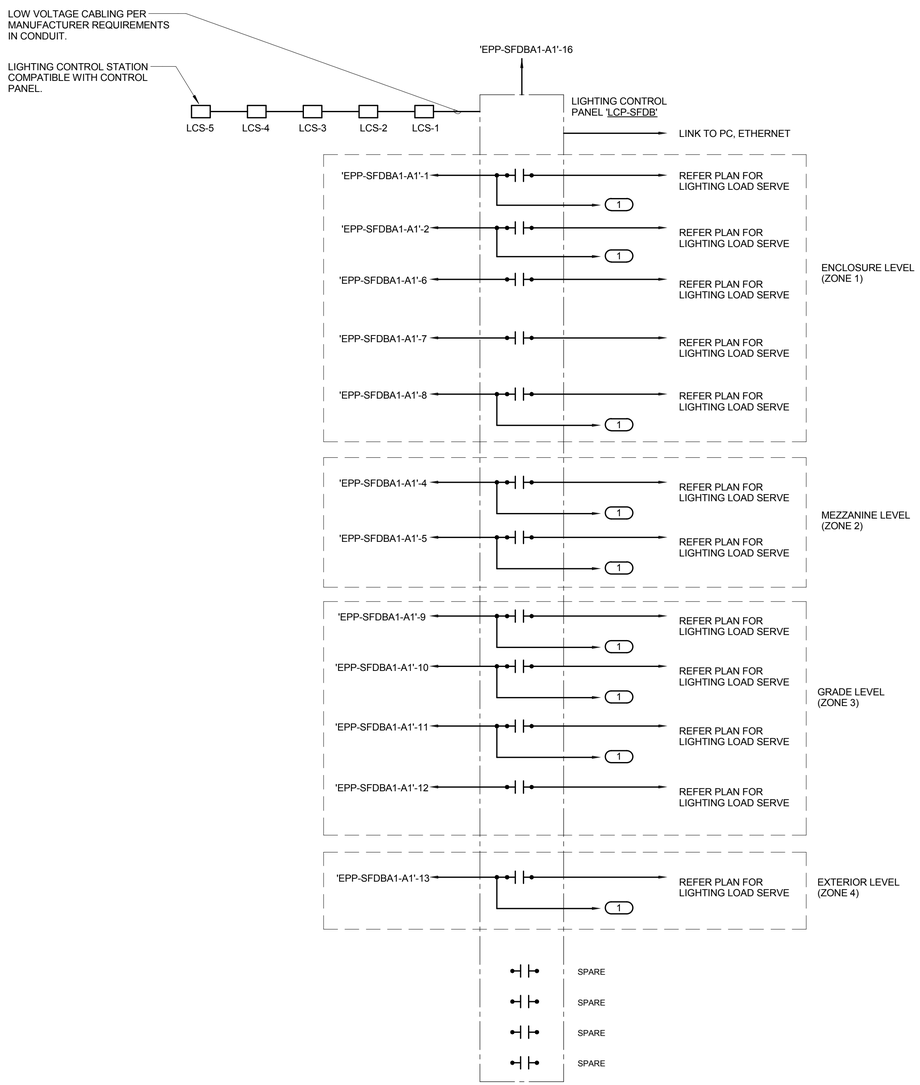

LIGHTING CONTROL STATION ' LCS-1'

1	ZONE 3 LEVEL LIGHTS ON/OFF
2	ZONE 2 LEVEL LIGHTS ON/OFF
3	ZONE 1 LEVEL LIGHTS ON/OFF
4	OVERRIDE ALL (2)

LIGHTING CONTROL STATION ' LCS-2 & LCS-3'

1	ALL ON ZONE 2
2	ALL OFF ZONE 2
3	ALL ON ZONE 1
4	ALL OFF ZONE 1
5	OVERRIDE (2)

LIGHTING CONTROL STATION ' LCS-4 & LCS-5'

1	ALL ON ZONE 1
2	ALL OFF ZONE 1
3	OVERRIDE (2)

NOTES:

1. COORDINATE ALL WIRING REQUIREMENTS AND INTERFACES TO EXTERNAL DEVICES WITH EQUIPMENT MANUFACTURER AND APPROVED SHOP DRAWINGS.
2. COORDINATE ALL SCHEDULING WITH OWNER.
3. PROVIDE LIGHTING CONTROL SOFTWARE UNITY 2.2 AND PROGRAMMING.

KEYNOTES:

(1) TO EXIT SIGNS, EMERGENCY LIGHTS AND NIGHT LIGHTS.

(2) AFTER HOURS OVERRIDE SHALL BE SET TO MAXIMUM 2 HOURS. LIGHTS SHALL BLINK 1 MINUTE PRIOR TO TURNING OFF.

1 LIGHTING CONTROL RELAY PANEL CONTROL DIAGRAM LCP-SFDB

NO SCALE

REV.	DATE	REVISIONS
5	03/02/15	ISSUED FOR 90% REVIEW
4	02/23/15	ISSUED FOR 90% COST ESTIMATE
3	01/26/15	ISSUED FOR 60% REVIEW
2	01/16/15	ISSUED FOR PRICING
1	12/23/14	SCHEMATIC DESIGN

KJWW ENGINEERING CONSULTANTS
The FUTURE. Built SMARTER.
1100 WARRENVILLE ROAD, SUITE 400W
NAPERVILLE, ILLINOIS 60563
630.527.2320 FAX: 630.527.2321
www.kjww.com
PROJECT #:
Illinois Design Firm Registration #184-000973

KJWW ENGINEERING RESERVES PROPRIETARY RIGHTS, INCLUDING COPYRIGHTS, TO THIS DRAWING AND THE DATA SHOWN THEREON. SAID DRAWING AND/OR DATA ARE THE EXCLUSIVE PROPERTY OF KJWW ENGINEERING AND SHALL NOT BE USED OR REPRODUCED FOR ANY OTHER PROJECT WITHOUT THE EXPRESS WRITTEN APPROVAL AND PARTICIPATION OF KJWW ENGINEERING. © 2015 KJWW, P.C.

REFERENCE SCALE IN INCHES 0 1 2 3

	FERMI LAB	DATE
DESIGNED	T. BALA	3/2/2015
DRAWN	M. WELLS	3/2/2015
CHECKED		
APPROVED		
SUBMITTED		

SCALE:

NOT FOR CONSTRUCTION

FERMI NATIONAL ACCELERATOR LABORATORY

UNITED STATES DEPARTMENT OF ENERGY

SBN FAR DETECTOR BUILDING

ELECTRICAL DETAILS

DRAWING NO. 6-7-93 E-12 REV. 5

02 MAR. 2015

C:\Revit Local Files\MEP15_14.0872.00 - Fermi Lab - Far Detector_CENTRAL_wellsma.rvt

3/2/2015 5:17:51 PM

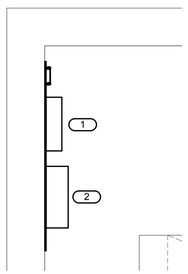

1 TELECOM EQUIPMENT LAYOUT HC-1

1/4" = 1'-0"

NOTES:

1. REFER TO E-21 FOR ELECTRICAL EQUIPMENT SCHEDULE.

KEYNOTES: (#)

1. SPACE RESERVED FOR FUTURE LIGHTNING PROTECTION AND COPPER DEMARCATION.
2. SPACE RESERVED FOR FUTURE FIBER DISTRIBUTION CABINET.

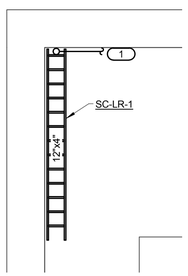

2 TELECOM EQUIPMENT PATHWAY HC-1

1/4" = 1'-0"

NOTES:

1. REFER TO E-21 FOR ELECTRICAL EQUIPMENT SCHEDULE.

KEYNOTES: (#)

1. INCOMING TELECOM PATHWAYS ROUTED FROM GRADE LEVEL. REFER TO SITE PACKAGE DRAWING E-2 FOR CONTINUATION.

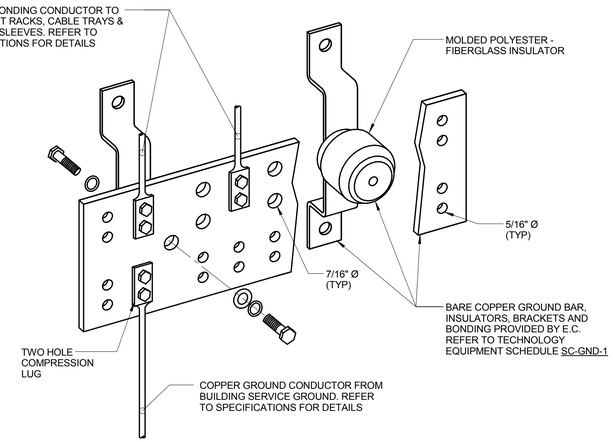

3 BONDING BUS BAR DETAIL

NO SCALE

NOTES:

1. REFER TO ELECTRICAL EQUIPMENT SCHEDULE SC-GND-1 FOR WIDTH REQUIREMENTS.
2. REFER TO 4/E-13 FOR TECHNOLOGY BONDING RISER DIAGRAM.

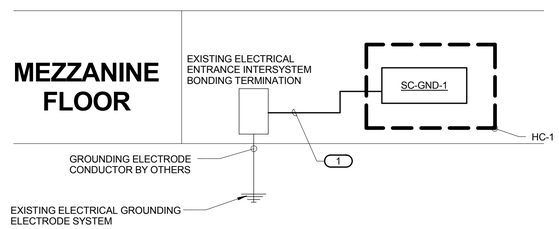

4 TECHNOLOGY BONDING RISER DIAGRAM

NO SCALE

NOTES:

1. THIS RISER IS DIAGRAMMATIC AND MAY NOT SHOW ACTUAL ROUTING OR QUANTITIES OF MATERIALS. THIS RISER IS SHOWN FOR CLARIFICATION OF CONNECTION LOCATIONS AND CONDUCTOR TYPE. ALL CONNECTIONS AND SYSTEM DEVICES SHOWN ARE TYPICAL AND NOT REPRESENTATIVE OF ACTUAL PROJECT QUANTITIES. REFER TO FLOOR PLANS AND ENLARGED FLOOR PLANS FOR ACTUAL QUANTITIES AND LOCATIONS OF DEVICES AND MORE SPECIFIC ROUTING INFORMATION. REFER TO SPECIFICATIONS FOR ADDITIONAL REQUIREMENTS.
2. ALL CONDUCTORS IN THE TECHNOLOGY BONDING SYSTEM SHALL BE MINIMUM SIZE OF 3/0 AWG [PLENUM RATED] COPPER (GREEN OR MARKED WITH A DISTINCTIVE GREEN COLOR) UNLESS CONDUCTOR LENGTH IS LESS THAN 66 FEET. REFER TO BONDING CONDUCTOR SIZING SCHEDULE FOR SIZING CRITERIA FOR CONDUCTORS LESS THAN 66 FEET IN LENGTH. REFER TO SPECIFICATIONS FOR ADDITIONAL REQUIREMENTS.
3. ALL BONDING CONDUCTORS AND BONDING JUMPERS SHALL BE CONNECTED BY COMPRESSION LUGS, EXOTHERMIC WELDING, OR IRREVERSIBLE COMPRESSION CONNECTORS. SOLDER IS NOT AN ACCEPTABLE MEANS OF CONNECTION.SHEET METAL SCREWS SHALL NOT BE USED TO CONNECT COMMUNICATIONS BONDING CONDUCTORS TO EQUIPMENT. WHERE NECESSARY, REMOVE PAINT AND/OR USE PAINT-PIERCING WASHERS TO PROVIDE PROPER ELECTRICAL BOND AT ALL CONNECTIONS.
4. REFER TO 5/E-13 FOR TYPICAL TELECOM ROOM BONDING FLOW DIAGRAM.
5. REFER TO TELECOM ROOM REFERENCES SCHEDULE ON DRAWING E-1 FOR TELECOMMUNICATIONS ROOM NUMBER AND LOCATION INFORMATION.

KEYNOTES:

1. BONDING CONDUCTOR FOR TELECOMMUNICATIONS (BCT). BCT SHALL BE THE SAME SIZE AS THE TBB OR LARGER. REFER TO BONDING CONDUCTOR SIZING SCHEDULE FOR SIZING REQUIREMENTS.

BONDING CONDUCTOR SIZING SCHEDULE	
CONDUCTOR LENGTH IN FEET	MINIMUM ACCEPTABLE SIZE - AWG
LESS THAN 13'	6
14' - 20'	4
21' - 26'	3
27' - 33'	2
34' - 41'	1
42' - 52'	1/0
53' - 66'	2/0
GREATER THAN 66'	3/0

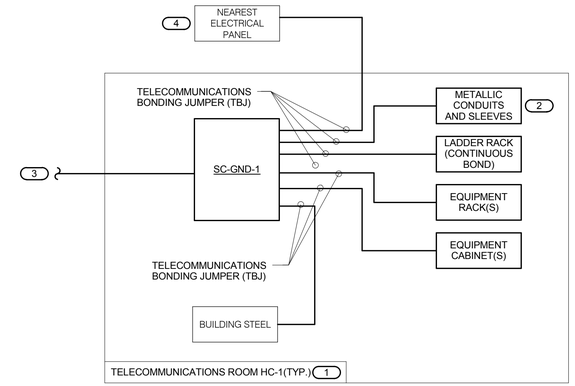

5 TYPICAL TELECOM ROOM BONDING FLOW DIAGRAM

NO SCALE

NOTES:

1. THIS FLOW DIAGRAM IS DIAGRAMMATIC AND MAY NOT SHOW ACTUAL ROUTING OR QUANTITIES OF MATERIALS. THIS FLOW DIAGRAM IS SHOWN FOR CLARIFICATION OF CONNECTION LOCATIONS AND CONDUCTOR TYPE. ALL CONNECTIONS AND SYSTEM DEVICES SHOWN ARE TYPICAL AND NOT REPRESENTATIVE OF ACTUAL PROJECT QUANTITIES. REFER TO FLOOR PLANS AND ENLARGED FLOOR PLANS FOR ACTUAL QUANTITIES AND LOCATIONS OF DEVICES AND MORE SPECIFIC ROUTING INFORMATION. REFER TO SPECIFICATIONS FOR ADDITIONAL REQUIREMENTS.
2. ALL CONDUCTORS IN THE TECHNOLOGY BONDING SYSTEM SHALL BE MINIMUM SIZE OF 3/0 AWG [PLENUM RATED] COPPER (GREEN OR MARKED WITH A DISTINCTIVE GREEN COLOR) UNLESS CONDUCTOR LENGTH IS LESS THAN 66 FEET. REFER TO BONDING CONDUCTOR SIZING SCHEDULE FOR SIZING CRITERIA FOR CONDUCTORS LESS THAN 66 FEET IN LENGTH. REFER TO SPECIFICATIONS FOR ADDITIONAL REQUIREMENTS.
3. ALL BONDING CONDUCTORS AND BONDING JUMPERS SHALL BE CONNECTED BY COMPRESSION LUGS, EXOTHERMIC WELDING, OR IRREVERSIBLE COMPRESSION CONNECTORS. SOLDER IS NOT AN ACCEPTABLE MEANS OF CONNECTION. SHEET METAL SCREWS SHALL NOT BE USED TO CONNECT COMMUNICATIONS BONDING CONDUCTORS TO EQUIPMENT. WHERE NECESSARY, REMOVE PAINT AND/OR USE PAINT-PIERCING WASHERS TO PROVIDE PROPER ELECTRICAL BOND AT ALL CONNECTIONS.
4. REFER TO 3/E-13 FOR BONDING BUS BAR DETAIL AND ADDITIONAL INFORMATION AND REQUIREMENTS FOR SC-GND-1.

KEYNOTES:

1. REFER TO TELECOM ROOM REFERENCES SCHEDULE ON DRAWING E-1 FOR TELECOMMUNICATIONS ROOM NUMBER AND LOCATION INFORMATION.
2. INCLUDES HORIZONTAL AND VERTICAL CONDUIT SLEEVES FOR TECHNOLOGY CABLING.
3. TELECOMMUNICATIONS BONDING BACKBONE (TBB). REFER TO 4/E-13 FOR TELECOMMUNICATIONS BONDING RISER DIAGRAM.
4. REFER TO THE ELECTRICAL DRAWINGS FOR LOCATION.

C:\Revit Local Files\MEP15_14.0872.00 - Fermi Lab - Far Detector_CENTRAL_wellsma.rvt

3/2/2015 5:17:52 PM

REV.	DATE	REVISIONS
5	03/02/15	ISSUED FOR 90% REVIEW
4	02/23/15	ISSUED FOR 90% COST ESTIMATE
3	01/26/15	ISSUED FOR 60% REVIEW
2	01/16/15	ISSUED FOR PRICING
1	12/23/14	SCHEMATIC DESIGN

KJWW ENGINEERING CONSULTANTS
The FUTURE. Built SMARTER.®
1100 WARRENVILLE ROAD, SUITE 400W
NAPERVILLE, ILLINOIS 60563
630.527.2320 FAX: 630.527.2321
www.kjww.com
PROJECT #:
Illinois Design Firm Registration #184-000973

KJWW ENGINEERING RESERVES PROPRIETARY RIGHTS, INCLUDING COPYRIGHTS, TO THIS DRAWING AND THE DATA SHOWN THEREON. SAID DRAWING AND/OR DATA ARE THE EXCLUSIVE PROPERTY OF KJWW ENGINEERING AND SHALL NOT BE USED OR REPRODUCED FOR ANY OTHER PROJECT WITHOUT THE EXPRESS WRITTEN APPROVAL AND PARTICIPATION OF KJWW ENGINEERING. © 2015 KJWW, P.C.

REFERENCE SCALE IN INCHES
0 1 2 3

	FERMI LAB	DATE
DESIGNED	T. BALA	3/2/2015
DRAWN	M. WELLS	3/2/2015
CHECKED		
APPROVED		
SUBMITTED		

SCALE:

NOT FOR CONSTRUCTION

FERMI NATIONAL ACCELERATOR LABORATORY

UNITED STATES DEPARTMENT OF ENERGY

SBN FAR DETECTOR BUILDING

ELECTRICAL DETAILS

DRAWING NO. 6-7-93 E-13 REV. 5

02 MAR. 2015

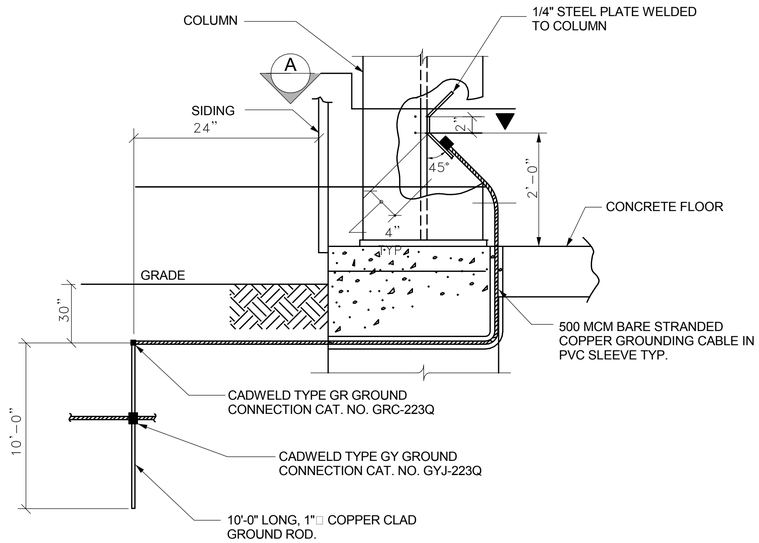

GROUND ROD DETAIL

NO SCALE

1 / E-14

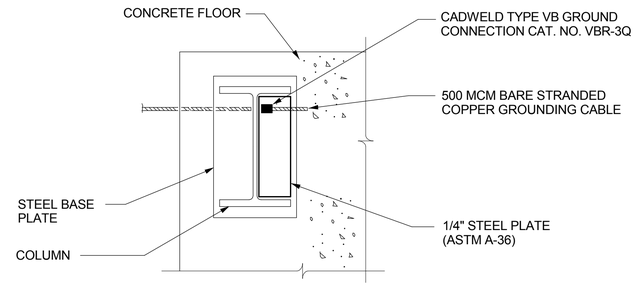

SECTION

NO SCALE

A / -

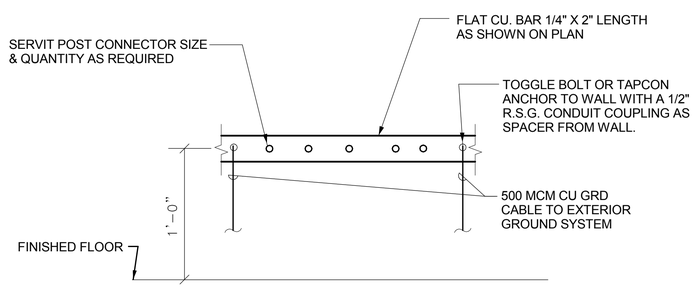

GROUND BAR

NO SCALE

2 / E-14

C:\Revit Local Files\MEP15_14.0872.00 - Fermi Lab - Far Detector_CENTRAL_wellsma.rvt

3/2/2015 5:17:52 PM

REV.	DATE	REVISIONS
5	03/02/15	ISSUED FOR 90% REVIEW
4	02/23/15	ISSUED FOR 90% COST ESTIMATE
3	01/26/15	ISSUED FOR 60% REVIEW
2	01/16/15	ISSUED FOR PRICING
1	12/23/14	SCHEMATIC DESIGN

KJWW ENGINEERING CONSULTANTS
The FUTURE Built SMARTER.®
1100 WARRENVILLE ROAD, SUITE 400W
NAPERVILLE, ILLINOIS 60563
630.527.2320 FAX: 630.527.2321
www.kjww.com
PROJECT #:
Illinois Design Firm Registration #184-000973

KJWW ENGINEERING RESERVES PROPRIETARY RIGHTS, INCLUDING COPYRIGHTS, TO THIS DRAWING AND THE DATA SHOWN THEREON. SAID DRAWING AND/OR DATA ARE THE EXCLUSIVE PROPERTY OF KJWW ENGINEERING AND SHALL NOT BE USED OR REPRODUCED FOR ANY OTHER PROJECT WITHOUT THE EXPRESS WRITTEN APPROVAL AND PARTICIPATION OF KJWW ENGINEERING. © 2015 KJWW, P.C.

REFERENCE SCALE IN INCHES
0 1 2 3

FERMI LAB		DATE
DESIGNED	T. BALA	3/2/2015
DRAWN	M. WELLS	3/2/2015
CHECKED		
APPROVED		
SUBMITTED		

SCALE:

NOT FOR CONSTRUCTION

FERMI NATIONAL ACCELERATOR LABORATORY

UNITED STATES DEPARTMENT OF ENERGY

SBN FAR DETECTOR BUILDING

ELECTRICAL DETAILS

DRAWING NO. **6-7-93** **E-14** REV. **5**

02 MAR. 2015

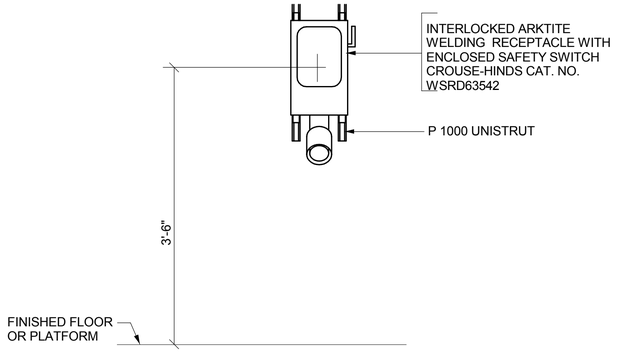

WELDING OUTLET DETAIL

SCALE N.T.S.

1 / E-15

NOTES

1. ALL UNISTRUT SHALL BE GALVANIZED.

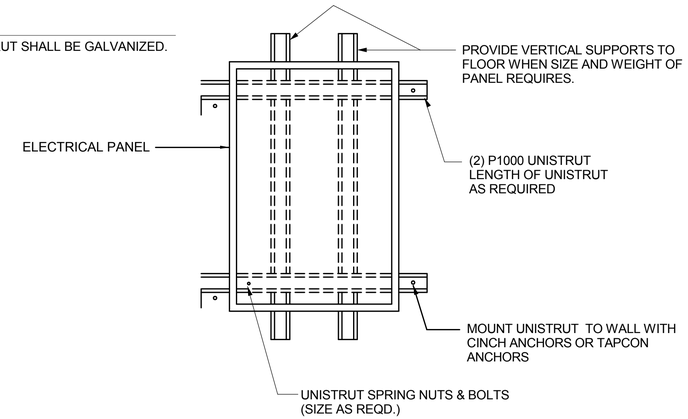

TYPICAL MOUNTING DETAIL OF PANEL

SCALE N.T.S.

2 / E-15

C:\Revit Local Files\MEP15_14.0872.00 - Fermi Lab - Far Detector_CENTRAL_wellsma.rvt

3/2/2015 5:17:53 PM

REV.	DATE	REVISIONS
5	03/02/15	ISSUED FOR 90% REVIEW
4	02/23/15	ISSUED FOR 90% COST ESTIMATE
3	01/26/15	ISSUED FOR 60% REVIEW
2	01/16/15	ISSUED FOR PRICING
1	12/23/14	SCHEMATIC DESIGN

KJWW ENGINEERING CONSULTANTS
The FUTURE Built SMARTER.®
1100 WARRENVILLE ROAD, SUITE 400W
NAPERVILLE, ILLINOIS 60563
630.527.2320 FAX: 630.527.2321
www.kjww.com
PROJECT #:
Illinois Design Firm Registration #184-000973

KJWW ENGINEERING RESERVES PROPRIETARY RIGHTS, INCLUDING COPYRIGHTS, TO THIS DRAWING AND THE DATA SHOWN THEREON. SAID DRAWING AND/OR DATA ARE THE EXCLUSIVE PROPERTY OF KJWW ENGINEERING AND SHALL NOT BE USED OR REPRODUCED FOR ANY OTHER PROJECT WITHOUT THE EXPRESS WRITTEN APPROVAL AND PARTICIPATION OF KJWW ENGINEERING. © 2015 KJWW, P.C.

REFERENCE SCALE IN INCHES
0 1 2 3

	FERMI LAB	DATE
DESIGNED	T. BALA	3/2/2015
DRAWN	M. WELLS	3/2/2015
CHECKED		
APPROVED		
SUBMITTED		

SCALE:

NOT FOR CONSTRUCTION

FERMI NATIONAL ACCELERATOR LABORATORY

UNITED STATES DEPARTMENT OF ENERGY

SBN FAR DETECTOR BUILDING

ELECTRICAL DETAILS

DRAWING NO. 6-7-93 E-15 REV. 5

02 MAR. 2015

PANEL NAME: EPP-SFDBA1-A1

TYPE: BOLT-ON
MOUNTING: SURFACE
FED FROM: EDHP-SFDBA1-1
SCCR:
LOCATION: GRADE LEVEL

SOLID NEUTRAL
GROUND BUS

CONNECTED 29.8 kVA
MAIN: 225 A/MCB
VOLTS: 120/208 Wye
PHASE: 3
WIRE: 4
DEMAND: 29.8 kVA

Panel Notes: UNLESS NOTED OTHERWISE, ALL NEW CIRCUITS SHALL HAVE 2#12 & 1#12 GND IN 3/4" C., USE #10 FOR CIRCUIT HOMERUN LENGTHS OVER 75 FEET.

	CKT NO.	LOAD DESCRIPTION	AMP	POLES	A		B		C		POLES	AMP	LOAD DESCRIPTION	CKT NO.	
	1	Lighting	20 A	1	0.9	0.9					1	20 A	Lighting	2	
	3	Lighting	20 A	1			0.56	0.91			1	20 A	Lighting	4	
	5	Lighting	20 A	1					0.91	1.17	1	20 A	Lighting	6	
	7	Lighting	20 A	1	1.17	0.17					1	20 A	Lighting	8	
	9	Lighting	20 A	1			1.77	1.51			1	20 A	Lighting	10	
	11	Lighting	20 A	1					1.33	0.32	1	20 A	Lighting	12	
	13	Lighting	20 A	1	0.66	0.12					1	20 A	Lighting	14	
	15	MOD-1	20 A	1			1	0.2			1	20 A	LCP - SFDB	16	
	17	VESDA-SFDB2	20 A	1					0.2	1	1	20 A	FACP-SFDB	18	
	19	VESDA-SFDB1	20 A	1	0.2	0.75					2	20 A	GENERATOR BLOCK HEATER	20	
*O	21	UPS-EPP-SFDBA1-A1	70 A	3			3.33	0.75			--	--	--	22	--
--	23	--	--	--					3.33	1	1	20 A	GENERATOR BATTERY CHARGER	24	
--	25	--	--	--	3.33	1					1	20 A	GENERATOR BATTERY HEATER	26	
	27	OVER HEAD DOOR	20 A	1			1.5	0			1	20 A	SPARE	28	
	29	SPARE	20 A	1					0	0	1	20 A	SPARE	30	
	31	SPARE	20 A	1	0	0					1	20 A	SPARE	32	
	33	SPARE	20 A	1			0	0			1	20 A	SPARE	34	
	35	SPARE	20 A	1					0	0	1	20 A	SPARE	36	
	37	SPARE	20 A	1	0	0					1	20 A	SPARE	38	
	39	SPARE	20 A	1			0	0			1	20 A	SPARE	40	
	41	SPARE	20 A	1					0	0	1	20 A	SPARE	42	
				Total Load:	9.2 kVA		11.53 kVA		9.26 kVA						
				Total Amps:	76.69		96.13		77.27						

[Key*:] *O=REFER TO ONE LINE DIAGRAM FOR WIRE SIZE

PANEL NAME: PHP-SFDBA1-1

TYPE: BOLT-ON
MOUNTING: RECESSED
FED FROM: DHP-SFDBA1
SCCR:
LOCATION: GRADE LEVEL

SOLID NEUTRAL
GROUND BUS

CONNECTED 195 kVA
MAIN: 400 A/MLO
VOLTS: 480/277 Wye
PHASE: 3
WIRE: 4
DEMAND: 195 kVA

Panel Notes:

	CKT NO.	LOAD DESCRIPTION	AMP	POLES	A		B		C		POLES	AMP	LOAD DESCRIPTION	CKT NO.	
	1	WELDING OUTLET (3#8 & 1#8 GND IN 1"C.)	50 A	3	11	11					3	50 A	WELDING OUTLET (3#8 & 1#8 GND IN 1"C.)	2	
--	3	--	--	--			11	11			--	--	--	4	--
--	5	--	--	--					11	11	--	--	--	6	--
	7	WELDING OUTLET (3#8 & 1#8 GND IN 1"C.)	50 A	3	11	11					3	50 A	WELDING OUTLET (3#8 & 1#8 GND IN 1"C.)	8	
--	9	--	--	--			11	11			--	--	--	10	--
--	11	--	--	--					11	11	--	--	--	12	--
	13	WELDING OUTLET (3#8 & 1#8 GND IN 1"C.)	50 A	3	11	3.33					3	20 A	CAB-1(10 KW) (4#12 & 1#12 GND IN 3/4" C.)	14	
--	15	--	--	--			11	3.33			--	--	--	16	--
--	17	--	--	--					11	3.33	--	--	--	18	--
	19	CAB-2 (10 KW) (4#12 & 1#12 GND IN 3/4" C.)	20 A	3	3.33	3.33					3	20 A	CAB-3 (10 KW) (4#12 & 1#12 GND IN 3/4" C.)	20	
--	21	--	--	--			3.33	3.33			--	--	--	22	--
--	23	--	--	--					3.33	3.33	--	--	--	24	--
	25	SPARE	50 A	3	0	0					3	50 A	SPARE	26	
--	27	--	--	--			0	0			--	--	--	28	--
--	29	--	--	--					0	0	--	--	--	30	--
	31	SPARE	20 A	3	0	0					3	20 A	SPARE	32	
--	33	--	--	--			0	0			--	--	--	34	--
--	35	--	--	--					0	0	--	--	--	36	--
--	37	SPACE	--	--	0	0					--	--	SPACE	38	--
--	39	SPACE	--	--			0	0			--	--	SPACE	40	--
--	41	SPACE	--	--					0	0	--	--	SPACE	42	--
				Total Load:	65 kVA		65 kVA		65 kVA						
				Total Amps:	234.66		234.66		234.66						

[Key*:]

PANEL NAME: EPP-UPS-SFDBA1-A1-1

TYPE: BOLT-ON
MOUNTING: SURFACE
FED FROM: PANEL 'EPP-SFDBA1-A1' VIA UPS
SCCR: 10,000
LOCATION: ENCLOSURE LEVEL

SOLID NEUTRAL
GROUND BUS

CONNECTED 0 kVA
MAIN: 125 A/MLO
VOLTS: 120/208 Wye
PHASE: 3
WIRE: 4
DEMAND: 0 kVA

Panel Notes: UNLESS NOTED OTHERWISE, ALL NEW CIRCUITS SHALL HAVE 2#12 & 1#12 GND IN 3/4" C., USE #10 FOR CIRCUIT HOMERUN LENGTHS OVER 75 FEET.

	CKT NO.	LOAD DESCRIPTION	AMP	POLES	A		B		C		POLES	AMP	LOAD DESCRIPTION	CKT NO.	
	1	SPARE	20 A	1	0	0					1	20 A	SPARE	2	
	3	SPARE	20 A	1			0	0			1	20 A	SPARE	4	
	5	SPARE	20 A	1					0	0	1	20 A	SPARE	6	
	7	SPARE	20 A	1	0	0					1	20 A	SPARE	8	
	9	SPARE	20 A	1			0	0			1	20 A	SPARE	10	
	11	SPARE	20 A	1					0	0	1	20 A	SPARE	12	
	13	SPARE	20 A	1	0	0					1	20 A	SPARE	14	
	15	SPARE	20 A	1			0	0			1	20 A	SPARE	16	
--	17	SPACE	--	--					0	0	--	--	SPACE	18	--
--	19	SPACE	--	--	0	0					--	--	SPACE	20	--
--	21	SPACE	--	--			0	0			--	--	SPACE	22	--
--	23	SPACE	--	--					0	0	--	--	SPACE	24	--
--	25	SPACE	--	--	0	0					--	--	SPACE	26	--
--	27	SPACE	--	--			0	0			--	--	SPACE	28	--
--	29	SPACE	--	--					0	0	--	--	SPACE	30	--
				Total Load:	0 kVA		0 kVA		0 kVA						
				Total Amps:	0		0		0						

[Key*:]

NOTE : BRANCH CONNECTIONS FROM THIS PANEL WILL BE DONE BY FERMILAB

TYPICAL NAMEPLATE ARRANGEMENT

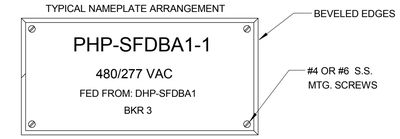

FERMILAB
PANELBOARD AND TRANSFORMER LABELING

PANELBOARDS AND TRANSFORMERS OF THE DISTRIBUTION SYSTEM SHALL BE UNIQUELY IDENTIFIED WITH LABELS BE MADE FROM ENGRAVED PLASTIC LAMOCOID MATERIAL AND GENERALLY 1/16 INCH THICK, 2.5 INCHES HIGH, AND A MINIMUM 9 INCHES WIDE. THE OVERALL DIMENSIONS MAY BE REDUCED FOR CASES WHERE THE EQUIPMENT CANNOT ACCOMMODATE THE STANDARD SIZE.

THESE LABELS GENERALLY HAVE TWO LINES OF TEXT. THE FIRST LINE WOULD BE THE PANELBOARD OR TRANSFORMER NAME (E.G. PHP-MI60A-3, TR-MI60A-3-A). THE SECOND LINE WOULD DESCRIBE THE OPERATING VOLTAGES OR VOLTAGES PRESENT (E.G. 480Y/277 VAC, 480-208Y/120 VAC).

FIRST LINE CHARACTERS ARE TO BE 0.85 TO 1.0 INCH HIGH WITH A 1/8 INCH LINE WIDTH. SECOND LINE CHARACTERS ARE 0.5 INCHES HIGH WITH A 1/16 INCH LINE WIDTH. THE EDGES OF THE LABEL ARE TO BE BEVELED.

RED LABELS WITH **WHITE** CHARACTERS SHALL BE USED FOR EQUIPMENT OPERATING AT 480Y/277 OR 480 VAC OR HIGHER. A 480 TO 208Y/120 VAC TRANSFORMER WOULD BE OUTFITTED WITH A LABEL HAVING THESE COLORS. WHEN SUCH EQUIPMENT IS CAPABLE OF BEING POWERED BY A DEDICATED EMERGENCY OR STANDBY POWER SOURCE, THE EQUIPMENT LABEL SHALL BE **ORANGE** IN COLOR WITH **BLACK** CHARACTERS.

BLACK LABELS WITH **WHITE** CHARACTERS SHALL BE USED FOR EQUIPMENT OPERATING AT 120,208Y/120, OR 240/120 VAC. WHEN SUCH EQUIPMENT IS CAPABLE OF BEING POWERED BY A DEDICATED EMERGENCY OR STANDBY POWER SOURCE, THE EQUIPMENT LABEL SHALL BE **YELLOW** IN COLOR WITH **BLACK** CHARACTERS.

EQUIPMENT LABELS ARE PREFERABLY ATTACHED WITH A HIGH QUALITY, DOUBLE-SIDED ADHESIVE TAPE RATHER THAN SCREWS. FOR INDOOR APPLICATIONS TO SMOOTH SURFACES, 3M TAPE 9500PC IS A PREFERRED CHOICE. FOR OUTDOOR OR ROUGHER SURFACE APPLICATIONS, NORMOUNT TAPE V2830 IS A PREFERRED CHOICE ALTHOUGH THE 9500PC TAPE IS OFTEN ACCEPTABLE.

PANELBOARD NOTES

1. PHASE ROTATION SHALL BE: INCOMING A-B-C LEFT-TO-RIGHT. LEFT SIDE BREAKERS SHALL BE A-B-C, TOP-TO-BOTTOM. I-LINE RIGHT SIDE BREAKERS SHALL BE C-B-A, TOP-TO-BOTTOM.
2. PANELBOARDS SHALL USE PLATED COPPER BUS. NEUTRAL AND GROUNDING BLOCKS SHALL BE PLATED COPPER ONLY. ALUMINUM IS PROHIBITED.
3. ALL ELECTRICAL PANELBOARDS SHALL USE HINGED TRIM AND HAVE A HINGED DOOR OVER THE BREAKER COMPARTMENT FOR EASY ACCESS.
4. ALL CIRCUIT BREAKER SPACES SHALL BE NUMBERED. THE PANELBOARD DIRECTORY SHALL BE NEATLY TYPED TO CORRESPOND TO THE BREAKER NUMBERS AND FUNCTION.
5. ALL PANELBOARDS TRIMS SHALL BE ARRANGED TO OPEN TO THE RIGHT-HAND SIDE UNLESS NOTED OTHERWISE.
6. PANELBOARD NAMEPLATES SHALL BE PLASTIC ENGRAVED LAMACOID MATERIAL WITH S.S. MOUNTING SCREWS.
7. ALL CIRCUIT BREAKERS SHALL HAVE PERMANENTLY MOUNTED LOCKING HASP.

REV.	DATE	REVISIONS
5	03/02/15	ISSUED FOR 90% REVIEW
4	02/23/15	ISSUED FOR 90% COST ESTIMATE
3	01/26/15	ISSUED FOR 60% REVIEW
2	01/16/15	ISSUED FOR PRICING
1	12/23/14	SCHEMATIC DESIGN

KJWW ENGINEERING CONSULTANTS
The FUTURE Built SMARTER
1100 WARRENVILLE ROAD, SUITE 400W
NAPERVILLE, ILLINOIS 60563
630.527.2320 FAX: 630.527.2321
www.kjww.com
PROJECT #:
Illinois Design Firm Registration #184-000973

KJWW ENGINEERING RESERVES PROPRIETARY RIGHTS, INCLUDING COPYRIGHTS, TO THIS DRAWING AND THE DATA SHOWN THEREON. SAID DRAWING AND/OR DATA ARE THE EXCLUSIVE PROPERTY OF KJWW ENGINEERING AND SHALL NOT BE USED OR REPRODUCED FOR ANY OTHER PROJECT WITHOUT THE EXPRESS WRITTEN APPROVAL AND PARTICIPATION OF KJWW ENGINEERING. © 2015 KJWW, P.C.

REFERENCE SCALE IN INCHES
0 1 2 3

FERMI LAB		DATE
DESIGNED	T. BALA	3/2/2015
DRAWN	M. WELLS	3/2/2015
CHECKED		
APPROVED		
SUBMITTED		

SCALE:

NOT FOR CONSTRUCTION

FERMI NATIONAL ACCELERATOR LABORATORY
UNITED STATES DEPARTMENT OF ENERGY

SBN FAR DETECTOR BUILDING
PANEL SCHEDULES

DRAWING NO. **6-7-93** **E-16** REV. **5**

02 MAR. 2015

C:\Revit Local Files\MEP15_14.0872.00 - Fermi Lab - Far Detector_CENTRAL_wellsma.rvt
3/2/2015 5:17:53 PM

PANEL NAME: PP-SFDBA1-A1

TYPE: BOLT-ON
MOUNTING: SURFACE
FED FROM: DHP-SFDBA1 VIA TR-SFDBA1-A
SCCR: 10,000
LOCATION: GRADE LEVEL

200% SOLID NEUTRAL
GROUND BUS

CONNECTED 0 kVA
MAIN: 400 A/MLO
VOLTS: 120/208 Wye
PHASE: 3
WIRE: 4

Panel Notes: UNLESS NOTED OTHERWISE, ALL NEW CIRCUITS SHALL HAVE 2#12 & 1#12 GND IN 3/4" C., USE #10 FOR CIRCUIT HOMERUN LENGTHS OVER 75 FEET.

	CKT NO.	LOAD DESCRIPTION	AMP	POLES	A		B		C		POLES	AMP	LOAD DESCRIPTION	CKT NO.	
	1	BUILDING RACK #1	20 A	1	0	0					1	20 A	BUILDING RACK #2	2	
	3	BUILDING RACK #2	20 A	1			0	0			1	20 A	BUILDING RACK #3	4	
	5	BUILDING RACK #5	20 A	1					0	0	1	20 A	BUILDING RACK #6	6	
	7	BUILDING RACK #7	20 A	1	0	0					1	20 A	BUILDING RACK #8	8	
	9	BUILDING RACK #9	20 A	1			0	0			1	20 A	BUILDING RACK #10	10	
	11	BUILDING RACK #11	20 A	1					0	0	1	20 A	SPARE	12	
	13	SPARE	20 A	1	0	0					1	20 A	SPARE	14	
	15	SPARE	20 A	1			0	0			1	20 A	SPARE	16	
	17	SPARE	20 A	1					0	0	1	20 A	SPARE	18	
	19	SPARE	20 A	1	0	0					1	20 A	SPARE	20	
	21	SPARE	30 A	3			0	0			3	30 A	SPARE	22	
--	23	--	--	--					0	0	--	--	--	24	--
--	25	--	--	--	0	0					--	--	--	26	--
	27	SPARE	30 A	3			0	0			3	30 A	SPARE	28	
--	29	--	--	--					0	0	--	--	--	30	--
--	31	--	--	--	0	0					--	--	--	32	--
--	33	SPACE	--	--			0	0			--	--	SPACE	34	--
--	35	SPACE	--	--					0	0	--	--	SPACE	36	--
--	37	SPACE	--	--	0	0					--	--	SPACE	38	--
--	39	SPACE	--	--			0	0			--	--	SPACE	40	--
--	41	SPACE	--	--					0	0	--	--	SPACE	42	--
				Total Load:	0 kVA		0 kVA		0 kVA						
				Total Amps:	0		0		0						

[Key*:]

NOTE : BRANCH CONNECTIONS FROM THIS PANEL TO BUILDING RACKS WILL BE DONE BY FERMILAB

PANEL NAME: PP-SFDBA1-C1

TYPE: BOLT-ON
MOUNTING: SURFACE
FED FROM: DHP-SFDBA1 VIA TR-SFDBA1-C
SCCR: 10,000
LOCATION: DETECTOR LEVEL

200% SOLID NEUTRAL
GROUND BUS

CONNECTED 0 kVA
MAIN: 400 A/MLO
VOLTS: 120/208 Wye
PHASE: 3
WIRE: 4

Panel Notes: UNLESS NOTED OTHERWISE, ALL NEW CIRCUITS SHALL HAVE 2#12 & 1#12 GND IN 3/4" C., USE #10 FOR CIRCUIT HOMERUN LENGTHS OVER 75 FEET.

	CKT NO.	LOAD DESCRIPTION	AMP	POLES	A		B		C		POLES	AMP	LOAD DESCRIPTION	CKT NO.	
	1	CR40 HEATER	20 A	3	0	0					3	20 A	CR40 HEATER	2	
--	3	--	--	--			0	0			--	--	--	4	--
--	5	--	--	--					0	0	--	--	--	6	--
	7	FILTER HEATER	30 A	3	0	0					3	20 A	S/E VE HEATER	8	
--	9	--	--	--			0	0			--	--	--	10	--
--	11	--	--	--					0	0	--	--	--	12	--
	13	TURBO PUMP #1	20 A	1	0	0					1	20 A	VACUUM PUMP #1	14	
	15	TURBO PUMP #2	20 A	1			0	0			1	20 A	VACUUM PUMP #2	16	
	17	WATER PUMP	20 A	1					0	0	1	20 A	SPARE	18	
	19	GAS ANALYZER #1	20 A	1	0	0					1	20 A	SPARE	20	
	21	GAS ANALYZER #2	20 A	1			0	0			1	20 A	SPARE	22	
	23	SPARE	20 A	1					0	0	1	20 A	SPARE	24	
	25	SPARE	20 A	1	0	0					1	20 A	SPARE	26	
	27	SPARE	20 A	1			0	0			1	20 A	SPARE	28	
	29	SPARE	20 A	1					0	0	1	20 A	SPARE	30	
	31	SPARE	20 A	1	0	0					--	--	SPACE	32	--
--	33	SPACE	--	--			0	0			--	--	SPACE	34	--
--	35	SPACE	--	--					0	0	--	--	SPACE	36	--
--	37	SPACE	--	--	0	0					--	--	SPACE	38	--
--	39	SPACE	--	--			0	0			--	--	SPACE	40	--
--	41	SPACE	--	--					0	0	--	--	SPACE	42	--
				Total Load:	0 kVA		0 kVA		0 kVA						
				Total Amps:	0		0		0						

[Key*:]

NOTE : BRANCH CONNECTIONS FROM THIS PANEL WILL BE DONE BY FERMILAB

PANEL NAME: PP-SFDBA1-B1

TYPE: BOLT-ON
MOUNTING: SURFACE
FED FROM: DHP-SBNA1 VIA TR-SBNA1-B
SCCR:
LOCATION: GRADE LEVEL

SOLID NEUTRAL
GROUND BUS

CONNECTED 54.8 kVA
MAIN: 400 A/MLO
VOLTS: 120/208 Wye
PHASE: 3
WIRE: 4
DEMAND: 54.75 kVA

Panel Notes:

	CKT NO.	LOAD DESCRIPTION	AMP	POLES	A		B		C		POLES	AMP	LOAD DESCRIPTION	CKT NO.	
	1	Receptacles	20 A	1	0.4	0.4					1	20 A	Receptacles	2	
	3	Receptacles	20 A	1			0.4	0.4			1	20 A	Receptacles	4	
	5	Receptacles	20 A	1					0.4	0.4	1	20 A	Receptacles	6	
	7	Receptacles	20 A	1	0.4	0.4					1	20 A	Receptacles	8	
	9	Receptacles	20 A	1			0.4	0.4			1	20 A	Receptacles	10	
	11	Receptacles	20 A	1					0.8	0.4	1	20 A	Receptacles	12	
	13	Receptacles	20 A	1	0.4	0.2					1	20 A	PLUMBING TRANSFORMER	14	
	15	Receptacles	20 A	1			0.4	0.15			1	20 A	EF-3 (1/3 HP)	16	
	17	Receptacles	20 A	1					0.4	0.2	1	20 A	Receptacles	18	
	19	Receptacles	20 A	1	0.4	0.4					1	20 A	Receptacles	20	
	21	Receptacles	20 A	1			0.4	0.4			1	20 A	Receptacles	22	
	23	Receptacles	20 A	1					0.4	0.4	1	20 A	Receptacles	24	
	25	Receptacles	20 A	1	0.4	0.4					1	20 A	Receptacles	26	
	27	Receptacles	20 A	1			0.4	0.4			1	20 A	Receptacles	28	
	29	Receptacles	20 A	1					0.4	0.4	1	20 A	Receptacles	30	
	31	Receptacles	20 A	1	0.4	0.4					1	20 A	Receptacles	32	
	33	Receptacles	20 A	1			0.4	0.8			1	20 A	Receptacles	34	
	35	Receptacles	20 A	1					0.4	0.6	1	20 A	Receptacles	36	
	37	Receptacles	20 A	1	1	1					2	20 A	UH-3	38	
	39	UH-4	20 A	2			1	1			--	--	--	40	--
--	41	--	--	--					1	1	2	20 A	UH-5	42	
*W1	43	TRANSFORMER HEATER	20 A	1	1	1					--	--	--	44	--
*W1	45	TRANSFORMER HEATER	20 A	1			1	3.25			2	40 A	WH-1 (6.5 KW) (2#8 & 1#10 GND IN 3/4" C.)	46	
	47	SPARE	20 A	1					0	3.25	--	--	--	48	--
	49	WH-1 (6.5 KW) (2#8 & 1#10 GND IN 3/4" C.)	40 A	2	3.25	0					1	20 A	SPARE	50	
--	51	--	--	--			3.25	0			1	20 A	SPARE	52	
	53	WH-2 (18 KW) (3#4 & 1#8 GND IN 1" C.)	70 A	3					6	0	1	20 A	SPARE	54	
--	55	--	--	--	6	0					1	20 A	SPARE	56	
--	57	--	--	--			6	0			1	20 A	SPARE	58	
	59	SPARE	20 A	1					0	0	1	20 A	SPARE	60	
	61	SPARE	20 A	1	0	0					1	20 A	SPARE	62	
	63	SPARE	20 A	1			0	0			1	20 A	SPARE	64	
	65	SPARE	20 A	1					0	0	1	20 A	SPARE	66	
	67	SPARE	20 A	1	0	0					1	20 A	SPARE	68	
	69	SPARE	20 A	1			0	0			1	20 A	SPARE	70	
	71	SPARE	20 A	1					0	0	--	--	SPACE	72	--
--	73	SPACE	--	--	0	0					--	--	SPACE	74	--
--	75	SPACE	--	--			0	0			--	--	SPACE	76	--
--	77	SPACE	--	--					0	0	--	--	SPACE	78	--
--	79	SPACE	--	--	0	0					--	--	SPACE	80	--
--	81	SPACE	--	--			0	0			--	--	SPACE	82	--
--	83	SPACE	--	--					0	0	--	--	SPACE	84	--
				Total Load:	17.85 kVA		20.45 kVA		16.45 kVA						
				Total Amps:	150.54		172.21		137.08						

[Key*:] *W1=2#10 & 1#10 GND IN 3/4" C.

C:\Revit Local Files\MEP15_14.0872.00 - Fermi Lab - Far Detector_CENTRAL_wellsma.rvt

3/2/2015 5:17:54 PM

REV.	DATE	
5	03/02/15	ISSUED FOR 90% REVIEW
4	02/23/15	ISSUED FOR 90% COST ESTIMATE
3	01/26/15	ISSUED FOR 60% REVIEW
2	01/16/15	ISSUED FOR PRICING
1	12/23/14	SCHEMATIC DESIGN

REVISIONS

KJWW ENGINEERING CONSULTANTS
The FUTURE. Built SMARTER.®
1100 WARRENVILLE ROAD, SUITE 400W
NAPERVILLE, ILLINOIS 60563
630.527.2320 FAX: 630.527.2321
www.kjww.com
PROJECT #:
Illinois Design Firm Registration #184-000973

KJWW ENGINEERING RESERVES PROPRIETARY RIGHTS, INCLUDING COPYRIGHTS, TO THIS DRAWING AND THE DATA SHOWN THEREON. SAID DRAWING AND/OR DATA ARE THE EXCLUSIVE PROPERTY OF KJWW ENGINEERING AND SHALL NOT BE USED OR REPRODUCED FOR ANY OTHER PROJECT WITHOUT THE EXPRESS WRITTEN APPROVAL AND PARTICIPATION OF KJWW ENGINEERING. © 2015 KJWW, P.C.

REFERENCE SCALE IN INCHES
0 1 2 3

	FERMI LAB	DATE
DESIGNED	T. BALA	3/2/2015
DRAWN	M. WELLS	3/2/2015
CHECKED		
APPROVED		
SUBMITTED		

SCALE:

NOT FOR CONSTRUCTION

FERMI NATIONAL ACCELERATOR LABORATORY
UNITED STATES DEPARTMENT OF ENERGY

SBN FAR DETECTOR BUILDING
PANEL SCHEDULES

DRAWING NO. **6-7-93** **E-17** REV. **5**

02 MAR. 2015

PANEL NAME: PP-SFDBB1-A1

CONNECTED 14.4 kVA

TYPE: BOLT-ON
MOUNTING: SURFACE
FED FROM: 'DHP-SFDBB1' VIA 'TR-SFDBB1-A'
SCCR: 10,000
LOCATION: MEZZANINE

200% SOLID NEUTRAL
GROUND BUS

MAIN: 400 A/MLO
VOLTS: 120/208 Wye
PHASE: 3
WIRE: 4

Panel Notes: UNLESS NOTED OTHERWISE, ALL NEW CIRCUITS SHALL HAVE 4#10 & 1#10 GND IN 3/4" C.

	CKT NO.	LOAD DESCRIPTION	AMP	POLES	A		B		C		POLES	AMP	LOAD DESCRIPTION	CKT NO.	
	1	DETECTOR POWER RACK 1	30 A	3	0.8	0.8					3	30 A	DETECTOR POWER RACK 2	2	
--	3	--	--	--			0.8	0.8			--	--	--	4	--
--	5	--	--	--					0.8	0.8	--	--	--	6	--
	7	DETECTOR POWER RACK 3	30 A	3	0.8	0.8					3	30 A	DETECTOR POWER RACK 4	8	
--	9	--	--	--			0.8	0.8			--	--	--	10	--
--	11	--	--	--					0.8	0.8	--	--	--	12	--
	13	DETECTOR POWER RACK 5	30 A	3	0.8	0.8					3	30 A	DETECTOR POWER RACK 6	14	
--	15	--	--	--			0.8	0.8			--	--	--	16	--
--	17	--	--	--					0.8	0.8	--	--	--	18	--
	19	SPARE	30 A	3	0	0					3	30 A	SPARE	20	
--	21	--	--	--			0	0			--	--	--	22	--
--	23	--	--	--					0	0	--	--	--	24	--
	25	SPARE	30 A	3	0	0					3	30 A	SPARE	26	
--	27	--	--	--			0	0			--	--	--	28	--
--	29	--	--	--					0	0	--	--	--	30	--
	31	SPARE	20 A	1	0	0					1	20 A	SPARE	32	
	33	SPARE	20 A	1			0	0			1	20 A	SPARE	34	
	35	SPARE	20 A	1					0	0	1	20 A	SPARE	36	
--	37	SPACE	--	--	0	0					--	--	SPACE	38	--
--	39	SPACE	--	--			0	0			--	--	SPACE	40	--
--	41	SPACE	--	--					0	0	--	--	SPACE	42	--
				Total Load:	4.8 kVA		4.8 kVA		4.8 kVA						
				Total Amps:	40		40		40						

[Key*:]

NOTE : BRANCH CONNECTIONS FROM THIS PANEL TO DETECTOR POWER RACKS WILL BE DONE BY FERMILAB

PANEL NAME: PP-SFDBB1-B1

CONNECTED 14.4 kVA

TYPE: BOLT-ON
MOUNTING: SURFACE
FED FROM: 'DHP-SFDBB1' VIA 'TR-SFDBB1-B'
SCCR: 10,000
LOCATION: MEZZANINE

200% SOLID NEUTRAL
GROUND BUS

MAIN: 400 A/MLO
VOLTS: 120/208 Wye
PHASE: 3
WIRE: 4

Panel Notes: UNLESS NOTED OTHERWISE, ALL NEW CIRCUITS SHALL HAVE 4#10 & 1#10 GND IN 3/4" C.

	CKT NO.	LOAD DESCRIPTION	AMP	POLES	A		B		C		POLES	AMP	LOAD DESCRIPTION	CKT NO.	
	1	DETECTOR POWER RACK 7	30 A	3	0.8	0.8					3	30 A	DETECTOR POWER RACK 8	2	
--	3	--	--	--			0.8	0.8			--	--	--	4	--
--	5	--	--	--					0.8	0.8	--	--	--	6	--
	7	DETECTOR POWER RACK 9	30 A	3	0.8	0.8					3	30 A	DETECTOR POWER RACK 10	8	
--	9	--	--	--			0.8	0.8			--	--	--	10	--
--	11	--	--	--					0.8	0.8	--	--	--	12	--
	13	DETECTOR POWER RACK 11	30 A	3	0.8	0.8					3	30 A	DETECTOR POWER RACK 12	14	
--	15	--	--	--			0.8	0.8			--	--	--	16	--
--	17	--	--	--					0.8	0.8	--	--	--	18	--
	19	SPARE	30 A	3	0	0					3	30 A	SPARE	20	
--	21	--	--	--			0	0			--	--	--	22	--
--	23	--	--	--					0	0	--	--	--	24	--
	25	SPARE	30 A	3	0	0					3	30 A	SPARE	26	
--	27	--	--	--			0	0			--	--	--	28	--
--	29	--	--	--					0	0	--	--	--	30	--
	31	SPARE	20 A	1	0	0					1	20 A	SPARE	32	
	33	SPARE	20 A	1			0	0			1	20 A	SPARE	34	
	35	SPARE	20 A	1					0	0	1	20 A	SPARE	36	
--	37	SPACE	--	--	0	0					--	--	SPACE	38	--
--	39	SPACE	--	--			0	0			--	--	SPACE	40	--
--	41	SPACE	--	--					0	0	--	--	SPACE	42	--
				Total Load:	4.8 kVA		4.8 kVA		4.8 kVA						
				Total Amps:	40		40		40						

[Key*:]

NOTE : BRANCH CONNECTIONS FROM THIS PANEL TO DETECTOR POWER RACKS WILL BE DONE BY FERMILAB

C:\Revit Local Files\MEP15_14.0872.00 - Fermi Lab - Far Detector_CENTRAL_wellsma.rvt

3/2/2015 5:17:55 PM

REV.	DATE	REVISIONS
5	03/02/15	ISSUED FOR 90% REVIEW
4	02/23/15	ISSUED FOR 90% COST ESTIMATE
3	01/26/15	ISSUED FOR 60% REVIEW
2	01/16/15	ISSUED FOR PRICING
1	12/23/14	SCHEMATIC DESIGN

KJWW ENGINEERING CONSULTANTS
The FUTURE. Built SMARTER.®
1100 WARRENVILLE ROAD, SUITE 400W
NAPERVILLE, ILLINOIS 60563
630.527.2320 FAX: 630.527.2321
www.kjww.com
PROJECT #:
Illinois Design Firm Registration #184-000973

KJWW ENGINEERING RESERVES PROPRIETARY RIGHTS, INCLUDING COPYRIGHTS, TO THIS DRAWING AND THE DATA SHOWN THEREON. SAID DRAWING AND/OR DATA ARE THE EXCLUSIVE PROPERTY OF KJWW ENGINEERING AND SHALL NOT BE USED OR REPRODUCED FOR ANY OTHER PROJECT WITHOUT THE EXPRESS WRITTEN APPROVAL AND PARTICIPATION OF KJWW ENGINEERING. © 2015 KJWW, P.C.

REFERENCE SCALE IN INCHES
0 1 2 3

	FERMI LAB	DATE
DESIGNED	T. BALA	3/2/2015
DRAWN	M. WELLS	3/2/2015
CHECKED		
APPROVED		
SUBMITTED		

SCALE:

NOT FOR CONSTRUCTION

FERMI NATIONAL ACCELERATOR LABORATORY

UNITED STATES DEPARTMENT OF ENERGY

SBN FAR DETECTOR BUILDING

PANEL SCHEDULES

DRAWING NO. **6-7-93** **E-18** REV. **5**

02 MAR. 2015

LUMINAIRE SCHEDULE

(MTG) MOUNTING:
- RE - RECESSED
- SP - SUSPENDED
- CL - CEILING SURFACE
- WL - WALL
- UC - UNDER CABINET
- CV - COVE
- PL - POLE
- FR- FLANGED RECESSED
- O - OTHER (SEE DESCRIPTION)

DOOR:
- FA - FLAT ALUMINUM
- FS - FLAT STEEL
- RA - REGRESSED ALUMINUM
- RS - REGRESSED STEEL

FINISH:
- PAF - PAINT AFTER FABRICATION
- CSA - FINISH SELECTION BY ARCHITECT

(Type) LAMP TECHNOLOGY:
- FL - FLUORESCENT
- CF - COMPACT FLUORESCENT
- HL - HALOGEN
- IN - INCANDESCENT
- LED - LIGHT EMITTING DIODE
- HS - HIGH PRESSURE SODIUM
- MH - METAL HALIDE
- SMH - SUPER METAL HALIDE
- PSMH - PULSE START METAL HALIDE
- CMH - CERAMIC METAL HALIDE
- O - OTHER (SEE DESCRIPTION)
- XL - EXTENDED LIFE
- XLP - EXTENDED LIFE & OUTPUT

(L/L) LENS/LOUVER:
- A- .125" ACRYLIC
- B- BLACK BAFFLE
- C- CLEAR ALZAK
- D- PARABOLIC
- F- FRESNEL
- G- TEMPERED GLASS
- H- WALL WASHER
- P- POLY CARBONATE
- K- KSH12 .125" ACRYLIC
- K19- KSH19 .156" ACRYLIC
- L- LOW IRIDESCENT SPECULAR ALUM.
- N- NONE
- R- HIGH IMPACT DR ACRYLIC
- O- OTHER (SEE DESCRIPTION)

(TYPE) BALLAST:
- DIM07- LINE DIMMING BALLAST
- DIM10- 0-10V DIMMING BALLAST
- HL- HIGH / LOW LEVEL BALLAST
- ML- MULTI-LEVEL SWITCHING
- HP- HIGH PERFORMANCE / LBF

(TYPE) BALLAST:
- EB- ELECTRONIC BALLAST
- EM- EMERGENCY BATTERY/BALLAST
- DALI- DIGITAL DIMMING BALLAST
- MV- MULTI-VOLTAGE ELECTRONIC 120V-277V
- #BF- BALLAST FACTOR

CATALOG NUMBER SHALL NOT BE CONSIDERED COMPLETE AND MATERIAL SHALL NOT BE ORDERED BY MANUFACTURER AND CATALOG NUMBER ONLY. THE COMPLETE DESCRIPTION AND THE SPECIFICATION SHALL BE COORDINATED WITH THE CATALOG NUMBER TO DETERMINE THE EXACT MATERIAL AND ACCESSORIES TO BE ORDERED. THE FIRST MANUFACTURER LISTED IS THE BASIS FOR DESIGN.

REFER TO SPECIFICATION SECTIONS LIGHTING 16510 FOR ADDITIONAL INFORMATION AND REQUIREMENTS.

ALL LAMPS FOR THIS PROJECT SHALL BE FURNISHED AND INSTALLED BY THE ELECTRICAL CONTRACTOR UNLESS OTHERWISE NOTED.
LED LAMP COLOR RENDERING INDEX (CRI) AT OR ABOVE 85 FOR INTERIOR APPLICATIONS.

		DIMENSIONS					LAMPS			BALLAST			
ITEM	DESCRIPTION	L	W	H	DIA	MTG	TYPE	QTY	MODEL	VOLTS	TYPE	L/L	APPROVED MANUFACTURER
F1	4' WALL BRACKET & SURFACE MOUNT LED LUMINAIRE. ROLL FORMED FROM CODE-GAUGE STEEL HOUSING. DECORATIVE DIE-CAST END CAPS. WHITE POLYESTER POWDER COAT FINISH. PROVIDE WITH INTEGRAL DUAL TECHNOLOGY (PASSIVE INFARED/ULTRASONIC) OCCUPANCY SENSOR. 30% LUMEN OUTPUT IN UNOCCUPIED MODE.	48"	4-3/4"	3-11/16"		WL/CL	LED	1	MIN. 4000 LUMENS MAX 40 WATT 3500K	120V		O	LITHONIA WL4-40L DAY-BRITE H.E. WILLIAMS COLUMBIA METALUX
F2	LED HIGH BAY LUMINAIRE. STEEL HOUSING WITH END CAP. WIDE DISTRIBUTION. SEMI DIFFUSE ACRYLIC LENS.	45"	15-3/4"	3-1/4"		CL	LED	1	MIN. 18000 LUMENS MAX 192 WATT 3500K	120V		O	LITHONIA IBL-18L-WD-LP835 DAY-BRITE H.E. WILLIAMS COLUMBIA METALUX
F3	4' ENCLOSED AND GASKETED LED LUMINAIRE WITH ACRYLIC CLEAR DEEP LENS.	48"	7-3/8"	4-4/8"		CL	LED	1	MIN. 6000 LUMENS MAX 73 WATT 3500K	120V		O	H.E. WILLIAMS 96-4-L62/835-HIA LITHONIA FEM4LED-6L-35-IMACD DAY-BRITE COLUMBIA METALUX
F4	LED HIGH BAY LUMINAIRE. STEEL HOUSING WITH END CAP. WIDE DISTRIBUTION. SEMI DIFFUSE ACRYLIC LENS.	45"	15-3/4"	3-1/4"		CL	LED	1	MIN. 24000 LUMENS MAX 241 WATT 3500K	120V		O	LITHONIA IBL-24L-WD-LP835 DAY-BRITE H.E. WILLIAMS COLUMBIA METALUX
F5	EXTERIOR LED WALL PACK. PRISMATIC GLASS LENS, FORWARD THROW DISTRIBUTION, ALUMINIUM HOUSING. WET LOCATION LISTED. CUSTOM COLOR SELECTION BY ARCHITECT. REFER TO ARCHITECTURAL ELEVATION FOR EXACT MOUNTING HEIGHT.	16"	10.5"	7"		WL	LED	1	MIN. 3400 LUMENS MAX 54 WATT	120V		O	COOPER McGRAW-EDITION IST PHILIPS GARDCO LITHONIA WST LED ACCULITE DT
F5E	SIMILLAR TO F5. PROVIDE WITH EMERGENCY BATTERY PACK.	16"	10.5"	7"		WL	LED	1	MIN. 3400 LUMENS MAX 54 WATT	120V	EM	O	REFER TO F5
F6	4' WALL BRACKET & SURFACE MOUNT LED LUMINAIRE. ROLL FORMED FROM CODE-GAUGE STEEL HOUSING. DECORATIVE DIE-CAST END CAPS. WHITE POLYESTER POWDER COAT FINISH.	48"	4-3/4"	3-11/16"		WL/CL	LED	1	MIN. 4000 LUMENS MAX 40 WATT 4000K	120V		O	LITHONIA WL4-40L DAY-BRITE H.E. WILLIAMS COLUMBIA METALUX
F7	LED HIGH BAY LUMINAIRE. STEEL HOUSING WITH END CAP. WIDE DISTRIBUTION. SEMI DIFFUSE ACRYLIC LENS.	45"	15-3/4"	3-1/4"		SP	LED	1	MIN. 12000 LUMENS MAX 122 WATT 3500K	120V		O	LITHONIA IBL-12L-WD-LP835 DAY-BRITE H.E. WILLIAMS COLUMBIA METALUX
F8	4' ENCLOSED AND GASKETED LED LUMINAIRE WITH ACRYLIC CLEAR DEEP LENS.	48"	7-3/8"	4-4/8"		WL/CL	LED	1	MIN. 4000 LUMENS MAX 40 WATT 3500K	120V		O	H.E. WILLIAMS 96-4-L40/835-HIA LITHONIA FEM4LED-6L-35-IMACD DAY-BRITE COLUMBIA METALUX
EM1	EMERGENCY UNIT, TWO ADJUSTABLE 6 VOLT HEADS, WHITE THERMOPLASTIC HOUSING. LEAD CALCIUM BATTERY. SELF TEST & DIAGNOSTICS OF INVERTER AND LAMPS.	14"	6"	4"		WL	HL	2	12 WATT HALOGEN	120V	EM	O	LITHONIA ELM6 DUAL-LITE LZ2 McPHILBEN CAX6
EM2	EMERGENCY UNIT, TWO ADJUSTABLE 6 VOLT HEADS, WHITE THERMOPLASTIC HOUSING. LEAD CALCIUM BATTERY. SELF TEST & DIAGNOSTICS OF INVERTER AND LAMPS.	14"	6"	4"		WL	IN	2	INCLUDED	120V	EM	O	LITHONIA ELM6 DUAL-LITE LZ2 McPHILBEN CAX6
EX1	SINGLE-FACE EXIT SIGN, WHITE THERMOPLASTIC BODY, RED LETTERS, EMERGENCY NI-CAD BATTERY INSIDE OF SIGN, UNIVERSAL ARROWS/MOUNTING. SELF TEST & DIAGNOSTICS OF INVERTER AND LAMPS	13"	2"	9"H [11"]		WL/CL	LED	1	3 WATT L.E.D.	120V	EM	O	LITHONIA LQMS 1 EL SD DUAL-LITE LXU [I] McPHILBEN CXXL

REV.	DATE	REVISIONS
5	03/02/15	ISSUED FOR 90% REVIEW
4	02/23/15	ISSUED FOR 90% COST ESTIMATE
3	01/26/15	ISSUED FOR 60% REVIEW
2	01/16/15	ISSUED FOR PRICING
1	12/23/14	SCHEMATIC DESIGN

KJWW ENGINEERING CONSULTANTS
The FUTURE. Built SMARTER.®
1100 WARRENVILLE ROAD, SUITE 400W
NAPERVILLE, ILLINOIS 60563
630.527.2320 FAX: 630.527.2321
www.kjww.com
PROJECT #:
Illinois Design Firm Registration #184-000973

KJWW ENGINEERING RESERVES PROPRIETARY RIGHTS, INCLUDING COPYRIGHTS, TO THIS DRAWING AND THE DATA SHOWN THEREON. SAID DRAWING AND/OR DATA ARE THE EXCLUSIVE PROPERTY OF KJWW ENGINEERING AND SHALL NOT BE USED OR REPRODUCED FOR ANY OTHER PROJECT WITHOUT THE EXPRESS WRITTEN APPROVAL AND PARTICIPATION OF KJWW ENGINEERING. © 2015 KJWW, P.C.

REFERENCE SCALE IN INCHES
0 1 2 3

FERMI LAB		DATE
DESIGNED	T. BALA	3/2/2015
DRAWN	M. WELLS	3/2/2015
CHECKED		
APPROVED		
SUBMITTED		

SCALE:

NOT FOR CONSTRUCTION

FERMI NATIONAL ACCELERATOR LABORATORY

UNITED STATES DEPARTMENT OF ENERGY

SBN FAR DETECTOR BUILDING

ELECTRICAL SCHEDULES

DRAWING NO. **6-7-93** **E-19** REV. 5

02 MAR. 2015

C:\Revit Local Files\MEP15_14.0872.00 - Fermi Lab - Far Detector_CENTRAL_wellsma.rvt

3/2/2015 5:17:55 PM

VARIABLE FREQUENCY DRIVE SCHEDULE

STARTER TYPE:
- PWM - PULSE WIDTH MODULATED
- 12PWM- 12 PULSE PWM
- 18PWM- 18 PULSE PWM

LINE DISCONNECT
- DS - DISCONNECT SWITCH
- FDS - FUSIBLE DISCONNECT SWITCH
- CB - CIRCUIT BREAKER

CONTROL:
- PN - 3-15 PSI PRESSURE TRANSDUCER
- 420 - 4-20mA FOLLOWER INPUT

REMARKS:
- SA - STANDARD ACCESSORIES (INCLUDES * ITEMS)
- *MA - MANUAL SPEED ADJUSTMENT
- *ET - ELECTRONIC THERMAL OVERLOADS
- *CT - CONTROL TRANSFORMER, FUSED, 120V
- *HA - HAND-OFF-AUTO DOOR SWITCH
- TO - MELTING THERMAL OVERLOADS
- MOL - MULTIPLE MOTOR OVERLOADS
- TA - TWO CONVERTIBLE AUXILIARY CONTACTS
- ISO - ISOLATION TRANSFORMER
- *SHZ - SKIP FREQUENCY CAPABILITY
- RSS - REMOTE START-STOP
- RDR - REMOTE DRIVE RUN
- RFT - REMOTE FAULT TRIP
- LR - INPUT LINE REACTOR
- HAR - PASSIVE HARMONIC FILTER

ITEM	LINE DISC.	DRIVE BYPASS	CONTROL	VOLTAGE INPUT	VOLTAGE OUTPUT	VOLTAGE PH.	DRIVE H.P. RATING	DRIVE TYPE	NEMA ENCLOSURE	REMARKS	APPROVED MANUFACTURERS
VFD-EF1 VFD-EF2	CB	3 CONTACT	420	480	480	3	5	PWM	1	SA' 'LR' VARIABLE TORQUE 35,000 SCCR	ABB ACH 550 SERIES DANFOSS VLTFC100 SERIES YASKAWA Z1000
VFD-F1 VFD-F2	CB	3 CONTACT	420	480	480	3	3/4	PWM	1	SA' 'LR' VARIABLE TORQUE 35,000 SCCR	ABB ACH 550 SERIES DANFOSS VLTFC100 SERIES YASKAWA Z1000

TRANSFORMER SCHEDULE

TYPE:
- TP1 - NEMA TP 1 DRY TYPE
- K4 - K4 RATED TP 1 DRY TYPE
- K13 - K13 RATED TP 1 DRY TYPE
- PE - NEMA PREMIUM EFFICIENCY
- HM - HARMONIC MITIGATING TP 1
- AUT - AUTOTRANSFORMER
- BB - BUCK-BOOST
- LIQ - LIQUID FILLED

REMARKS:
- AL - ALUMINUM WINDINGS
- CP - COPPER WINDINGS
- RS - EPOXY RESIN ENCAPSULATED
- FL - FILTERED
- NV - NON-VENTILATED
- NL - 200% RATED NEUTRAL
- EL - ELECTROSTATIC SHIELD

ENCLOSURE: NEMA 1 UNLESS SPECIFIED OTHERWISE

ITEM	KVA RATING	TYPE	MAX. TEMP. RISE C.	PRIMARY VOLTS	PRIMARY PH	SECONDARY VOLTS	SECONDARY PH	TAPS % REG	TAPS #(+)	TAPS #(-)	REMARKS	APPROVED MANUFACTURERS
TR-SFDBA1-A TR-SFDBA1-C	75	K13	150	480	3	208Y/120	3	2.5	2	4	CP, NL, EL	BASE BID: SQUARE D 7400 EP75T3HISCUNLP ALTERNATE BID: SIEMENS, EATON
TR-SFDBB1-A TR-SFDBB1-B	112.5	K13	115	480	3	208Y/120	3	2.5	2	4	CP, NL, EL, DOUBLE SHIELDED	CONTROLLED POWER COMPANY: DLX-112KG-13
ETR-EDPH-SFDBA1-A TR-SFDBA1-B	75	TP1	150	480	3	208Y/120	3	2.5	2	4	CP	BASE BID: SQUARE D 7400 EE75T3H ALTERNATE BID: SIEMENS, EATON

TRANSFER SWITCH SCHEDULE

SWITCH TYPE:
- AUTO - AUTOMATIC
- B/I - AUTOMATIC WITH BYPASS ISOLATION
- MAN - MANUAL OPERATION
- CT - CLOSED TRANSITION
- DT - DELAY TRANSITION - CENTER OFF
- STAT - STATIC SOLID STATE
- /30 - 30 CYCLE WITHSTAND RATING
- SN - SWITCHED NEUTRAL
- ON - OVERLAPPING SWITCHED NEUTRAL
- DN - SOLID NEUTRAL

ACCESSORIES: (ACC)
- EE - ENGINE EXERCISER
- IM - INPHASE MONITOR
- SH - STRIP HEATER WITH THERMOSTAT
- RM - REMOTE ANNUNCIATOR
- RC - REMOTE CONTROL CIRCUITS
- EL - ELEVATOR EMERGENCY TO NORMAL PRESIGNAL
- SP - SERIAL COMMUNICATIONS PORT
- PM - POWER MONITORING METER
- RTC - REMOTE TRANSFER CONTROL FROM FIRE COMMAND CENTER
- RMC - REMOTE ANNUNCIATION AT FIRE COMMAND CENTER
- TI - TRANSFER INHIBIT
- LS - LOAD SHED

ITEM	SWITCH TYPE	SWITCH VOLTAGE	SWITCH POLES	SWITCH AMPS	NEMA ENCLOSURE	ACC	REMARKS	APPROVED MANUFACTURERS
ATS-EPHP-SFDBA1-1	B/I	480	4	200	1	EE, ON, PROVIDE WITH EXTERNAL MANUAL OPERATION	GENERATOR START DELAY 10 SECONDS	RUSS ELECTRIC RTS SERIES

DISCONNECT AND STARTER SCHEDULE

STARTER TYPE:
- FV - FULL VOLTAGE
- YD - WYE - DELTA
- RE - REVERSING
- TW - 2 SPEED, 2 WINDING
- SW - 2 SPEED, 1 WINDING
- RV - REDUCED VOLTAGE AUTOXFMR
- SS - SOLID STATE
- MD - MOTOR DISCONNECT SWITCH
- MS - MANUAL STARTER
- MX - MANUAL SWITCH
- FDS - FUSED SWITCH

REMARKS:
- SA - STANDARD ACCESSORIES (INCLUDES * ITEMS)
- *CT - CONTROL TRANSFORMER, FUSED 120V
- *EO - ELECTRONIC OVERLOAD
- *HA - HAND-OFF-AUTO IN DOOR
- *RP - RED (RUN) PILOT LIGHT IN DOOR
- *TA - TWO CONVERTIBLE AUXILIARY CONTACTS
- S/N - INSULATED NEUTRAL ASSEMBLY
- PF - PHASE FAILURE RELAY (5 HP OR GREATER)
- TO - MELTING THERMAL OVERLOADS
- TS - 2 SPEED SELECTOR SWITCH IN DOOR
- GP - GREEN (OFF) PILOT LIGHT IN DOOR
- FA - 4-CONVERTIBLE AUXILIARY CONTACTS
- EI - ELECTRICAL INTERLOCK (2)-N.O.& (2)-N.C
- SS - START-STOP PUSHBUTTON IN DOOR
- HL - HANDLE PADLOCK HASP

ITEM	DISCONNECT TYPE & RATING FUSED	NON-FUSED	CIRCUIT BREAKER	VOLTAGE	POLES	STARTER NEMA SIZE	STARTER TYPE	NEMA ENCLOSURE	REMARKS	APPROVED MANUFACTURERS
FDS-TR-SFDBB1-A FDS-TR-SFDBB1-B	200A			600	3			1	FUSED AT 3-175 AMPS VIEWING WINDOW	BASE BID: SQUARE D 3110
FDS-PP-SFDBB1-A1 FDS-PP-SFDBB1-B1	400			240	3			1	FUSED AT 3-400 AMPS, 200% S/N, VIEWING WINDOW	BASE BID: SQUARE D 3110 ALTERNATE BID: SIEMENS, EATON
MX-1		30A		120	1		MX	1		BASE BID: SQUARE D 2510 KG1 ALTERNATE BID: SIEMENS, EATON
MX-2		30A		208	2		MX	1	RP	BASE BID: SQUARE D 2510 KG1B ALTERNATE BID: SIEMENS, EATON
DS-UH1 DS-UH2 DS-CRANE1 DS-CRANE2		100A		600	3			1	VIEWING WINDOW	BASE BID: SQUARE D 3110 ALTERNATE BID: SIEMENS, EATON
FDS-PP-SFDBA1-B1 FDS-EPP-SFDBA1-A1	400			240	3			1	FUSED AT 3-250 AMPS, S/N, VIEWING WINDOW	BASE BID: SQUARE D 3110 ALTERNATE BID: SIEMENS, EATON
FDS-TR-SFDBA1-C	200A			600	3			1	FUSED AT 3-125 AMPS VIEWING WINDOW	BASE BID: SQUARE D 3110 ALTERNATE BID: SIEMENS, EATON
FDS-PP-SFDBA1-A1 FDS-PP-SFDBA1-C1	400			240	3			1	FUSED AT 3-250 AMPS, 200% S/N, VIEWING WINDOW	BASE BID: SQUARE D 3110 ALTERNATE BID: SIEMENS, EATON
FDS-CRANE1 FDS-CRANE2	100A			600	3			1	VIEWING WINDOW, COORDINATE FUSE SIZE WITH CRANE MANUFACTURER	BASE BID: SQUARE D 3110 ALTERNATE BID: SIEMENS, EATON
FDS-GEN-SFDBA1	400A			600	3			1	FUSED AT 3-200 AMPS, S/N VIEWING WINDOW	BASE BID: SQUARE D 3110 ALTERNATE BID: SIEMENS, EATON
MTS-SFDBA1-CRANE		400A		600	3			1	VIEWING WINDOW, DOUBLE THROW THREE POLE SWITCH,S/N	BASE BID: SQUARE D 3140 ALTERNATE BID: SIEMENS, EATON

C:\Revit Local Files\MEP15_14.0872.00 - Fermi Lab - Far Detector_CENTRAL_wellsma.rvt

3/2/2015 5:17:55 PM

REV.	DATE	REVISIONS
5	03/02/15	ISSUED FOR 90% REVIEW
4	02/23/15	ISSUED FOR 90% COST ESTIMATE
3	01/26/15	ISSUED FOR 60% REVIEW
2	01/16/15	ISSUED FOR PRICING
1	12/23/14	SCHEMATIC DESIGN

KJWW ENGINEERING CONSULTANTS
The FUTURE. Built SMARTER.®
1100 WARRENVILLE ROAD, SUITE 400W
NAPERVILLE, ILLINOIS 60563
630.527.2320 FAX: 630.527.2321
www.kjww.com
PROJECT #:
Illinois Design Firm Registration #184-000973

KJWW ENGINEERING RESERVES PROPRIETARY RIGHTS, INCLUDING COPYRIGHTS, TO THIS DRAWING AND THE DATA SHOWN THEREON. SAID DRAWING AND/OR DATA ARE THE EXCLUSIVE PROPERTY OF KJWW ENGINEERING AND SHALL NOT BE USED OR REPRODUCED FOR ANY OTHER PROJECT WITHOUT THE EXPRESS WRITTEN APPROVAL AND PARTICIPATION OF KJWW ENGINEERING. © 2015 KJWW, P.C.

REFERENCE SCALE IN INCHES: 0 1 2 3

FERMI LAB		DATE
DESIGNED	T. BALA	3/2/2015
DRAWN	M. WELLS	3/2/2015
CHECKED		
APPROVED		
SUBMITTED		

SCALE:

NOT FOR CONSTRUCTION

FERMI NATIONAL ACCELERATOR LABORATORY

UNITED STATES DEPARTMENT OF ENERGY

SBN FAR DETECTOR BUILDING

ELECTRICAL SCHEDULES

DRAWING NO. **6-7-93** **E-20** REV. 5

02 MAR. 2015

GENERAL ELECTRICAL EQUIPMENT SCHEDULE

THE SYMBOLS AND THE EQUIPMENT SCHEDULE ARE FOR THE CONVENIENCE OF THE SUB-CONTRACTOR. EACH SUB-CONTRACTOR SHALL BE RESPONSIBLE FOR VERIFICATION OF QUANTITIES AND SHALL FURNISH ALL MATERIAL REQUIRED, WHETHER SPECIFIED OR NOT, TO PRODUCE A SATISFACTORY WORKING SYSTEM.

CATALOG NUMBERS SHALL NOT BE CONSIDERED COMPLETE BUT ARE GIVEN ONLY TO AID THE SUB-CONTRACTOR IN THE SEARCH FOR MATERIAL. NO MATERIAL SHALL BE ORDERED BY MANUFACTURER AND CATALOG NUMBER ONLY. EACH SUB-CONTRACTOR SHALL FIRST READ THE COMPLETE DESCRIPTION OF THE MATERIAL ON THESE DRAWINGS AND SPECIFICATIONS. THE FIRST MANUFACTURER LISTED IS THE BASIS OF DESIGN. "STANDARD COLOR" INDICATES FACTORY FINISH AVAILABLE AT NO ADDITIONAL CHARGE.

ITEM NO.	SYMBOL	DESCRIPTION	APPROVED MANUFACTURERS
1	DEVICE COLOR	ALL SWITCH, RECEPTACLE, OUTLET, AND COVERPLATE COLORS SHALL BE [IVORY] [GRAY] [WHITE] [ALMOND] [LIGHT ALMOND / OFFICE WHITE] VERIFIED WITH ARCHITECT], UNLESS INDICATED OTHERWISE.	HUBBELL LEVITON PASS & SEYMOUR COOPER
2	COVER PLATES	ALL SWITCHES, RECEPTACLES, AND OUTLETS SHALL BE COMPLETE WITH [UNBREAKABLE THERMOPLASTIC/THERMOSET PLASTIC/#302 STAINLESS STEEL/BRASS] COVERPLATES IN FINISHED SPACES WHERE WALLS ARE FINISHED; #302 STAINLESS STEEL COVERPLATES IN UNFINISHED SPACES FOR FLUSH BOXES; AND GALVANIZED STEEL COVERPLATES IN UNFINISHED SPACES FOR SURFACE MOUNTED BOXES. WHERE SEVERAL DEVICES ARE GANGED TOGETHER, THE COVER PLATE SHALL BE OF THE GANGED STYLE FOR THE NUMBER OF DEVICES USED. [INSTALL NAMEPLATE IDENTIFICATION WHERE INDICATED]	HUBBELL LEVITON PASS & SEYMOUR COOPER
3	LCP-SFDB	LIGHTING CONTROL PANEL. 20A/1P, 16 RELAYS, 120V, SURFACE MOUNTED. NEMA 1 ENCLOSURE, BUILT IN ASTRONOMIC TIME CLOCK. REFER TO RELAY CONTROL PANEL CONTROL DIAGRAM DETAIL ON SHEET E12 FOR ADDITIONAL INFORMATION. COORDINATE WITH MANUFACTURER FOR EXACT WIRING REQUIREMENTS.	LIGHTING CONTROLS GR2400
4	LCS-#	LIGHTING CONTROL STATION. REFER TO RELAY CONTROL PANEL CONTROL DIAGRAM DETAIL ON SHEET E12 FOR CONFIGURATION. INSTALL WIRING IN CONDUIT.	COMPATIBLE WITH LIGHTING CONTROL PANEL.
5	S_O	OCCUPANCY SENSOR WALL SWITCH, PASSIVE INFRARED, ZERO CROSSING CIRCUITRY, , ADJUSTABLE SENSITIVITY AND TIME DELAY, NO MINIMUM LOAD REQUIREMENTS, MANUAL OR AUTO ON OPERATION, INITIAL SETTINGS: 10 MINUTES, AMBIENT SENSOR 40 FC.	WATT STOPPER PW-100 SERIES SENSOR SWITCH WSD HUBBELL INC. LHIRS1 OR AP1277 LEVITON ODS15 GREENGATE OSW-P-0451
6		RECEPTACLE, DUPLEX, 125 VOLT, 20 AMP,3 WIRE GROUNDING TYPE, N.E.M.A. 5-20R, IMPACT RESISTANT THERMOPLASTIC FACE, STEEL BACK STRAP. DOUBLE DUPLEX, CONSIST OF TWO DUPLEX RECEPTACLES, DOUBLE GANG BOX, PLASTER RING AND FACEPLATE.	HUBBELL 5352A LEVITON 5362-S PASS & SEYMOUR 5362 COOPER 5352
7		RECEPTACLE, GROUND FAULT DUPLEX, 125 VOLT, 20 AMP, 3 WIRE GROUNDING TYPE, N.E.M.A. 5-20R. TEST AND RESET BUTTONS IN IMPACT RESISTANT THERMOPLASTIC FACE. DOUBLE DUPLEX, CONSIST OF TWO DUPLEX RECEPTACLES, DOUBLE GANG BOX, PLASTER RING AND FACEPLATE.	HUBBELL GF20L LEVITON 7899 PASS & SEYMOUR 2095 COOPER VGF20
8	W	RECEPTACLE, GROUND FAULT DUPLEX, WEATHER RESISTANT, WEATHERPROOF COVERPLATE, 125 VOLT, 20 AMP, 3 WIRE GROUNDING TYPE, N.E.M.A. 5-20R. TEST AND RESET BUTTONS IN IMPACT RESISTANT THERMOPLASTIC FACE, NEMA 3R RATED WHILE IN USE, (CLEAR) [CAST ALUMINUM], NON-LOCKING, STANDARD DEPTH, VERTICAL MOUNT.	HUBBELL GFTR20(/RW57300) [WP826] LEVITON W7899-TR/(5977-CL) [M5979] PASS & SEYMOUR 2095TRWR/(WIUC10-C) [WIUCAST1] COOPER TWRVGF20/ (WIU-1) [WIUMV-1]
9	J J	JUNCTION BOX, SIZE PER N.E.C., REFER TO SPECIFICATIONS FOR GENERAL CONSTRUCTION, USE OF THIS SYMBOL DOES NOT INDICATE ALL JUNCTION BOXES REQUIRED FOR THIS CONTRACT ARE SHOWN.	REFER TO SPECIFICATIONS
10	E E	ELECTRICAL CONNECTION TO EQUIPMENT AND MOTORS, SIZE PER N.E.C. COORDINATE REQUIREMENTS WITH CONTRACTOR FURNISHING EQUIPMENT OR MOTOR. REFER TO SPECIFICATIONS AND GENERAL INSTALLATION NOTES FOR TERMINATIONS TO MOTORS.	REFER TO SPECIFICATIONS
11		PANELBOARD, SURFACE MOUNT, 208/120 VOLT, 3 PHASE, 4 WIRE, 200% S/N, GROUND BUS, COPPER BUS, BOLT-ON BREAKERS, NEMA 1 ENCLOSURE, REFER TO SCHEDULES FOR SIZE AND CONFIGURATION, REFER TO SPECIFICATIONS FOR ADDITIONAL INFORMATION. PP-SFDBA1-A1 PP-SFDBB1-A1 PP-SFDBA1-C1 PP-SFDBB1-B1	BASE BID: SQUARE D NQ ALTERNATE BID: SIEMENS, EATON
12	PHP-SFDBA1-1	PANELBOARD, SURFACE MOUNT, 480/277 VOLT, 3 PHASE, 4 WIRE, S/N, GROUND BUS, COPPER BUS, BOLT-ON BREAKERS, NEMA 1 ENCLOSURE, REFER TO SCHEDULES FOR SIZE AND CONFIGURATION, REFER TO SPECIFICATIONS FOR ADDITIONAL INFORMATION.	BASE BID: SQUARE D NF ALTERNATE BID: SIEMENS, EATON
13	DHP-SFDBA1 DHP-SFDBB1	DISTRIBUTION PANEL, CIRCUIT BREAKER 480/277 VOLT, 3 PHASE, S/N, GROUND BUS, SURFACE MOUNTED NEMA 1 ENCLOSURE, SUITABLE FOR USE AS SERVICE ENTRANCE EQUIPMENT, REFER TO ONE LINE DIAGRAM AND SPECIFICATIONS.	BASE BID: SQUARE D I-LINE ALTERNATE BID: SIEMENS, EATON
14	SPD-DHP-SFDBA1 SPD-DHP-SFDBB1	SURGE PROTECTION DEVICE, NON-MODULAR SERVICE ENTRANCE TYPE, CATEGORY C3 RATING, EXTERNAL MOUNTED CABINET AND 480/277 VOLT, 3 PHASE, 4 WIRE, REFER TO SPECIFICATION SECTION 16 412 FOR ADDITIONAL INFORMATION.	CURRENT TECH. CURRENT GUARD PLUS LIEBERT ACVII SERIES LEA INTERNATIONAL LSS SERIES
15	SPD-EDHP-SFDBA1	SURGE PROTECTION DEVICE, NON-MODULAR SECONDARY DISTRIBTION TYPE, CATEGORY B3/C1 RATING, EXTERNAL MOUNTED CABINET, 480/277 VOLT, 3 PHASE, 4 WIRE, REFER TO SPECIFICATION SECTION 16 412 FOR ADDITIONAL INFORMATION.	CURRENT TECH. CURRENT GAURD PLUS LIEBERT ACV SERIES LEA INTERNATIONAL SP SERIES
16	⊥	GROUND BUS, COPPER, REFER TO SPECIFICATION AND DETAIL 3/E-14 FOR ADDITIONAL INFORMATION.	.

GENERAL ELECTRICAL EQUIPMENT SCHEDULE

THE SYMBOLS AND THE EQUIPMENT SCHEDULE ARE FOR THE CONVENIENCE OF THE SUB-CONTRACTOR. EACH SUB-CONTRACTOR SHALL BE RESPONSIBLE FOR VERIFICATION OF QUANTITIES AND SHALL FURNISH ALL MATERIAL REQUIRED, WHETHER SPECIFIED OR NOT, TO PRODUCE A SATISFACTORY WORKING SYSTEM.

CATALOG NUMBERS SHALL NOT BE CONSIDERED COMPLETE BUT ARE GIVEN ONLY TO AID THE SUB-CONTRACTOR IN THE SEARCH FOR MATERIAL. NO MATERIAL SHALL BE ORDERED BY MANUFACTURER AND CATALOG NUMBER ONLY. EACH SUB-CONTRACTOR SHALL FIRST READ THE COMPLETE DESCRIPTION OF THE MATERIAL ON THESE DRAWINGS AND SPECIFICATIONS. THE FIRST MANUFACTURER LISTED IS THE BASIS OF DESIGN. "STANDARD COLOR" INDICATES FACTORY FINISH AVAILABLE AT NO ADDITIONAL CHARGE.

ITEM NO.	SYMBOL	DESCRIPTION	APPROVED MANUFACTURERS
17	DPM	DIGITAL POWER METER, MOUNTED IN FACE OF EQUIPMENT/DISTRIBUTION PANEL, DIGITAL READOUT OF VOLTS, AMPS, KW, KWH. DEMAND KW, THD NETWORK COMMUNICATIONS CAPABLE.	SQUARE D POWER LOGIC PM850
18		PANELBOARD, SURFACE MOUNT, 208/120 VOLT, 3 PHASE, 4 WIRE, S/N, GROUND BUS, COPPER BUS, BOLT-ON BREAKERS, NEMA 1 ENCLOSURE, REFER TO SCHEDULES FOR SIZE AND CONFIGURATION, REFER TO SPECIFICATIONS FOR ADDITIONAL INFORMATION. PP-SFDBA1-B1 EPP-UPS-SFDBA1-A1-1 EPP-SFDBA1-A1	BASE BID: SQUARE D NQ ALTERNATE BID: SIEMENS, EATON
19		DISTRIBUTION PANEL, CIRCUIT BREAKER 480/277 VOLT, 3 PHASE, S/N, GROUND BUS, SURFACE MOUNTED NEMA 1 ENCLOSURE, REFER TO ONE LINE DIAGRAM AND SPECIFICATIONS. DHP-SFDBA1-CRANE EDHP-SFDBA1-1	BASE BID: SQUARE D I-LINE ALTERNATE BID: SIEMENS, EATON
20	UPS-EPP-SFDBA1-A1	UNINTERRUPTIBLE POWER SUPPLY , TWO (2) 10 KVA / 9 KW MODULES (ONE MODULE FOR REDUNDANCY, EXPANDABLE TO (3) MODULES), 208/120 VOLT, 3 PHASE, 4 WIRE + GND INPUT AND OUTPUT, TRUE ON LINE, DOUBLE CONVERSION, IGBT INVERTER, LINE AND MATCH DESIGN, AUTOMATIC CONTINUOUS BYPASS SWITCH, INPUT HARMONIC FILTER AT OUTPUT FULL LOAD, PROGRAMMABLE RELAY BOARD SNMP INTERFACE, BATTERY CABINET, 10 MINUTES AT 10 KVA, EXPANDABLE TO 10 MIN AT 20 KVA LOAD.	MITSHUBISHI 1100A
21	UPS-BYPASS	WALL MOUNTED EXTERNAL MAINTENANCE CABINET, REFER TO ONE LINE AND SPECIFICATIONS FOR ADDITIONAL INFORMATION.	MITSHUBISHI
22	SC-GND-1	WALL-MOUNT GROUND BAR, 4" H X 12" L X 1/4" D COPPER, ELECTRICALLY ISOLATED BY INSULATORS INTEGRAL TO MOUNTING BRACKETS, PROVIDE UNIT CONFIGURED WITH SIXTEEN (16) SETS OF 5/16" HOLES SPACED 5/8" ON CENTER TO ACCOMMODATE "A" SPACED TWO-HOLE COMPRESSION LUGS AND THREE (3) SETS OF 7/16" HOLES SPACED 1" ON CENTER TO ACCOMMODATE "C" SPACED TWO-HOLE COMPRESSION LUGS. ANSI/EIA/TIA-607 AND BICSI COMPLIANT. UL LISTED.	CHATSWORTH PRODUCTS 40153-012 PANDUIT
23	SC-LR-1	LADDER RACK, 12" WIDTH TUBULAR FIBER GLASS CONSTRUCTION WITH FULL LINE OF SECTIONS, FITTINGS, COVERS AND MOUNTING ACCESSORIES IN POLYSTER AND VINYLESTER FIBERGLASS.	LEGRAND 7400 SERIES CHATSWORTH B-LINE
24	SC-TTB	TELECOMMUNICATIONS TERMINAL BOARD, 4' X 8' X 3/4" A-C GRADE FIRE-RATED PLYWOOD. EXPOSED SIDE SHALL BE SMOOTH. MOUNT VERTICALLY WITH TOP OF PLYWOOD AT 8'6" A.F.F.	*

C:\Revit Local Files\MEP15_14.0872.00 - Fermi Lab - Far Detector_CENTRAL_wellsma.rvt

3/2/2015 5:17:55 PM

REV.	DATE	
5	03/02/15	ISSUED FOR 90% REVIEW
4	02/23/15	ISSUED FOR 90% COST ESTIMATE
3	01/26/15	ISSUED FOR 60% REVIEW
2	01/16/15	ISSUED FOR PRICING
1	12/23/14	SCHEMATIC DESIGN

REVISIONS

KJWW ENGINEERING CONSULTANTS
The FUTURE. Built SMARTER.®
1100 WARRENVILLE ROAD, SUITE 400W
NAPERVILLE, ILLINOIS 60563
630.527.2320 FAX: 630.527.2321
www.kjww.com
PROJECT #:
Illinois Design Firm Registration #184-000973

KJWW ENGINEERING RESERVES PROPRIETARY RIGHTS, INCLUDING COPYRIGHTS, TO THIS DRAWING AND THE DATA SHOWN THEREON. SAID DRAWING AND/OR DATA ARE THE EXCLUSIVE PROPERTY OF KJWW ENGINEERING AND SHALL NOT BE USED OR REPRODUCED FOR ANY OTHER PROJECT WITHOUT THE EXPRESS WRITTEN APPROVAL AND PARTICIPATION OF KJWW ENGINEERING. © 2015 KJWW, P.C.

REFERENCE SCALE IN INCHES
0 1 2 3

FERMI LAB		DATE
DESIGNED	T. BALA	3/2/2015
DRAWN	M. WELLS	3/2/2015
CHECKED		
APPROVED		
SUBMITTED		

SCALE:

NOT FOR CONSTRUCTION

FERMI NATIONAL ACCELERATOR LABORATORY

UNITED STATES DEPARTMENT OF ENERGY

SBN FAR DETECTOR BUILDING

ELECTRICAL SCHEDULES

DRAWING NO. 6-7-93 E-21 REV. 5

02 MAR. 2015

GENERAL SHEET NOTES

1. REFER TO SHEET E-1 FOR GENERAL ELECTRICAL NOTES AND ELECTRICAL INSTALLATION NOTES.
2. REFER TO SHEET E-16 THROUGH E-18 FOR PANEL SCHEDULES.
3. REFER TO SHEET FA-4 FOR FIRE ALARM MATRIX, FIRE ALARM RISER DIAGRAM AND FIRE ALARM MATERIAL LIST.

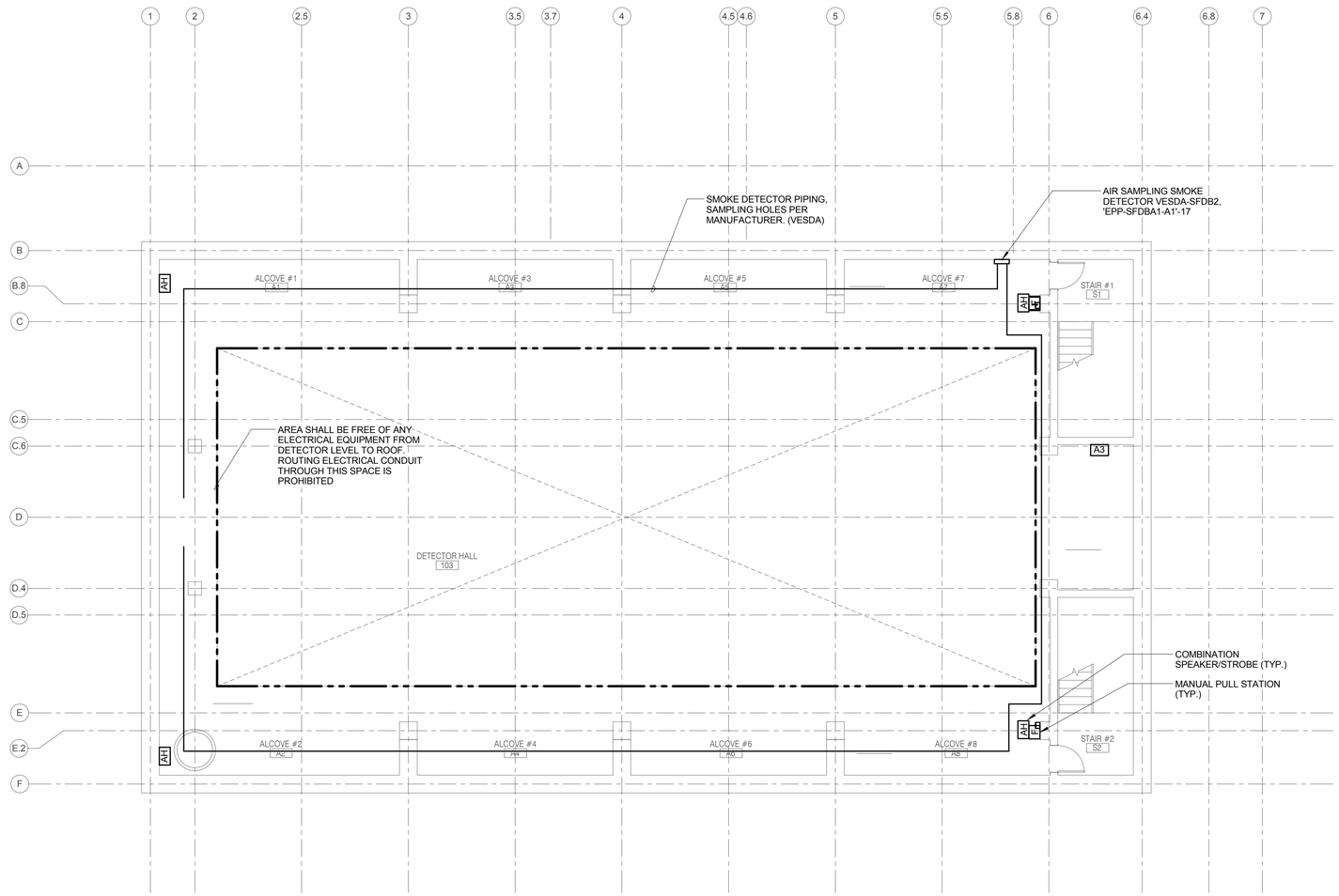

ENCLOSURE LEVEL FIRE ALARM PLAN

C:\Revit Local Files\MEP15_14.0872.00 - Fermi Lab - Far Detector_CENTRAL_wellsma.rvt

3/2/2015 5:17:56 PM

REV.	DATE	REVISIONS
5	03/02/15	ISSUED FOR 90% REVIEW
4	02/23/15	ISSUED FOR 90% COST ESTIMATE
3	01/26/15	ISSUED FOR 60% REVIEW
2	01/16/15	ISSUED FOR PRICING
1	12/23/14	SCHEMATIC DESIGN

KJWW ENGINEERING CONSULTANTS
The FUTURE. Built SMARTER.®
1100 WARRENVILLE ROAD, SUITE 400W
NAPERVILLE, ILLINOIS 60563
630.527.2320 FAX: 630.527.2321
www.kjww.com
PROJECT #:
Illinois Design Firm Registration #184-000973

KJWW ENGINEERING RESERVES PROPRIETARY RIGHTS, INCLUDING COPYRIGHTS, TO THIS DRAWING AND THE DATA SHOWN THEREON. SAID DRAWING AND/OR DATA ARE THE EXCLUSIVE PROPERTY OF KJWW ENGINEERING AND SHALL NOT BE USED OR REPRODUCED FOR ANY OTHER PROJECT WITHOUT THE EXPRESS WRITTEN APPROVAL AND PARTICIPATION OF KJWW ENGINEERING. © 2015 KJWW, P.C.

REFERENCE SCALE IN INCHES: 0 1 2 3

FERMI LAB		DATE
DESIGNED	T. BALA	3/2/2015
DRAWN	M. WELLS	3/2/2015
CHECKED		
APPROVED		
SUBMITTED		

S W E PROJECT NORTH

SCALE: 1/8"=1'-0" — 8 0 8 16 SCALE FEET

NOT FOR CONSTRUCTION

FERMI NATIONAL ACCELERATOR LABORATORY

UNITED STATES DEPARTMENT OF ENERGY

SBN FAR DETECTOR BUILDING

ENCLOSURE LEVEL FIRE ALARM PLAN

DRAWING NO. **6-7-93** **FA-1** REV. 5

02 MAR. 2015

GENERAL SHEET NOTES

1. REFER TO SHEET E-1 FOR GENERAL ELECTRICAL NOTES AND ELECTRICAL INSTALLATION NOTES.
2. REFER TO SHEET E-16 THROUGH E-18 FOR PANEL SCHEDULES.
3. REFER TO SHEET FA-4 FOR FIRE ALARM MATRIX, FIRE ALARM RISER DIAGRAM AND FIRE ALARM MATERIAL LIST.

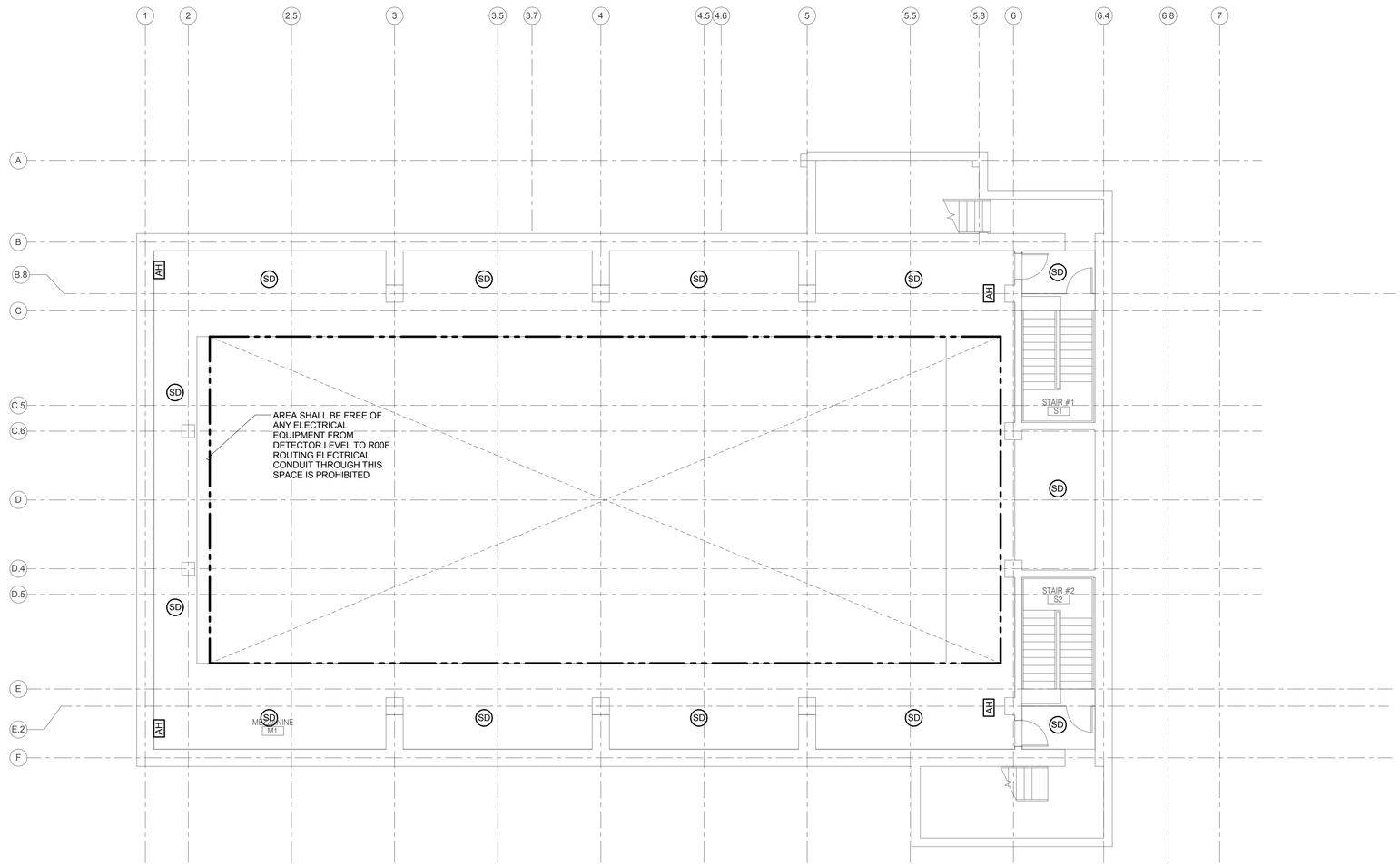

MEZZANINE LEVEL FIRE ALARM PLAN

C:\Revit Local Files\MEP15_14.0872.00 - Fermi Lab - Far Detector_CENTRAL_wellsma.rvt

3/2/2015 5:17:56 PM

REV.	DATE	REVISIONS
5	03/02/15	ISSUED FOR 90% REVIEW
4	02/23/15	ISSUED FOR 90% COST ESTIMATE
3	01/26/15	ISSUED FOR 60% REVIEW
2	01/16/15	ISSUED FOR PRICING
1	12/23/14	SCHEMATIC DESIGN

KJWW ENGINEERING CONSULTANTS
The FUTURE. Built SMARTER.®
1100 WARRENVILLE ROAD, SUITE 400W
NAPERVILLE, ILLINOIS 60563
630.527.2320 FAX: 630.527.2321
www.kjww.com
PROJECT #:
Illinois Design Firm Registration #184-000973

KJWW ENGINEERING RESERVES PROPRIETARY RIGHTS, INCLUDING COPYRIGHTS, TO THIS DRAWING AND THE DATA SHOWN THEREON. SAID DRAWING AND/OR DATA ARE THE EXCLUSIVE PROPERTY OF KJWW ENGINEERING AND SHALL NOT BE USED OR REPRODUCED FOR ANY OTHER PROJECT WITHOUT THE EXPRESS WRITTEN APPROVAL AND PARTICIPATION OF KJWW ENGINEERING. © 2015 KJWW, P.C.

REFERENCE SCALE IN INCHES
0 1 2 3

FERMI LAB		DATE
DESIGNED	T. BALA	3/2/2015
DRAWN	M. WELLS	3/2/2015
CHECKED		
APPROVED		
SUBMITTED		

S W E PROJECT NORTH

SCALE:
1/8"=1'-0"
8 0 8 16
SCALE FEET

NOT FOR CONSTRUCTION

FERMI NATIONAL ACCELERATOR LABORATORY
UNITED STATES DEPARTMENT OF ENERGY

SBN FAR DETECTOR BUILDING
MEZZANINE LEVEL FIRE ALARM PLAN

DRAWING NO. **6-7-93** **FA-2** REV. **5**

02 MAR. 2015

GENERAL SHEET NOTES

1. REFER TO SHEET E1 FOR GENERAL ELECTRICAL NOTES AND ELECTRICAL INSTALLATION NOTES.
2. REFER TO SHEET E16 THROUGH E18 FOR PANEL SCHEDULES.
3. REFER TO SHEET FA4 FOR FIRE ALARM MATRIX, FIRE ALARM RISER DIAGRAM AND FIRE ALARM MATERIAL LIST.

KEYNOTES (#)

1. REMOVABLE WALL. DO NOT ROUTE CONDUITS THROUGH THIS SPACE.

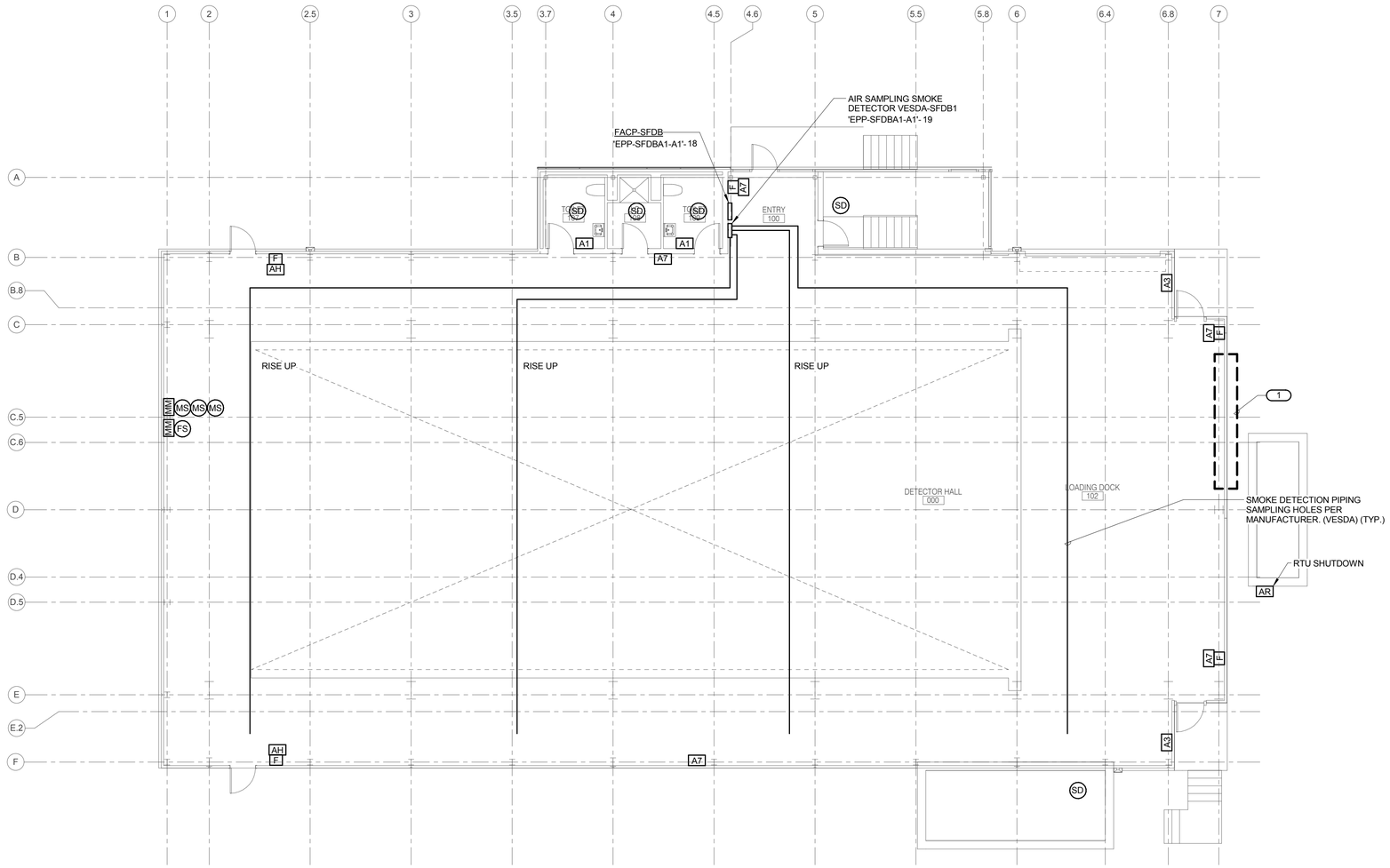

GRADE LEVEL FIRE ALARM PLAN

REV.	DATE	
5	03/02/15	ISSUED FOR 90% REVIEW
4	02/23/15	ISSUED FOR 90% COST ESTIMATE
3	01/26/15	ISSUED FOR 60% REVIEW
2	01/16/15	ISSUED FOR PRICING
1	12/23/14	SCHEMATIC DESIGN

REVISIONS

KJWW ENGINEERING CONSULTANTS
The FUTURE. Built SMARTER.®
1100 WARRENVILLE ROAD, SUITE 400W
NAPERVILLE, ILLINOIS 60563
630.527.2320 FAX: 630.527.2321
www.kjww.com
PROJECT #:
Illinois Design Firm Registration #184-000973

KJWW ENGINEERING RESERVES PROPRIETARY RIGHTS, INCLUDING COPYRIGHTS, TO THIS DRAWING AND THE DATA SHOWN THEREON. SAID DRAWING AND/OR DATA ARE THE EXCLUSIVE PROPERTY OF KJWW ENGINEERING AND SHALL NOT BE USED OR REPRODUCED FOR ANY OTHER PROJECT WITHOUT THE EXPRESS WRITTEN APPROVAL AND PARTICIPATION OF KJWW ENGINEERING. © 2015 KJWW, P.C.

REFERENCE SCALE IN INCHES 0 1 2 3

	FERMI LAB	DATE
DESIGNED	T. BALA	3/2/2015
DRAWN	M. WELLS	3/2/2015
CHECKED		
APPROVED		
SUBMITTED		

S W E PROJECT NORTH

SCALE:
1/8"=1'-0" 8 0 8 16 SCALE FEET

NOT FOR CONSTRUCTION

FERMI NATIONAL ACCELERATOR LABORATORY
UNITED STATES DEPARTMENT OF ENERGY

SBN FAR DETECTOR BUILDING
GRADE LEVEL FIRE ALARM PLAN

DRAWING NO. **6-7-93** **FA-3** REV. 5

02 MAR. 2015

C:\Revit Local Files\MEP15_14.0872.00 - Fermi Lab - Far Detector_CENTRAL_wellsma.rvt

3/2/2015 5:17:57 PM

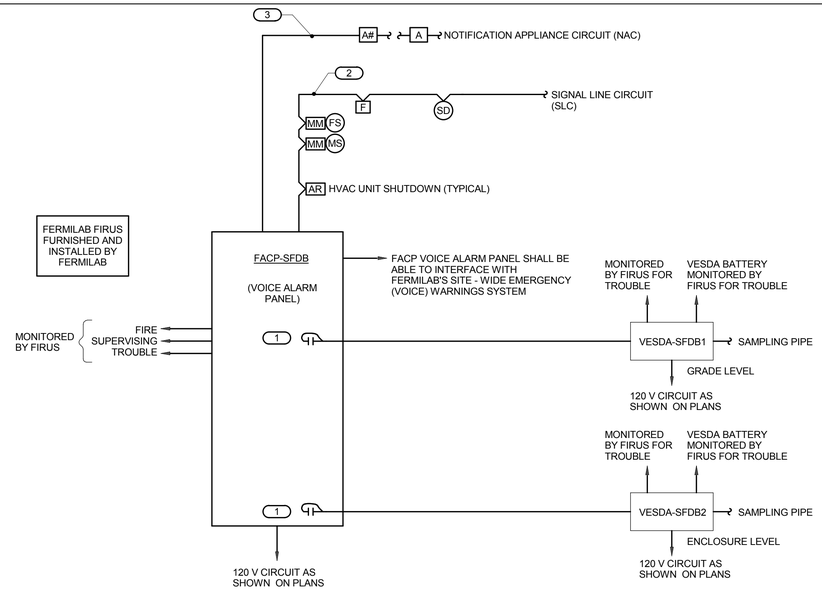

KEYNOTES:

1. REPRESENTATIVE OF PROGRAMMABLE I/O POINTS IN THE PANEL OR A GENERAL SYSTEM TROUBLE/ALARM CONTACT CONNECTED TO THE SYSTEM NOTED. REFER TO SPECIFICATIONS FOR MORE INFORMATION.
2. REFER TO SPECIFICATION FOR REQUIREMENTS OF EACH INITIATION LOOP AND WIRING STYLE. REFER TO FLOOR PLANS FOR DEVICES AND THEIR LOCATIONS.
3. REFER TO SPECIFICATION FOR REQUIREMENTS OF EACH NOTIFICATION APPLIANCE CIRCUIT AND WIRING STYLE. REFER TO FLOOR PLANS FOR DEVICES AND THEIR LOCATIONS.

FIRE ALARM RISER DIAGRAM

FIRE ALARM SYSTEM NOTES

1. THE RISER DIAGRAM IS INTENDED TO CONVEY THE TYPES OF FIRE ALARM CONNECTIONS AND SPECIFICALLY DOES NOT INDICATE QUANTITIES, NUMBER OF CIRCUITS REQUIRED OR DISTANCES.
2. THE COMPLETE FIRE ALARM SYSTEM SHALL MEET ALL APPLICABLE CODES AND MANUFACTURER'S RECOMMENDATIONS.
3. SUB-CONTRACTOR SHALL COORDINATE ALL WIRE SIZES, TYPES AND REQUIREMENTS WITH THE VENDOR PRIOR TO BID.
4. ALL +120VAC WIRING REQUIRED FOR OPERATION OF THE SYSTEM AS DESCRIBED IN THE CONSTRUCTION DOCUMENTS SHALL BE PROVIDED BY THE SUB-CONTRACTOR.
5. ALL NECESSARY RELAYS MAY NOT BE SHOWN ON THIS PLAN, BUT WHERE REQUIRED FOR PROPER OPERATION OF THE SYSTEM THEY SHALL BE PROVIDED BY THE SUB-CONTRACTOR.
6. FIRE ALARM WIRING SHALL BE INSTALLED IN CONDUIT. MINIMUM CONDUIT SIZE SHALL BE 3/4" IMC THREADED CONNECTIONS.
7. WIRING METHODS, CONDUIT, SUPPORTS, JUNCTION BOXES, TERMINAL BOXES, ETC. SHALL BE INSTALLED IN STRICT ACCORDANCE WITH THE NATIONAL ELECTRICAL CODE, NFPA-70, 2005 EDITION.
8. CONDUIT ROUTING, WIRE TYPE AND GAUGE ARE FOR REFERENCE ONLY, THE SUBCONTRACTOR SHALL DESIGN AND INSTALL THE FIRE ALARM SYSTEM IN STRICT ACCORDANCE WITH NFPA-72, FIRE ALARM CODE, 2007 EDITION, AND THE MANUFACTURER'S REQUIREMENTS.
9. WIRE NUTS APPROPRIATELY SIZED FOR THE GAUGE OF WIRE ARE ACCEPTABLE IN JUNCTION BOXES ONLY. ALL WIRE NUTS SHALL BE SECURED WITH ELECTRICAL TAPE.
10. ALL JUNCTION BOX COVERS SHALL BE PAINTED "RED" AND LABELED, "FIRE ALARM CIRCUIT". PROVIDE INTERNAL BATTERY BACK-UP SYSTEM.
11. SUBCONTRACTOR SHALL PROGRAM FACP WITH BY-PASS OR FUNCTION KEYS FOR CUSTOM CONTROL OF NOTIFICATION DEVICES AND SUBFUNCTIONS FOR TESTING AND MAINTENANCE PURPOSES, COORDINATE WITH FERMILAB'S FIRE TECHS.

AIR SAMPLING SMOKE DETECTION CRITERIA

1. AIR SAMPLING SMOKE DETECTORS SHALL BE VESDA.
2. AIR SAMPLING SMOKE SYSTEM SHALL BE PROVIDED AT THE AREAS INDICATED ON BID DESIGN DOCUMENTS.
3. THE CONTROL UNIT SHALL BE POWERED BY 120VAC SOURCE AND BE MONITORED FOR ALARM BY THE BUILDING'S FIRE ALARM CONTROL (XLS) PANEL. PRE-ALARM, (SUPERVISORY) AND TROUBLE CONDITIONS SHALL BE MONITORED BY THE FERMILAB'S FIRUS SYSTEM.
4. SAMPLING PIPING SHALL BE CPVC BLAZEMASTER OR SPEARS (ORANGE) SCHEDULE 40. PIPE JOINTS SHALL BE AIRTIGHT AND PERMANENTLY FIXED BY A PVC SOLVENT CEMENT.
5. SAMPLING PORTS IN CPVC PIPING SHALL BE SIZED BY THE MANUFACTURER'S VENDOR REPRESENTATIVE AND IDENTIFIED BY PLACEMENT OF A RED LABEL OR STICKER.
6. SAMPLING PIPE SYSTEM SHALL BE CLOSED END DESIGN.
7. AIR SAMPLING SYSTEMS SHALL BE CALCULATED PNEUMATICALLY BALANCED, SAMPLING RATE SHALL BE CONSISTENT, = OR NOT LESS THAN 20% BETWEEN SAMPLING POINTS (HOLES).

GENERAL ELECTRICAL EQUIPMENT SCHEDULE

THE SYMBOLS AND THE EQUIPMENT SCHEDULE ARE FOR THE CONVENIENCE OF THE CONTRACTOR. EACH CONTRACTOR SHALL BE RESPONSIBLE FOR VERIFICATION OF QUANTITIES AND SHALL FURNISH ALL MATERIAL REQUIRED, WHETHER SPECIFIED OR NOT, TO PRODUCE A SATISFACTORY WORKING SYSTEM.

CATALOG NUMBERS SHALL NOT BE CONSIDERED COMPLETE BUT ARE GIVEN ONLY TO AID THE CONTRACTOR IN THE SEARCH FOR MATERIAL. NO MATERIAL SHALL BE ORDERED BY MANUFACTURER AND CATALOG NUMBER ONLY. EACH CONTRACTOR SHALL FIRST READ THE COMPLETE DESCRIPTION OF THE MATERIAL ON THESE DREAWINGS AND SPECIFICATIONS. THE FIRST MANUFACTURER LISTED IS THE BASIS OF DESIGN. "STANDARD COLOR" INDICATES FACTORY FINISH AVAILABLE AT NO ADDITIONAL CHARGE.

ITEM NO.	SYMBOL	DESCRIPTION	APPROVED MANUFACTURERS
1	F	FIRE ALARM MANUAL PULL STATION, ADDRESSABLE, SINGLE ACTION, RESET KEY LOCK, RED WITH PLASTIC BREAKROD HIGH-ABUSE PLASTIC OR CAST METAL CONSTRUCTION WITH WHITE LETTERING.	SIEMENS
2	A1 A3 A7 AH	FIRE ALARM VOICE/VISUAL NOTIFICATION APPLIANCE, SPEAKER WITH HIGH-INTENSITY STROBE, WALL MOUNT, RED HOUSING WITH WHITE LETTERING OR PICTOGRAM, 25 VRMS, MINIMUM OF 4 TAP SETTINGS WHICH SHALL ALLOW FIELD ADJUSTMENT OF THE SOUND OUTPUT ACROSS A MINIMUM RANGE OF 78-87 DBA (UL 1480), 400Hz-4KHZ (6dBA CUTOFF) FREQUENCY RANGE. CANDELA RATINGS: A1=15, A3=30, A7=75, AND AH=110. CANDELA RATING SHALL BE VISIBLE FROM THE OUTSIDE OF THE DEVICE.	SIEMENS
3	FACP-SFDB	VOICE FIRE ALARM CONTROL PANEL, ADDRESSABLE SYSTEM, FEATURING INTERFACE WITH ANALOG SENSING INITIATING DEVICES, EXPANDABLE MODULAR DESIGN, MICROPROCESSOR BASED ELECTRONICS, 120 VAC OPERATION, SURFACE MOUNT. REFER TO SPECIFICATIONS FOR COMPLETE REQUIREMENTS.	SIEMENS FIRE FINDER XLS
4	MM	FIRE ALARM ADDRESSABLE MONITOR MODULE FOR CONVENTIONAL CLASS B CIRCUITS, 24 VDC, 4-WIRE OPERATION, INTEGRAL END-OF-LINE RESISTOR/RELAY, PROVIDE A SURFACE ENCLOSURE WHERE LOCATED ABOVE CEILING OR IN UNFINISHED SPACE. PROVIDE A FLUSH ENCLOSURE IN FINISHED SPACE.	SIEMENS
5	FS	CONNECTION TO FLOW SWITCH TO MONITOR FIRE PROTECTION FLOW SWITCH OR DISCHARGE OUTPUT CONTACTS. NORMALLY-OPEN DRY CONTACTS FOR FIRE ALARM INTERFACE, FURNISHED AND INSTALLED BY M.C., WIRED BY E.C.	BY M.C.
6	MS	CONNECTION TO MONITOR SWITCH TO MONITOR FIRE PROTECTION SYSTEM SUPERVISORY SWITCHES OR OUTPUT CONTACTS. NORMALLY-OPEN DRY CONTACTS FOR FIRE ALARM INTERFACE, FURNISHED AND INSTALLED BY M.C., WIRED BY E.C.	BY M.C.
7	A	FIRE ALARM VOICE NOTIFICATION APPLIANCE, SPEAKER, WALL MOUNT, RED HOUSING, 25 VRMS, MINIMUM OF 4 TAP SETTINGS WHICH SHALL ALLOW FIELD ADJUSTMENT OF THE SOUND OUTPUT ACROSS A MINIMUM RANGE OF 78-87 DBA (UL 1480), 400Hz-4KHZ (6dBA CUTOFF) FREQUENCY RANGE.	SIEMENS
8	VESDA-SFDB1 VESDA-SFDB2	VERIFY EARLY SMOKE DETECTION APPARATUS SYSTEM. SYSTEM SHALL INCLUDE DETECTOR CONTROL PANEL, PIPING, INTERFACE TO BUILDING FIRE ALARM SYSTEM, UL LISTED.	XTRALIS
9	AR	FIRE ALARM ADDRESSABLE RELAY CONSISTING OF AN ADDRESSABLE CONTROL MODULE AND SLAVE RELAY WITH CONTACTS SUITABLE FOR CONTROLLING THE DESIGNATED AUXILIARY LOAD, 24 VDC, 4-WIRE OPERATION, PROVIDE A SURFACE ENCLOSURE WHERE LOCATED ABOVE CEILING OR IN UNFINISHED SPACE. PROVIDE A FLUSH ENCLOSURE IN FINISHED SPACE.	SIEMENS

FIRE ALARM OPERATION MATRIX

SYSTEM INPUTS \ SEQUENCE OF OPERATION		PANEL/ANNUNCIATOR ALARM INDICATION	PANEL/ANNUNCIATOR SUPERVISORY INDICATION	PANEL/ANNUNCIATOR TROUBLE INDICATION	AUDIBLE ALARMS SEQUENCE	VISUAL ALARMS SEQUENCE	AR SEND ALARM SIGNAL TO COMM. CENTER.	AR SEND SUPERVISORY SIGNAL TO COMM. CENTER	AR AHU SHUTDOWN SEQUENCE
FIRE ALARM PANEL, TRANSPONDER, NAC PANEL LOW BATTERY			X					X	
FIRE ALARM PANEL, TRANSPONDER, NAC PANEL BATTERY OR CHARGER FAILURE				X					
FIRE ALARM PANEL, TRANSPONDER, NAC PANEL ABNORMAL SWITCH OR CONTROL POSITION.			X					X	
FIRE ALARM PANEL, TRANSPONDER, NAC PANEL GROUND FAULT, OPEN CIRCUIT, SHORT CIRCUIT				X					
FIRE ALARM PANEL, TRANSPONDER, NAC PANEL AC POWER LOSS OR IRREGULARITY				X					
NOTIFICATION APPLIANCE CIRCUIT OR SLC LOOP GROUND FAULT, OPEN CIRCUIT, SHORT CIRCUIT				X					
INITIATING DEVICE FAILURE OR COMMUNICATION ERROR				X					
FIRE ALARM PANEL MANUAL FIRE DRILL			X		X	X		X	
MANUAL PULL STATION	F	X			X	X	X		
SPRINKLER SYSTEM FLOW SWITCH	FS MM	X			X	X	X		X
SPRINKLER SYSTEM MONITOR SWITCH	MS MM		X					X	
AIR SAMPLING SMOKE DETECTION SYSTEM	VESDA	X			X	X	X		X
SMOKE DETECTOR	SD	X			X	X	X		X

REV.	DATE	REVISIONS
5	03/02/15	ISSUED FOR 90% REVIEW
4	02/23/15	ISSUED FOR 90% COST ESTIMATE
3	01/26/15	ISSUED FOR 60% REVIEW
2	01/16/15	ISSUED FOR PRICING
1	12/23/14	SCHEMATIC DESIGN

KJWW ENGINEERING CONSULTANTS
The FUTURE. Built SMARTER.®
1100 WARRENVILLE ROAD, SUITE 400W
NAPERVILLE, ILLINOIS 60563
630.527.2320 FAX: 630.527.2321
www.kjww.com
PROJECT #:
Illinois Design Firm Registration #184-000973

KJWW ENGINEERING RESERVES PROPRIETARY RIGHTS, INCLUDING COPYRIGHTS, TO THIS DRAWING AND THE DATA SHOWN THEREON. SAID DRAWING AND/OR DATA ARE THE EXCLUSIVE PROPERTY OF KJWW ENGINEERING AND SHALL NOT BE USED OR REPRODUCED FOR ANY OTHER PROJECT WITHOUT THE EXPRESS WRITTEN APPROVAL AND PARTICIPATION OF KJWW ENGINEERING. © 2015 KJWW, P.C.

REFERENCE SCALE IN INCHES
0 1 2 3

FERMI LAB		DATE
DESIGNED	T. BALA	3/2/2015
DRAWN	M. WELLS	3/2/2015
CHECKED		
APPROVED		
SUBMITTED		

SCALE:

NOT FOR CONSTRUCTION

FERMI NATIONAL ACCELERATOR LABORATORY
UNITED STATES DEPARTMENT OF ENERGY

SBN FAR DETECTOR BUILDING
FIRE ALARM MATERIAL LIST AND DETAILS

DRAWING NO. 6-7-93 FA-4 REV. 5

02 MAR. 2015

C:\Revit Local Files\MEP15_14.0872.00 - Fermi Lab - Far Detector_CENTRAL_wellsma.rvt

3/2/2015 5:17:58 PM