Engineering
Facilities Engineering Services Section
630.840.8501 (phone)
630.840.4980 (fax)

Memorandum

April 10, 2015

To: P. Wilson, Neutrino Division

From: S. Dixon, FESS/Engineering

Re: Readiness Review Response
SBN Far Detector Building
FESS/Engineering Project No. 6-7-93

A Readiness Review was held on March 17, 2015 to review the status of the construction documents for the SBN Far Detector Building in anticipation of issuing the documents for competitive procurement. This memo describes the action items and the subsequent follow up information.

Attendees
P. Wilson, K. Kephart, L. Bagby, C. James, C. Montanari (via phone), A. Scaramelli (via phone)
M. Nessi (via phone), B. Norris, M. Geynisman, R. Rameika, M. Blewitt (Holabird & Root)
E. Wagner (Holabird & Root), S. Dixon

Action Items
Listed below are the action items developed as a result of the review followed by the responses:

Item 1 – Detector Envelope
In order to provide adequate space for the detector, the dimensions of the detector envelope are required as well as the space needed above the detector for access and equipment. C. Montanari and M. Nessi were tasked with providing the following information:

a) Confirmation of the detector envelope including warm cryostat and equipment on top. A 3d model or sketch would help.
b) Need working envelope required for access/removal of components for maintenance and repair.
c) Reserved space for mounting cosmic veto counters.

Response for Item 1 – Detector Envelope
In an email, dated March 20, 2015, C. Montanari provided the following:

- Warm Vessel: 23 m (75.44 feet) long by 10.3 m (33.78 feet wide) by 6.15 m (20.17 feet) tall;
- Clear space above the warm vessel: 3.3 m (10.82 feet);
- Cryogenic Equipment: 3 m (9.84 feet) downstream (north) of the Warm Vessel;

A review of the drawings indicates that a clear space of 27.4 m (90 feet) long by 12.2 m (40 feet) wide x 2.7 m (9 feet) above the warm vessel. While the warm vessel will fit within the footprint of the space provided, the design will require modification to provide the 3.3 m (10.82 feet) of clear space above warm vessel.

Item 2 – Detector Power and Heat Load

When the ICARUS detector was installed in Gran Sasso, it incorporated a system of recirculated cooling utilizing Stirling equipment. The current cryogenic scheme is based on a LN2 open loop system which results in less heat load rejected to the building. C. Montanari and A. Scaramelli were tasked with providing the following information:

a) Confirm the power and heat load for the detector;
b) Which part of the electrical load requires isolated power;

Response for Item 2 – Detector Power and Heat Load

In an email, dated March 20, 2015, C. Montanari provided the following:

a) Detector Power: 100 kw (55 kw for TPC, 25 kw Veto and 20 kw spare). It is assumed that this is fed from the isolated electrical system
b) Cryogenic Power: 150 kw. It is assumed that this power is fed from the building power system;
c) There is a requirement for 2 x 1 MVA transformers. This requirement was clarified during the 08APR15 teleconference to indicate that a two (2) transformer system is preferred, but that the size should be based on the power requirements.
d) UPS Power: Required for Control and Monitoring system;
e) It is assumed that all power is converted to heat;
f) Temperature: Below 30 degrees Celsius (86 degrees Fahrenheit);
g) Humidity: Above dew point;
h) It was noted during the 08APR15 teleconference that the new electrical equipment should be designed to operate at 60 hertz. Equipment relocated from CERN will be delivered with the required transformers to operate at 60 hertz;
i) It was noted during the 08APR15 teleconference that the electrical equipment will fit within the 3 m (9.84 feet) space downstream (north) of the Warm Vessel;
j) It was noted during the 08APR15 teleconference that a single line electrical diagram of the CERN provided equipment is needed prior to installation to coordinate the equipment and electrical services;
k) It was noted during the 08APR15 teleconference that a “closed transition” for the automatic transfer switch is likely needed to meet Fermilab ODH requirements.

A review of drawing E-12 indicates that the isolated (detector) power includes two (2) 112.5 kVA distribution panels for detector racks. Panel PP-SFDBB1-A1 is located on east of the Mezzanine Level and panel PP-SFDBB1-B1 is located on west of the Mezzanine Level. These two (2) systems exceed the 100 kw requirement. However, it is not certain if the requirements described in the March 20, 2015 email response includes the power for the all the networking equipment and related systems. In order to provide some spare capacity, the two (2) 112.5 kVA distribution panels will be reduced to 75 kVA systems, providing a combined total of 150 kVA.

A review of drawing E-12 indicates that the normal (building) power includes a 75 kVA distribution panel for cryogenic loads (PP-SFDBA1-C1) and an additional 75 kVA distribution panel for building racks (PP-SFDBA1-A1). The total of these two (2) systems is 150 kVA which is approximately equal to the requirement. The current design indicated that the “building racks” panel and transformer (PP-SFDBA1-A1) is located on the Grade Level rather than on the Enclosure Level. The design will be modified to provide the 150 kVA of power at the north end of the Detector Level.

A review of drawing E-13 indicated that the normal (building) power includes a 10 kVA distribution panel (EPP-UPS-SFDBBA1-A1-1) with an uninterruptible power supply (UPS) connected to the emergency generator. This system is located on the Enclosure Level and intended to provide uninterrupted power for the Control and Monitoring equipment.

The HVAC system serving the building has been designed to maintain a temperature range of 22-28 degrees Celsius (72-83 degrees Fahrenheit) and a humidity level below the dew point to prevent condensation. It was noted during the 08APR15 teleconference that humidification will not be included in the initial bid package, but reasonable provisions should be included if it is determined that humidification is needed at a later date. This requirement will be communicated to the design team.

Item 3 – Cryo Filter Regeneration Heat Load

The current cryogenic scheme assumes that during regeneration of the Cu filters an increase in the heat load will occur. M. Geynisman was tasked with providing the following information:

a) What is the frequency and duration of the regeneration operation;
b) What is the expected temperature rise;
c) Given the infrequent nature of this operation, are any building modifications required;
d) Is there a ES&H requirement/impact for this operation.

Response for Item 3 – Cryo Filter Regeneration Heat Load

A 24MAR15 email from M. Geynisman included the following response:

a) Assume 40 times total for the life of the detector. Frequency varies, as after initial fill it could be up to once a week, but only once in few months during stable operations;
b) The heat load to the building will be minimal in both duration (24 hrs.) and level (less than 1 kW);
c) No special ES&H requirements for regeneration heating of the filter media, except insulation of hot piping surfaces and posting "hot surface".

Based on this information no modifications to the building systems is anticipated.

Item 4 – Grounding Plan

The construction document includes requirements for the installation of an extensive grounding system based on the “ufer” grounding system used at past projects designed by Fermilab. C. Montanari was tasked with reviewing the grounding plan.

Response for Item 4 – Grounding Plan

In an email, dated March 20, 2015, C. Montanari provided a presentation on the grounding requirements. On March 23, 2015, L. Bagby proposed incorporating the recent LBNE and MicroBooNE experience for the grounding requirements for the SBN Far Detector. It was noted during the 08APR15 teleconference that this requirement and design approach will be discussed in detail in the following weeks.

Item 5 – Oxygen Deficiency Hazard Preliminary Review

The current construction document include a system to accommodate the Oxygen Deficiency Hazard (ODH) requirements. It was recognized that this concept will require approval of the Fermilab Cryogenic Safety Subcommittee (CSS). M. Geynisman was tasked with developing a short description of the ODH mitigation scheme.

Response for Item 5 – Oxygen Deficiency Hazard Preliminary Review

M. Geynisman developed a preliminary description of the proposed system for the SBN Far Detector Building. This description is contained in SBN-doc-337, version 1. It is recognized that changes may be required based on the CSS review and approval.

Item 6 – West Overhead Door Height

The current construction document include a 16 foot wide by 14 foot tall overhead door at the west end of the Loading Dock at Grade Level. In order to accommodate equipment or deliveries taller than 14 feet, a taller door should be considered. S. Dixon was tasked with investigating the tallest practical door height.

Response for Item 6 – West Overhead Door Height

Discussions with Holabird & Root indicate that the current design provides a clear height of 14'-5" at the Loading Dock. Based on the door equipment and supporting structure it is possible to install a 15 foot high door. However, this would require a reworking of the ductwork at this location to accommodate this change. One possible option is to raise the door height to 15 feet and leave the ductwork at the current height but design in a removable section at the Loading Dock that could be removed to accommodate deliveries higher than 14'-5". This would require signage and notification to ensure that the height restrictions are properly documented and communicated. It was noted during the 08APR15 teleconference that the door height will be increased to 15 feet.

Other Technical Requirements

The email from C. Montanari dated March 20, 2015 contained additional Technical Requirements not specifically addressed in the Action Items above. Listed below are those items and the response to each:

1. Cranes – The current construction documents are based on the installation of two (2) 30 ton capacity overhead bridge cranes. Drawing S-10 contains the plans, details and limits of the cranes. It is noted that, at this time, the procurement of the overhead cranes are not part of the scope of work for the project.
2. Cooling Water – There is no requirement for cooling water.
3. Separation Wall – There is a requirement for a 3-4 meter (9.84 feet – 13.12 feet) high separation wall around ICARUS and the Cryogenics area. It is assumed that this requirement is met since the detector will be located 10.4 m (34 feet) below grade in a dedicated enclosure.
4. Oxygen Deficiency Hazard Mitigation – Fermilab standards will dictate the mitigation of ODH issues. M. Geynisman has developed a position paper to be submitted to the Fermilab Cryogenic Safety Subcommittee for review.
5. Control Room – There is a requirement for a 4 x 6 square meter (13.12 feet x 19.68 feet) space as a control room for Data Acquisition, Slow Controls and Networking equipment. The current plan places this equipment on the mezzanine level at the east and west sides of the warm vessel. The shift crew operations for the SBN Far Detector will take place in the ROC-West control room located in Wilson Hall.

Encl. Drawing E-12
Drawing E-13
C. Montanari email with attachments, dated 20MAR15
L. Bagby email with attachments, dated 23MAR15
M. Geynisman email, dated 24Mar15
Section at Overhead Door

Cc: Attendees
J. Niehoff, FESS/E
Project File 6-7-93
SBN-doc-380

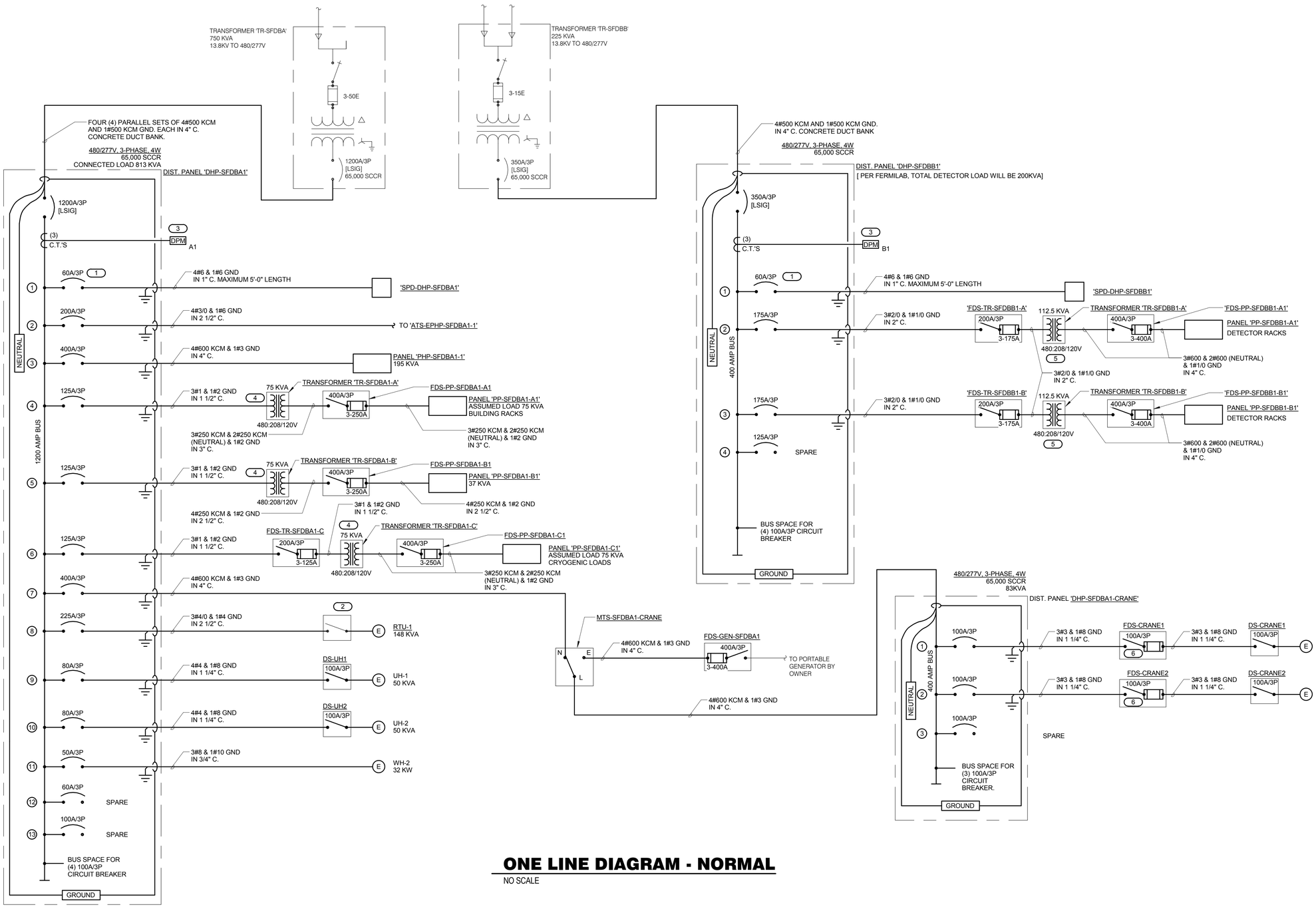

ONE LINE DIAGRAM - NORMAL

NO SCALE

GENERAL SHEET NOTES

1. REFER TO SHEET E-1 FOR GENERAL ELECTRICAL NOTES, ELECTRICAL INSTALLATION NOTES AND ONE LINE DIAGRAM NOTES.
2. REFER TO SHEET E-18 THROUGH E-20 FOR PANEL SCHEDULES.
3. REFER TO SHEET E-23 FOR GENERAL ELECTRICAL EQUIPMENT SCHEDULE.
4. REFER TO SHEET E-22 FOR DISCONNECT AND STARTER SCHEDULE, VARIABLE FREQUENCY DRIVE SCHEDULE, TRANSFORMER SCHEDULE AND TRANSFER SWITCH SCHEDULE.
5. ALL CIRCUIT BREAKERS SHALL HAVE FACTORY INSTALLED PERMANENTLY MOUNTED LOCKS.

KEYNOTES (#)

1. VERIFY CIRCUIT BREAKER AND WIRE SIZE WITH SPD MANUFACTURER.
2. DISCONNECT SWITCH PROVIDED WITH EQUIPMENT.
3. CONNECT METER TO CAMPUS METERING SYSTEM. PROVIDE ALL REQUIRED HARDWARE AND PROGRAMMING FOR COMPLETE AND FUNCTIONING SYSTEM.
4. REFER TO TRANSFORMER WIRING DIAGRAM 2/E-13.
5. REFER TO FLOOR PLAN FOR TRANSFORMER GROUNDING DESCRIPTION.
6. FUSED PER CRANE APPROVED SHOP DRAWINGS.

REVISIONS

KJWW ENGINEERING CONSULTANTS
The FUTURE. Built SMARTER.®
623 26TH AVENUE
QUAD CITIES, ILLINOIS 61201
309.788.0673 FAX: 309.786.5967
www.kjww.com
PROJECT # 14.0872.00
Illinois Design Firm Registration #184-000973

KJWW ENGINEERING RESERVES PROPRIETARY RIGHTS, INCLUDING COPYRIGHTS, TO THIS DRAWING AND THE DATA SHOWN THEREON. SAID DRAWING AND/OR DATA ARE THE EXCLUSIVE PROPERTY OF KJWW ENGINEERING AND SHALL NOT BE USED OR REPRODUCED FOR ANY OTHER PROJECT WITHOUT THE EXPRESS WRITTEN APPROVAL AND PARTICIPATION OF KJWW ENGINEERING. © 2015 KJWW, P.C.

REFERENCE SCALE IN INCHES
0 1 2 3

	FERMI LAB	DATE
DESIGNED	T. BALA	3/30/2015
DRAWN	M. WELLS	3/30/2015
CHECKED	J. LEESMAN	3/30/2015
APPROVED		
SUBMITTED		

SCALE:

FERMI NATIONAL ACCELERATOR LABORATORY
UNITED STATES DEPARTMENT OF ENERGY

SBN FAR DETECTOR BUILDING
ONE LINE DIAGRAM - NORMAL

DRAWING NO. 6-7-93 E-12 REV. 0

30 MAR. 2015

C:\Revit Local Files\MEP15_14.0872.00 - Fermi Lab - Far Detector_CENTRAL_eighnerjb.rvt

3/30/2015 2:38:03 PM

GENERAL SHEET NOTES

1. REFER TO SHEET E-1 FOR GENERAL ELECTRICAL NOTES , ELECTRICAL INSTALLATION NOTES AND ONE LINE DIAGRAM NOTES.
2. REFER TO SHEET E-18 THROUGH E-20 FOR PANEL SCHEDULES.
3. REFER TO SHEET E-23 FOR GENERAL ELECTRICAL EQUIPMENT SCHEDULE.
4. REFER TO SHEET E-22 FOR DISCONNECT AND STARTER SCHEDULE, VARIABLE FREQUENCY DRIVE SCHEDULE, TRANSFORMER SCHEDULE AND TRANSFER SWITCH SCHEDULE.
5. ALL CIRCUIT BREAKERS SHALL HAVE FACTORY INSTALLED PERMANENTLY MOUNTED LOCKS.

KEYNOTES (#)

1. VERIFY CIRCUIT BREAKER AND WIRE SIZE WITH SPD MANUFACTURER.
2. ROUTE CONTROL WIRING PER MANUFACTURER REQUIREMENTS IN CONDUIT.
3. REFER TO TRANSFORMER WIRING DETAIL 2/E-13.

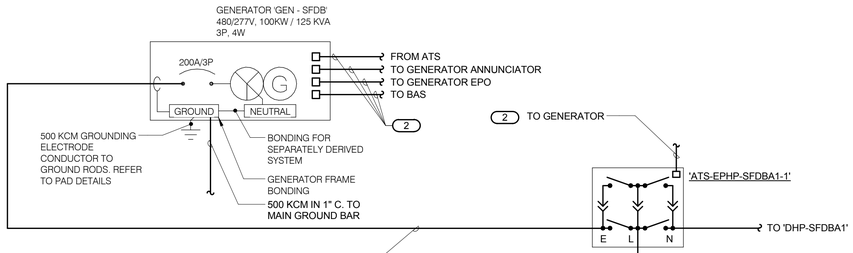

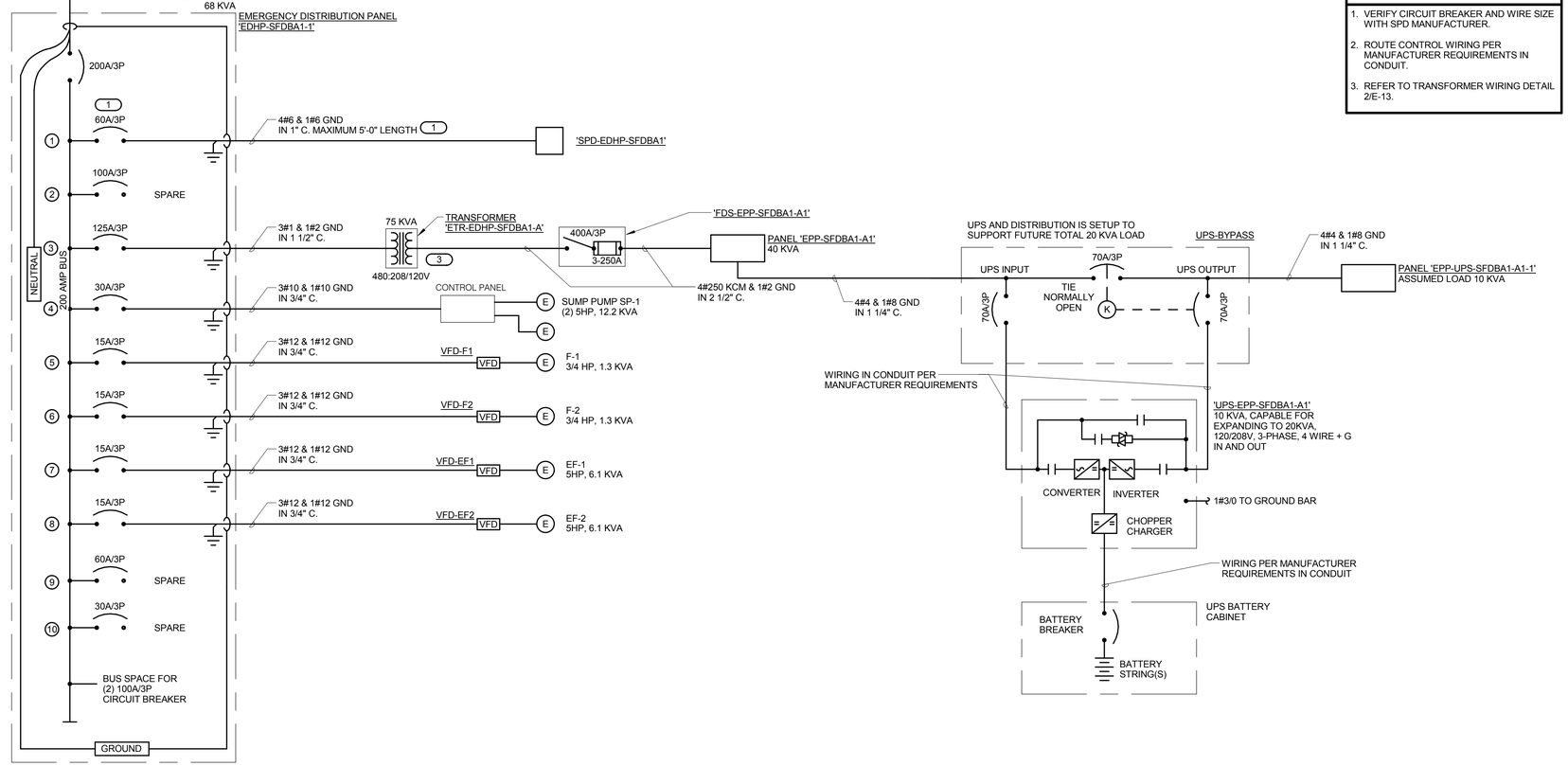

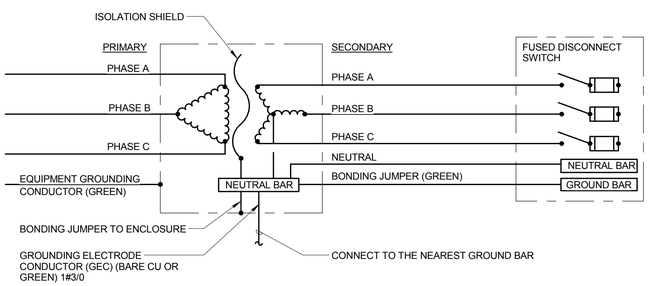

TRANSFORMER WIRING DETAIL

NO SCALE

ONE LINE DIAGRAM - EMERGENCY

NO SCALE

REVISIONS		

KJWW ENGINEERING CONSULTANTS
The FUTURE. Built SMARTER.®
623 26TH AVENUE
QUAD CITIES, ILLINOIS 61201
309.788.0673 FAX: 309.786.5967
www.kjww.com
PROJECT # 14.0872.00
Illinois Design Firm Registration #184-000973

KJWW ENGINEERING RESERVES PROPRIETARY RIGHTS, INCLUDING COPYRIGHTS, TO THIS DRAWING AND THE DATA SHOWN THEREON. SAID DRAWING AND/OR DATA ARE THE EXCLUSIVE PROPERTY OF KJWW ENGINEERING AND SHALL NOT BE USED OR REPRODUCED FOR ANY OTHER PROJECT WITHOUT THE EXPRESS WRITTEN APPROVAL AND PARTICIPATION OF KJWW ENGINEERING. © 2015 KJWW, P.C.

REFERENCE SCALE IN INCHES
0 1 2 3

	FERMI LAB	DATE
DESIGNED	T. BALA	3/30/2015
DRAWN	M. WELLS	3/30/2015
CHECKED	J. LEESMAN	3/30/2015
APPROVED		
SUBMITTED		

SCALE:

FERMI NATIONAL ACCELERATOR LABORATORY
UNITED STATES DEPARTMENT OF ENERGY

SBN FAR DETECTOR BUILDING

ONE LINE DIAGRAM - EMERGENCY

DRAWING NO. 6-7-93 E-13 REV. 0

30 MAR. 2015

C:\Revit Local Files\MEP15_14.0872.00 - Fermi Lab - Far Detector_CENTRAL_eighnerjb.rvt

3/30/2015 2:38:04 PM

Steven J Dixon

From: Claudio Montanari <Claudio.Montanari@pv.infn.it>
Sent: Friday, March 20, 2015 9:42 AM
To: Steven J Dixon
Cc: Peter J Wilson; Karen M Kephart; Linda F Bagby; Catherine C James; Claudio Montanari; Alberto Scaramelli; Marzio Nessi; Barry L Norris; Michael G Geynisman; Robert K Plunkett; Regina Rameika
Subject: Re: SFDB - Readiness Review Action Items - Item #6 Response
Attachments: Technical_Infrastructure_IcarusFNAL.docx; warmvessel3D.dwg.zip; TRANSFORMER_GROUND.pptx

Dear Steve,
in the attached documents you will find the required information.
The word document lists our requirements for the technical infrastructure; this includes the power supply, heat load and requirements for conditioning/heating.
The powerpoint shows the schemes for grounding and isolation.
The dwg file is a 3d model of the warm vessel. It defines the detector envelope without the space for cryogenics (additional 3 m space at one end of the vessel towards the access, i.e. opposite to the beam direction).
The warm vessel is about 23 m long, 10.3 m wide, 6.15 m high. Additional
3.3 m are need on top of the warm vessel to host electronics, gas argon recirculators and the top part of the VETO system.

Please let us know if additional infos are needed.

Best regards,

Alberto, Claudio and Marzio

> Hi Peter - I worked with the A/E on the detail at the overhead door
> with the thought of increasing the height from 14' to 16'. The
> attached detail shows a section at the door with the coiling door hood and the HVAC duct.
> The lowest obstruction is the duct which is 14'-5" above the floor.
>
> Based on the size of the coiling door equipment and the roof structure
> above, it looks like we could raise the door about a foot (to 15' tall)
> before we'd have to raise the entire roof. We are still looking at
> changing the proportions of the duct segment at the loading dock, but
> that might impact the fire protection system since we'd likely have to
> make sure there is a sprinkler beneath the duct (which also cuts down
> of the clearance).
>
> As an alternate, we could provide a 15' high door and leave the duct
> as shown, but design in the section above the door to be removable.
> When we bring in items taller than 14'-5" we could remove the section.
> We'd probably want to call attention/highlight the lower duct with
> signage or floor markings to remind us when considering moves of
> objects taller than 14'-5"
>

> Steve
> -----Original Message-----
> From: Peter J Wilson
> Sent: Tuesday, March 17, 2015 11:24 PM
> To: Steven J Dixon; Karen M Kephart; Linda F Bagby; Catherine C James;
> Claudio Montanari; Alberto Scaramelli (Alberto.Scaramelli@cern.ch);
> Marzio Nessi; Barry L Norris; Michael G Geynisman; Robert K Plunkett;
> Regina Rameika
> Subject: SFDB - Readiness Review Action Items
>
> Hi,
> Thank you all for participation in today's review of the SBN far
> detector building. The following is the list of action items that I
> recorded in the meeting with a suggested responsible parties for
> addressing them and a timeframe for response. Please review and let
> me know if there are any corrections or missed items. Are the
> suggested response times sufficient for accurate response?
>
> 1. Detector envelope and space needed above the detector (working
> envelope). The distance between the top of the detector and concrete
> shielding appears to be smaller than the required 3m (what drives the
> 3m?).
> a) Need confirmation of the detector envelope including warm cryostat and
> equipment on top. A 3d model or sketch would help.
> b) Need working envelop required for access/removal of components for
> maintenance and repair.
> c) Reserved space for mounting cosmic veto counters.
> Responsible - Claudio and Marzio
> Timeframe - Friday 3/20
>
> 2. Confirm power and heat load from Gran Sasso operation (Claudio and
> Alberto) accounting for replacement of Stirling LN2 system with open loop.
> What part is on isolated detector power vs building power?
> Responsible - Claudio and Alberto
> Timeframe - Friday 3/20
>
> 3. Estimate of heat load for filter regeneration in case Cu filters
> are needed. Frequency of operation, duration of operation.
> a) given the infrequent nature of this operation, is it acceptable to
> have a temporary temperature rise? What temperature change is
> acceptable?
> b) Is there an ES&H requirement about regeneration heating?
> Responsible - Michael G
> Timeframe - Friday 3/20
>
> 4. Review grounding plan for detector
> Responsible - Claudio
> Timeframe - Friday 3/20
>
> 5. Initiate preliminary review of ODH ventilation plan with Cryo
> safety panel. Short description of plan (1-2page).
> Responsible - Barry and Michael

> Timeframe - ?
>
> 6. What is maximum practical rollup door height based on opening size
> in steel structure? Could it be 16'x16'? What is vertical clearance
> from ventilation duct to floor?
> Responsible - Steve
> Timeframe - Friday 3/20
>
> Regards, Peter
> -----
> Peter Wilson - Short Baseline Neutrino Program Neutrino Division Fermi
> National Accelerator Laboratory pjw@fnal.gov
> 630-840-2156
>
>
>
>

Tecnical Infrastructure for Icarus

1. Civil engineering

Realisation following FNAL Standards and Rules for experimental halls.

- Cranes:
  Capacity: ≥30 t

2. Mains

- **100 kW: 55 kW TPC electronics, 25 kW VETO counter, 20 kW spare**
- **150 kW: cryogenics & others**

  Total: 250 kW

  Trafos: 2x1 MVA

- **The general services (light, cooling, ventilation, heating, etc.) are NOT included.**
- **UPS for the control and monitoring system:**
- **See the attached slides for additional UPS and trafos for ground isolation.**
- **NOTE THAT, for dimensioning conditioning and air circulation, all the electrical power shall be considered to the converted into heat. Close to the detector is 100 kW for TPC + VETO and additional 20 kW from proximity cryogenics. Additional proximity item should be accounted after final localition has been established (consider 20% spare capacity).**

3. Conditioning, Heating

Following the FNAL Standards and Rules. Temperature to be kept above the dew point. Temperature to be kept below 30°C all over the experimental hall (below ground).

4. Cooling

No need of cooling water:

5. Safety

Following FNAL Standards and Rules.

Specific requirements:

- **Separation Wall** around ICARUS and cryogenics area 3-4 m height
- **Ventilation**
  Following FNAL safety instructions: 2 flow rates system, the minor always running, the higher in service in case of alarm.
  Aspiration at ground level, rejection outside the halls.
- **Safety sensors**: oxygen, smoke, temperature
- **Emergency ligths**
- **Cameras**
- **Audio Alarms**

6. Control Room

Computer environnement (DAQ, slow control system, etc.), 4x6 m2, in Far bldg.

Basic thesis

- For precision low noise measurement of analogue signal the engineer must separate different parts of electrical circuits to avoid influence from one part of instrument to another. Usually separation of digital and analogue parts can be done by dividing ground connection and DC or AC alimentation.

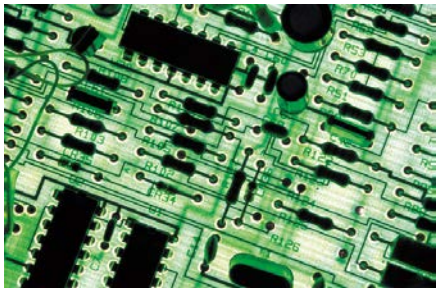

For big detector installation we have the same solution but in a different scale.
We consider as high current the instruments like pumps, motor generators and UPS. We know how make grounding of the different parts of all machines.
To avoid influence from high current machines to the sensitive parts of the detector we must separate connections to ground by creating different points of connection to ground and use isolation material to avoid electro mechanical connection between different parts of installation.

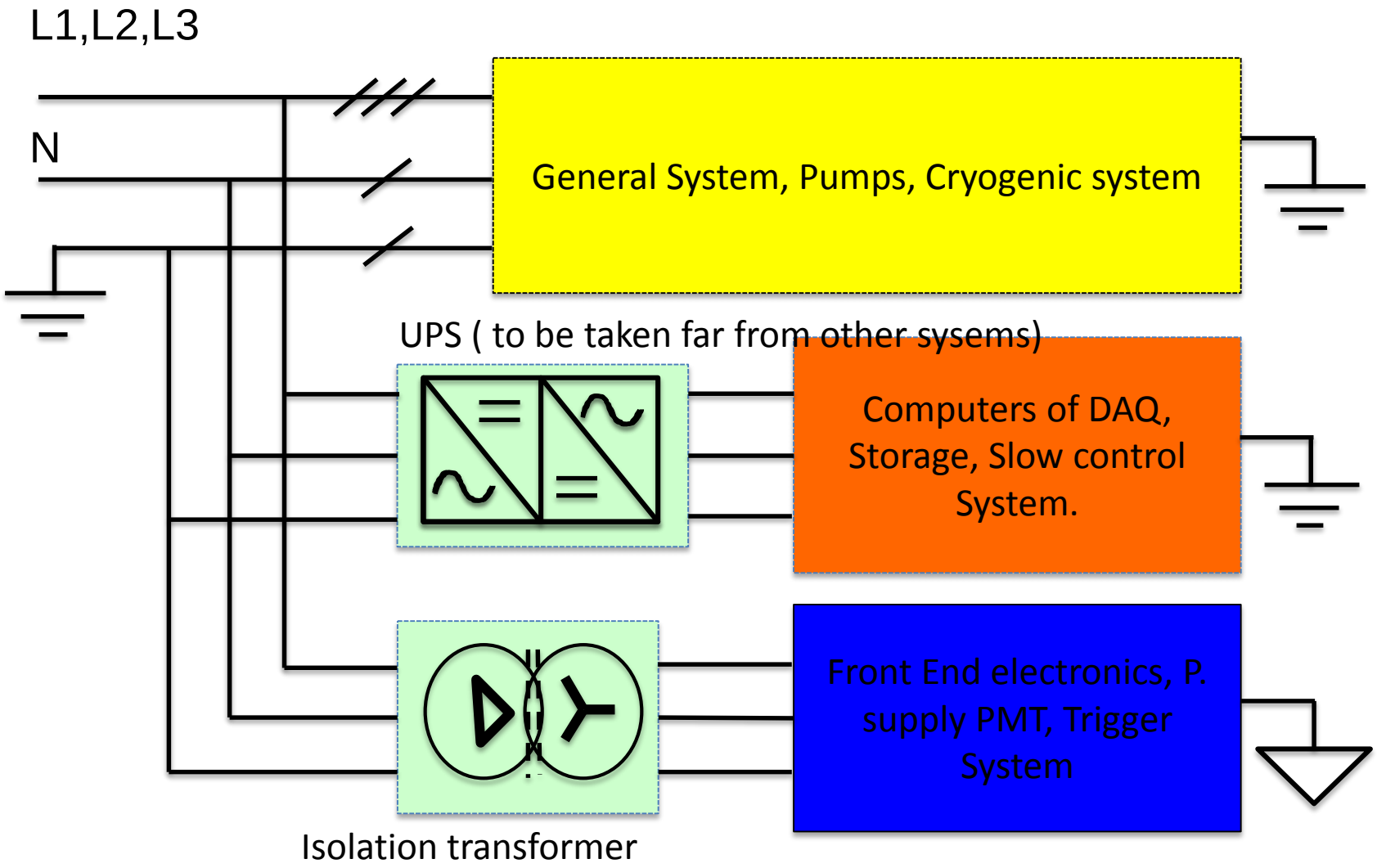

Pic.1. Basic layout of line connection.

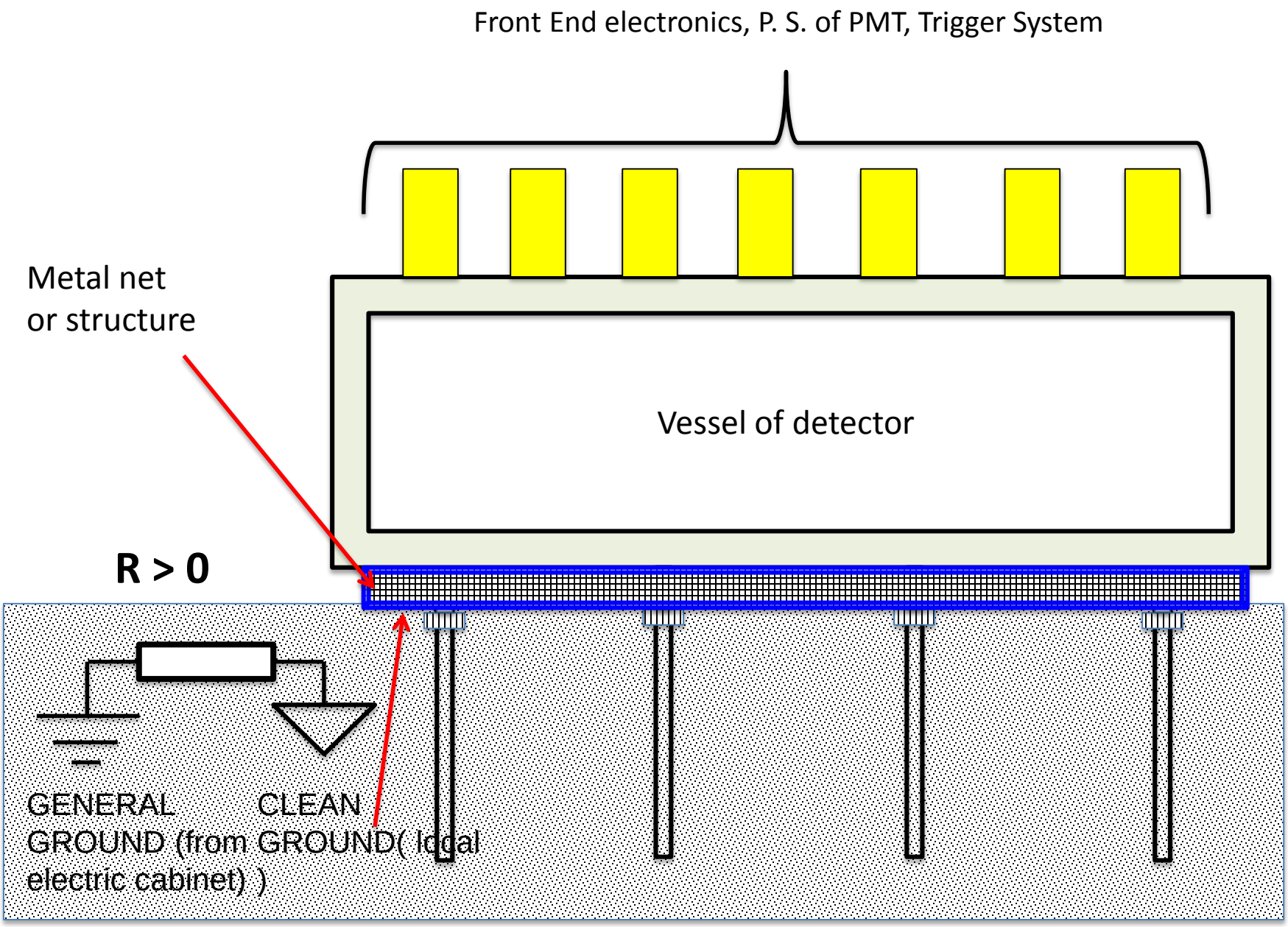
Front End electronics, P. S. of PMT, Trigger System
Metal net
or structure
Vessel of detector
R > 0
GENERAL
GROUND (from
electric cabinet))
CLEAN
GROUND(local

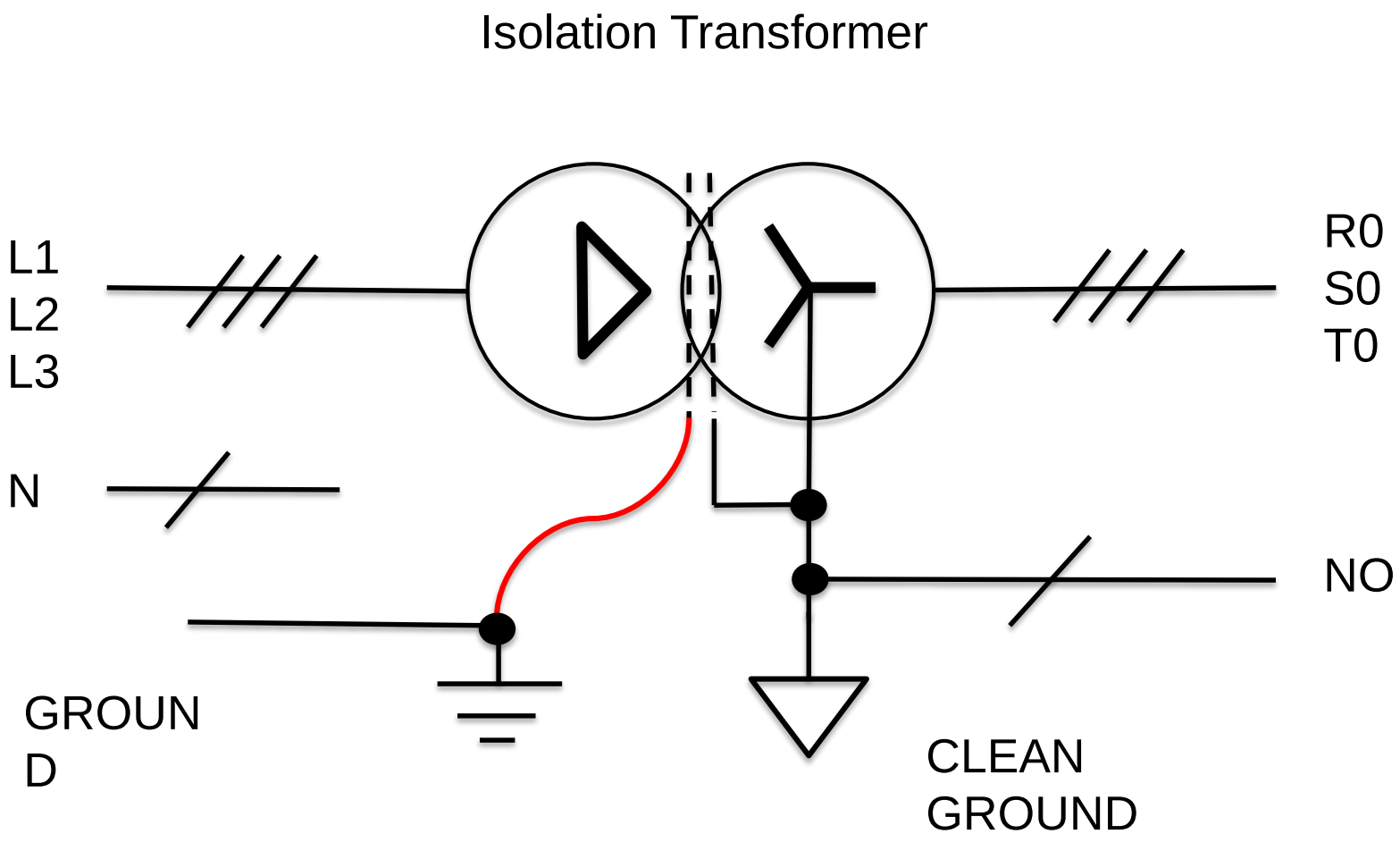

Pic.1. Basic Idea ground connection (according sheet S1180601_007.dwg).

Steven J Dixon

From: Linda F Bagby
Sent: Wednesday, March 25, 2015 8:45 AM
To: Claudio Montanari; Steven J Dixon
Cc: Peter J Wilson; Karen M Kephart; Catherine C James; Alberto Scaramelli; Marzio Nessi; Barry L Norris; Michael G Geynisman; Robert K Plunkett; Regina Rameika
Subject: RE: SFDB - Readiness Review Action Items - Item #6 Response
Attachments: Requirements.pdf; Structural.pdf

Hi,
Attached you will find the documents I propose we use as a reference in developing our requirements.

Linda

-----Original Message-----
From: Claudio Montanari [mailto:Claudio.Montanari@pv.infn.it]
Sent: Friday, March 20, 2015 9:42 AM
To: Steven J Dixon
Cc: Peter J Wilson; Karen M Kephart; Linda F Bagby; Catherine C James; Claudio Montanari; Alberto Scaramelli; Marzio Nessi; Barry L Norris; Michael G Geynisman; Robert K Plunkett; Regina Rameika
Subject: Re: SFDB - Readiness Review Action Items - Item #6 Response

Dear Steve,
in the attached documents you will find the required information.
The word document lists our requirements for the technical infrastructure; this includes the power supply, heat load and requirements for conditioning/heating.
The powerpoint shows the schemes for grounding and isolation.
The dwg file is a 3d model of the warm vessel. It defines the detector envelope without the space for cryogenics (additional 3 m space at one end of the vessel towards the access, i.e. opposite to the beam direction).
The warm vessel is about 23 m long, 10.3 m wide, 6.15 m high. Additional
3.3 m are need on top of the warm vessel to host electronics, gas argon recirculators and the top part of the VETO system.

Please let us know if additional infos are needed.

Best regards,

Alberto, Claudio and Marzio

> Hi Peter - I worked with the A/E on the detail at the overhead door
> with the thought of increasing the height from 14' to 16'. The
> attached detail shows a section at the door with the coiling door hood and the HVAC duct.
> The lowest obstruction is the duct which is 14'-5" above the floor.
>
> Based on the size of the coiling door equipment and the roof structure
> above, it looks like we could raise the door about a foot (to 15' tall)
> before we'd have to raise the entire roof. We are still looking at
> changing the proportions of the duct segment at the loading dock, but

> that might impact the fire protection system since we'd likely have to
> make sure there is a sprinkler beneath the duct (which also cuts down
> of the clearance).
>
> As an alternate, we could provide a 15' high door and leave the duct
> as shown, but design in the section above the door to be removable.
> When we bring in items taller than 14'-5" we could remove the section.
> We'd probably want to call attention/highlight the lower duct with
> signage or floor markings to remind us when considering moves of
> objects taller than 14'-5"
>
> Steve
> -----Original Message-----
> From: Peter J Wilson
> Sent: Tuesday, March 17, 2015 11:24 PM
> To: Steven J Dixon; Karen M Kephart; Linda F Bagby; Catherine C James;
> Claudio Montanari; Alberto Scaramelli (Alberto.Scaramelli@cern.ch);
> Marzio Nessi; Barry L Norris; Michael G Geynisman; Robert K Plunkett;
> Regina Rameika
> Subject: SFDB - Readiness Review Action Items
>
> Hi,
> Thank you all for participation in today's review of the SBN far
> detector building. The following is the list of action items that I
> recorded in the meeting with a suggested responsible parties for
> addressing them and a timeframe for response. Please review and let
> me know if there are any corrections or missed items. Are the
> suggested response times sufficient for accurate response?
>
> 1. Detector envelope and space needed above the detector (working
> envelope). The distance between the top of the detector and concrete
> shielding appears to be smaller than the required 3m (what drives the
> 3m?).
> a) Need confirmation of the detector envelope including warm cryostat and
> equipment on top. A 3d model or sketch would help.
> b) Need working envelop required for access/removal of components for
> maintenance and repair.
> c) Reserved space for mounting cosmic veto counters.
> Responsible - Claudio and Marzio
> Timeframe - Friday 3/20
>
> 2. Confirm power and heat load from Gran Sasso operation (Claudio and
> Alberto) accounting for replacement of Stirling LN2 system with open loop.
> What part is on isolated detector power vs building power?
> Responsible - Claudio and Alberto
> Timeframe - Friday 3/20
>
> 3. Estimate of heat load for filter regeneration in case Cu filters
> are needed. Frequency of operation, duration of operation.
> a) given the infrequent nature of this operation, is it acceptable to
> have a temporary temperature rise? What temperature change is
> acceptable?

> b) Is there an ES&H requirement about regeneration heating?
> Responsible - Michael G
> Timeframe - Friday 3/20
>
> 4. Review grounding plan for detector
> Responsible - Claudio
> Timeframe - Friday 3/20
>
> 5. Initiate preliminary review of ODH ventilation plan with Cryo
> safety panel. Short description of plan (1-2page).
> Responsible - Barry and Michael
> Timeframe - ?
>
> 6. What is maximum practical rollup door height based on opening size
> in steel structure? Could it be 16'x16'? What is vertical clearance
> from ventilation duct to floor?
> Responsible - Steve
> Timeframe - Friday 3/20
>
> Regards, Peter
> -----
> Peter Wilson - Short Baseline Neutrino Program Neutrino Division Fermi
> National Accelerator Laboratory pjw@fnal.gov
> 630-840-2156
>
>
>
>

Electrical Requirements for the LBNE Far Detector's Electrical Grounding System

Steve Chappa
17 March 2013
(Revised: 01 April 2014)

DRAFT

1.0 Introduction:

For the purpose of maintaining a low-noise performance within each of the proposed cryostat detectors, the construction of the LBNE far detectors' grounding system requires that there be separate grounding structures for the cryostat tank walls and for the cavern and its utilities. Both the cryostat detectors and the cavern structures will employ an Ufer ground, or concrete encased grounding electrodes, within the concrete construction. The guiding principle for the LBNE far detector's grounding system is to minimize, as much as possible, any ground currents from flowing between the AC power distribution system and the detector cryostats. Also, any flow of ground currents, both conducted and coupled, need to be minimized between the individual detector cryostats. Therefore, there are specific requirements for the connection and spacing of the reinforcing metal bars (rebar) set in the concrete for the cryostats' construction and for the specific and controlled interconnections between these separate grounding structures.

2.0 General Requirements:

2.1 There shall be electrical separation between the cavern's rebar/concrete/shot-crete construction and the cryostats' rebar/concrete construction. The rebar of one structure and the rebar of the other structure shall not come in direct contact with each other. The cavern's rock shall be considered part of the cavern's grounding structure. Thus the electrical isolation between the cavern rock and the cryostats' concrete pour shall be maintained.

At this time, the cavern and utility metal structures will be referred to as Cavern Ground. Each of the cryostats and their respective top plate construction will be referred to as Detector 1 Ground and Detector 2 Ground, respectively.

Electrical separation between grounding structures is defined as:

1. The effective AC impedance between the structures shall be a minimum of 10 ohms at 30 MHz.
2. The metal components of one grounding structure (rebar, structure support metal, etc.) shall not make contact with metal components of another grounding structure.
3. The DC electrical resistance shall be a minimum of 300 k-ohms.

2.2 The rebar for all four vertical walls and the cryostat floor concrete shall be integrated together in order to form a uniform grounding structure between all five concrete cryostat

surfaces. The top plate of each cryostat detector shall serve as the detector's grounding point and be connected uniformly to the detector's Ufer ground structure.

2.3 The common wall between each of the cryostats and the middle utility section needs to be separated into two independent structures with the separation being defined as above.

2.4 For each of the grounding structure's Ufer ground construction, the rebar elements used must be bare steel. The steel cannot be coated or painted. If a corrosion-resistant coating is used, it must be electrically conductive (such as galvanized, etc.)

2.5 For the cavern, as much of the support metal and metal structures as possible, including the shot-crete metal mesh, shall be interconnected so as to minimize any ground potentials throughout the cavern.

2.6 To maximize the low-impedance and uniformity within a grounding structure, the DC resistance between any of the interconnected metal components within a particular grounding structure shall be less than 1 ohm.

3.0 Cryostat Concrete Rebar Placement:

Using the document, LBNE Interface Agreement Form – 16 (LBNE DocDB# 6443-v3), as a baseline for the placement and gauge of the rebar, the spacing, both vertical and horizontal, shall be as determined by structural requirements.

3.1 The floor-to-wall and the wall-to-wall rebar shall be as depicted in the document, Docdb 6443-v3, with the bending and blending of the lattice structures. Interconnections at these junctions shall be no more than 36 inches apart for each lattice plane

3.2 As shown, each wall and floor contains two rebar lattice planes. These planes need to have the rebar placed in depth so as to form a three-dimensional rebar lattice. The placement of the "depth" dimensional rebar shall be spaced no more than 36 inches apart in any one direction.

4.0 Rebar Interconnections:

4.1 At each rebar intersection or crossing, the interconnection must be steel-to-steel contact. Any corrosion must be removed in order to permit a solid metal-to-metal electrical connection.

4.2 At each crossing/intersection of rebar, the metal contact must be secured using 12 or 10 AWG steel (not copper) wire, double cross-wrapped and twist-tied by mechanical means to maintain uniformity of contact throughout the lattice structure.

5.0 External Protrusions for Electrical Connections:

In order to make electrical contact with the rebar lattice, the rebar must be bonded to the top plate and truss structure. This can be done using the following methods: 1) the rebar sections are brought out of the top surface of the walls for external connections, 2) anchor bolts and the tension rods are connected to the rebar by welding, 3) copper wire, 4/0 AWG, is cad-welded to the rebar lattice structure and brought out of the concrete for electrical connection to the top plate structure. The method used will be determined by the construction methods chosen to join the top plate and truss to the tank walls. Regardless of which connection method is used, the following applies:

5.1 The interconnections between the walls' Ufer rebar and the top plate shall be along the entire perimeter with spacing between the individual bonding points no greater than 4 feet.

5.2 The external protrusions used for electrical contact must be welded to the rebar lattice elements. Twist-tie using the steel wire is not to be used for these particular connections.

6.0 Cavern Grounding Structure:

Since the cavern will be cored out of solid rock, there will be no integrated metal "building" support structure as normally would occur for a building constructed above ground. In addition, some metal supports for piping, water, cable trays, air ducts, etc. will be supported by anchors attached to rock. Therefore, there is the probability that various metal structures within the cavern will not be electrically connected together. To maximize the low-impedance path (back to the source) for AC ground currents and to minimize the probability of these ground currents being coupled onto the cryostats' grounding structures, these cavern metal infrastructure components need to be electrically interconnected as much as possible.

6.1 All cable trays, used for cavern infrastructure utilities, need to be electrically continuous and bonded to the cavern's grounding structure.

6.2 The metal mesh panels, used in the cavern's shot-crete construction, needs to be interconnected so as to form an electrically uniform mesh. Interconnection points shall not be more than 4 feet apart.

6.3 The cavern's grounded metal components shall not come into electrical contact with the individual cryostat's Ufer ground construction or with the top plate construction.

6.4 Rock anchor rods, if used as earth grounding electrodes, shall be bonded to the caverns ground electrode copper conductor(s) of 4/0 AWG or larger.

6.5 Supplemental grounding connections, as may be needed to minimize ground potential differences, shall be implemented as determined by ground resistance and potential

testing. These grounding connections shall use, where needed, bare copper ground conductor cable of 4/0 AWG or larger.

6.6 Where electrical raceways are to be used, these raceways shall be:
1. Raceway material shall be of tin-plated aluminum. If a rectangular raceway with a lid or cover is used, the cover shall implement the capability to maintain conductivity with the raceway channel.
2. Cables or conductors used for equipment associated with a particular grounded structure (Detector-1, Detector-2, etc.) shall be in separate raceways.
3. Electrical distribution conductors or cables shall not be installed in the same raceway as signal, telecomm cables, or other systems as per NEC Article 300.8.

7.0 Substation Vault Grounding:

The current proposal dictates that the substation vault, housing the 12.47 kV transformers and associated switchgear, will be to the east side of the cavern and thus will not have appreciable distance from the detectors' construction. Therefore, the grounding structure for this vault will entail the following specific requirements.

7.1 This vault will be designated as the primary earth grounding point. Thus, all grounding electrodes must be connected to the grounding conductor at this point.

7.2 All concrete walls, floor and ceiling of the vault will employ a rebar Ufer ground system and will contain a metal ground mesh (similar to that used for surface substations' buried ground grid) constructed of copper, within these concrete surfaces. This ground mesh shall be electrically connected to the Ufer ground.

7.3 Ventilation duct openings shall not disrupt the shielding integrity of the metal mesh. Any metal duct work must be electrically connected to the ground mesh. The duct openings shall have an EMI (Electro-Magnetic Interference) grid cover installed.

8.0 Cavern Utility Midsection Grounding Structure:

The cavern's utility midsection, presently proposed to house various cryogenic dewars and equipment, shall be integrated as much as possible with the cavern's grounding structure.

8.1 All metal supports, equipment grounding points, platforms, rock anchors shall be electrically interconnected and connected at multiple points to the cavern's grounded metal components.

8.2 The end walls of the midsection shall implement an Ufer ground concrete construction and be electrically connected to the cavern's grounding structure. This Ufer ground structure shall not be electrically connected to the cryostats' Ufer ground construction.

8.3 An electrical insulating barrier, if the concrete-to-concrete isolation cannot be maintained as described in section 2.1, shall be placed between the concrete wall sections of the midsection and the cryostats' concrete wall sections.

9.0 Cryostat Top Plate Grounding Connections:

The metal top plate for each of the cryostats serves as the grounding point of reference for their respective cryostat. Therefore, it is very important that the metal interconnections be as uniform as possible and that any ground potentials along this top plate, and its components, be minimized.

9.1 All components of the top plate, unless specifically designated, shall be electrically isolated from the cavern's ground structure.

9.2 All cryogenic piping, crossing over from the cavern ground structure to the detector ground structure, shall implement dielectric breaks so as not to make metal-to-metal electrical contact between the ground structures through the piping.

9.3 The top plate shall employ a uniform copper sheeting beneath the steel plate's construction. This copper sheeting shall be electrically bonded to the steel plate at multiple points where the distance between the bonding points does not exceed 4 feet.

9.4 Top plate support trusses shall be electrically bonded to the top plate metal assembly. These trusses shall not come in contact with metal associated with the cavern's grounding structure.

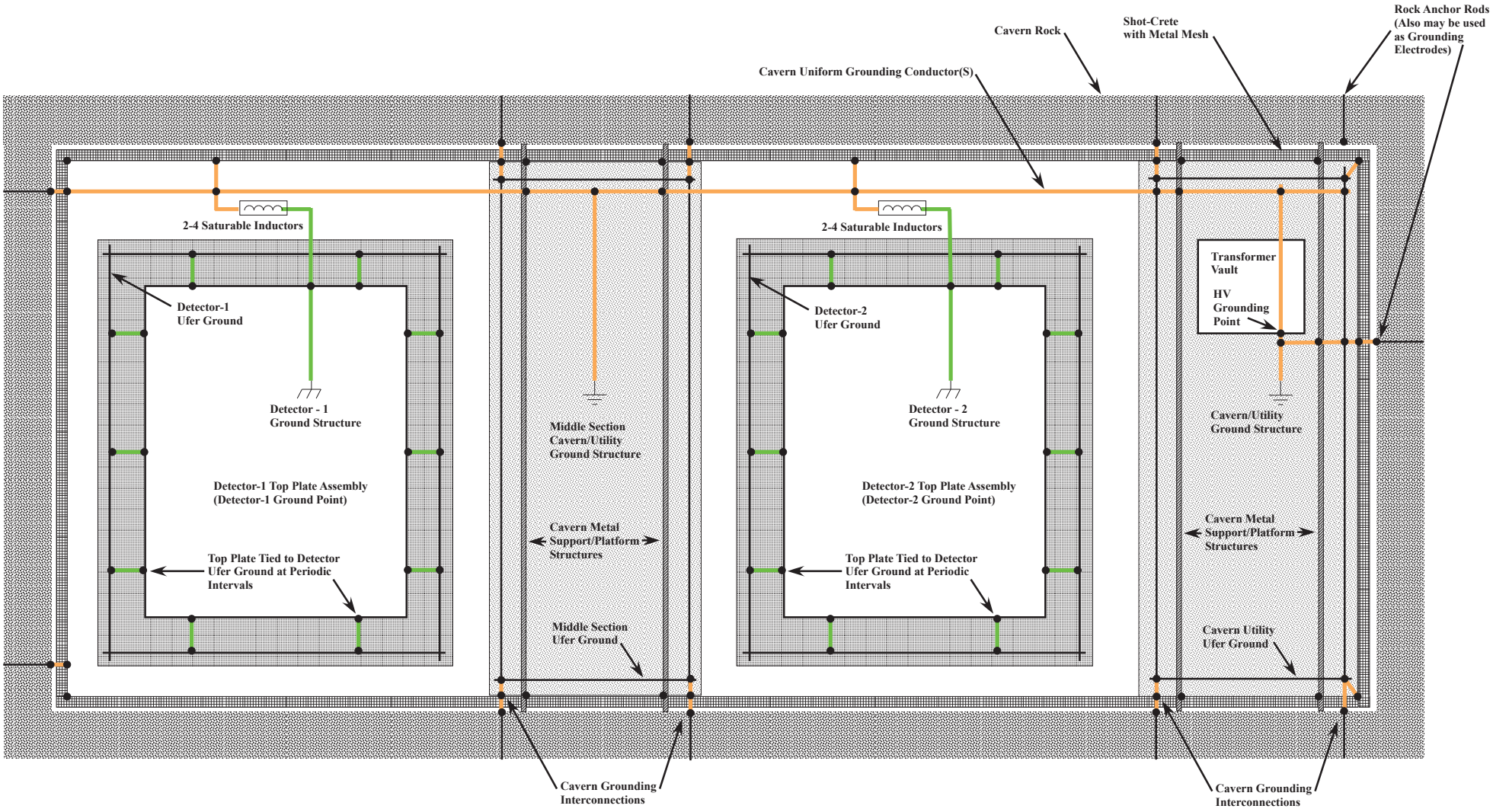

Title: LBNE Far Detector Conceptual Grounding Diagram (Multi-Detector Cavern)				
Project: LBNE	Drawn: Steve Chappa	Date: 04-01-2014	Sheet: 1 of 2	Rev: C

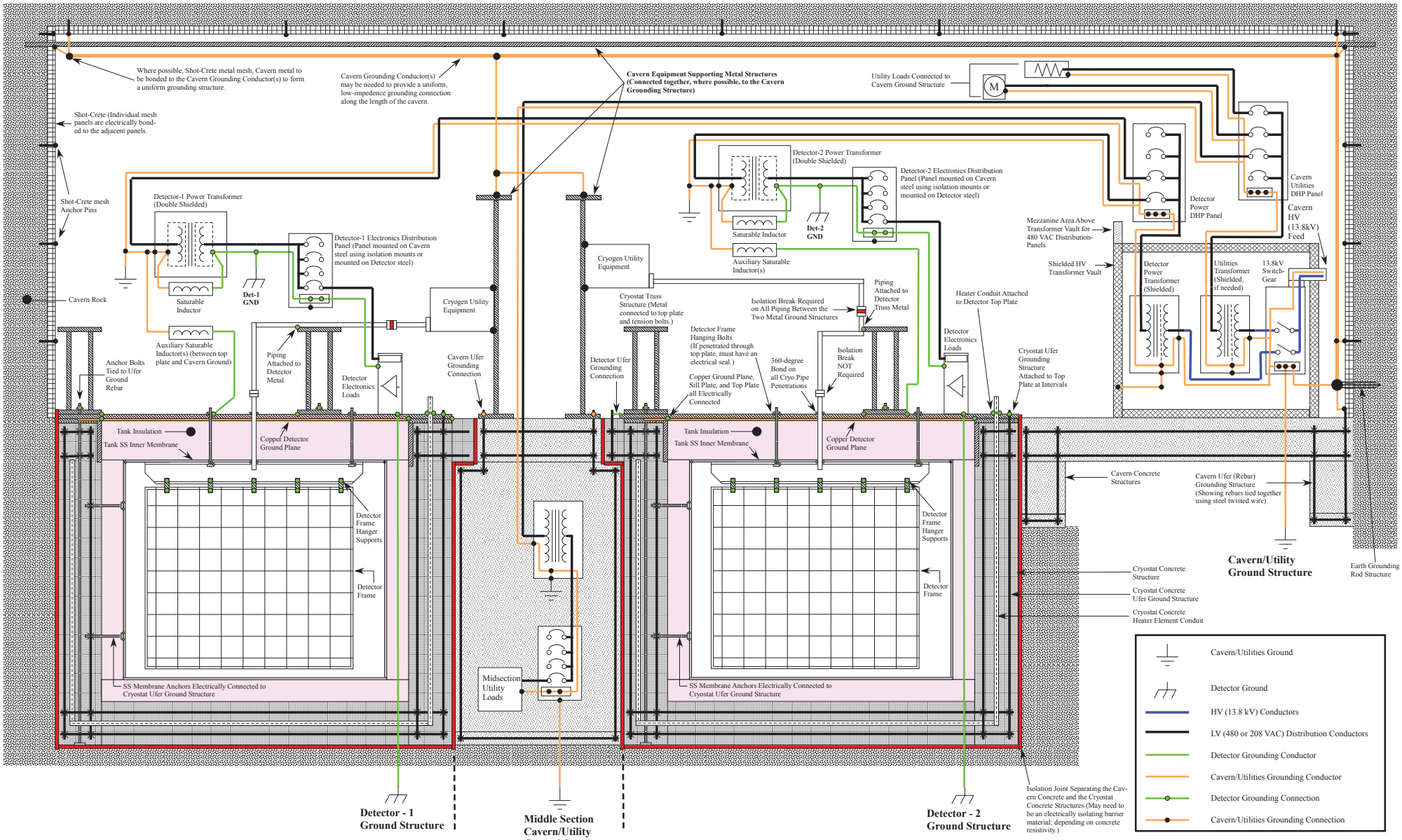

Title: LBNE Far Detector Structural Grounding Diagram (Multi-Detector Cavern)				
Project: LBNE	Drawn: Steve Chappa	Date: 04-01-2014	Sheet: 2 of 2	Rev: C

Steven J Dixon

From: Peter J Wilson
Sent: Monday, April 06, 2015 1:31 PM
To: Steven J Dixon
Cc: Michael G Geynisman; Barry L Norris
Subject: Fwd: SFDB - Readiness Review Action Items

Steve,
This is what Michael sent on this.

Peter

Begin forwarded message:

From: Michael G Geynisman <hope@fnal.gov>
Subject: SFDB - Readiness Review Action Items
Date: March 24, 2015 at 8:33:16 AM CDT
To: Peter J Wilson <pjw@fnal.gov>
Cc: Barry L Norris <norris@fnal.gov>

Peter,

Here is my submission for action items 3 and 5 :

Item 3: Estimate of heat load for filter regeneration in case Cu filters are needed. Frequency of operation, duration of operation.

a) Assume 40 times total for the life of the detector. Frequency varies, as after initial fill it could be up to once a week, but only once in few months during stable operations.
b) The heat load to the building will be minimal in both duration (24 hrs.) and level (less than 1 kW).
c) No special ES&H requirements for regeneration heating of the filter media, except insulation of hot piping surfaces and posting "hot surface".

Item 5: Initiate preliminary review of ODH ventilation plan with Cryo safety panel.

a) Submitted to the safety panel a document titled " Preliminary Discussion of ODH setup for Short Base New Detector and Far Detector building" and posted as SBN-doc-377, version 1.

Thanks.

Michael Geynisman
Fermilab/Neutrino Division/Argon Cryogenics
PO Box 500, MS219, Batavia, IL 60510
Ph. (630)-8402191
Email: hope@fnal.gov
==========

There is Always a Ray of Hope on the Horizon

Peter Wilson - Short Baseline Neutrino Program
Neutrino Division
Fermi National Accelerator Laboratory
pjw@fnal.gov
630-840-2156

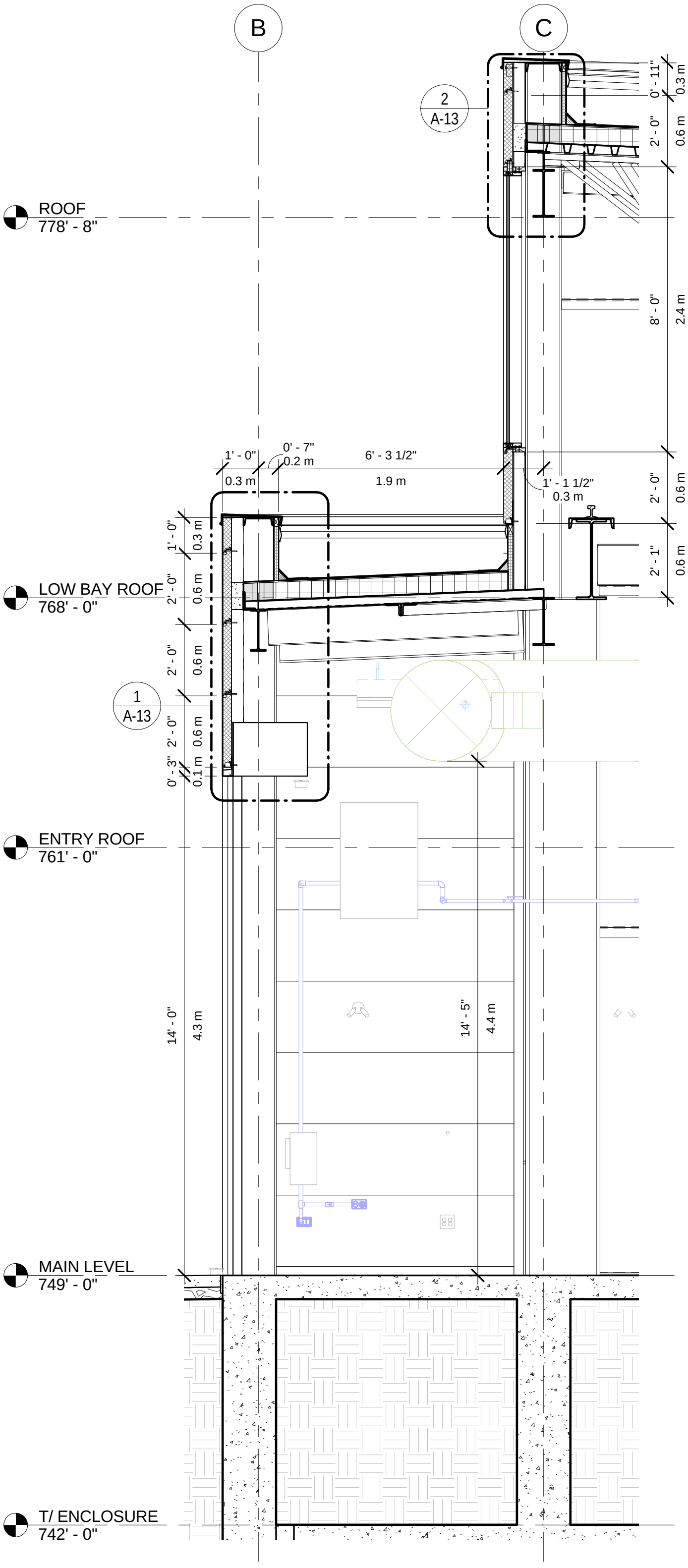
B
C
2
A-13
1
A-13
ROOF
778' - 8"
LOW BAY ROOF
768' - 0"
ENTRY ROOF
761' - 0"
MAIN LEVEL
749' - 0"
T/ ENCLOSURE
742' - 0"
0' - 11"
0.3 m
2' - 0"
0.6 m
8' - 0"
2.4 m
2' - 0"
0.6 m
2' - 1"
0.6 m
1' - 0"
0.3 m
2' - 0"
0.6 m
2' - 0"
0.6 m
2' - 0"
0.6 m
0' - 3"
0.1 m
14' - 0"
4.3 m
14' - 5"
4.4 m
1' - 0"
0.3 m
0' - 7"
0.2 m
6' - 3 1/2"
1.9 m
1' - 1 1/2"
0.3 m