UK Plans for CPA

Peter Sutcliffe
Liverpool University

US-UK LAr1-ND meeting
Tuesday 17th June 2014

CPA Construction

- CPA Made up of a Stainless steel frame and 16 stainless steel wire mesh smaller frames.
- High Voltage feed through at the top.

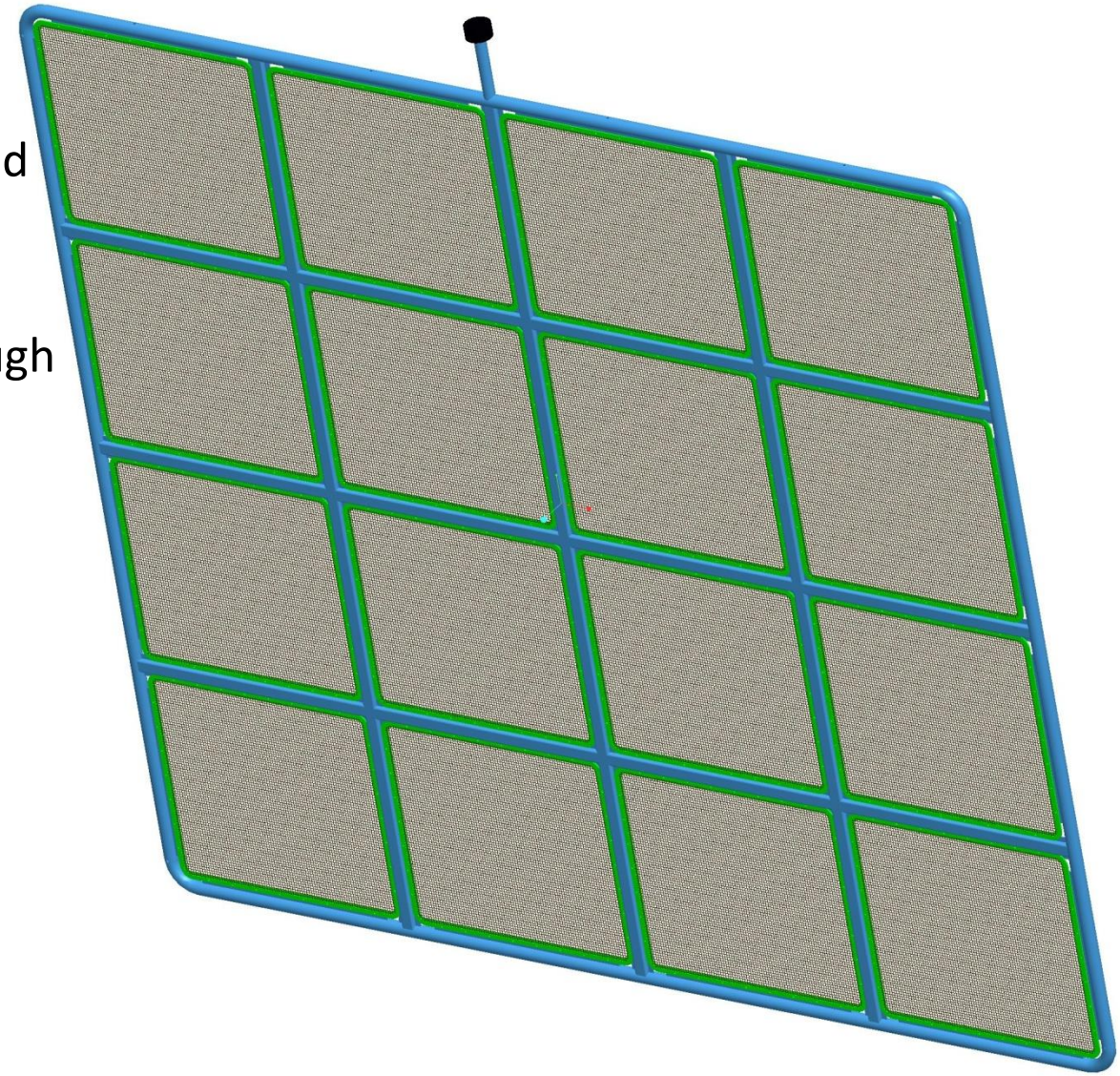

Frame Construction

- Frame is an all welded assembly manufactured from a tubular steel rim and square section lattice.
- Frame will need to be ‘jigged’ to reduce distortion
- The frame will be hollow to allow liquid Argon to pass through.
- Holes around the tube and section to allow Argon to fill without air holes.
- Tube and SHS sizes TBD after some FE analysis

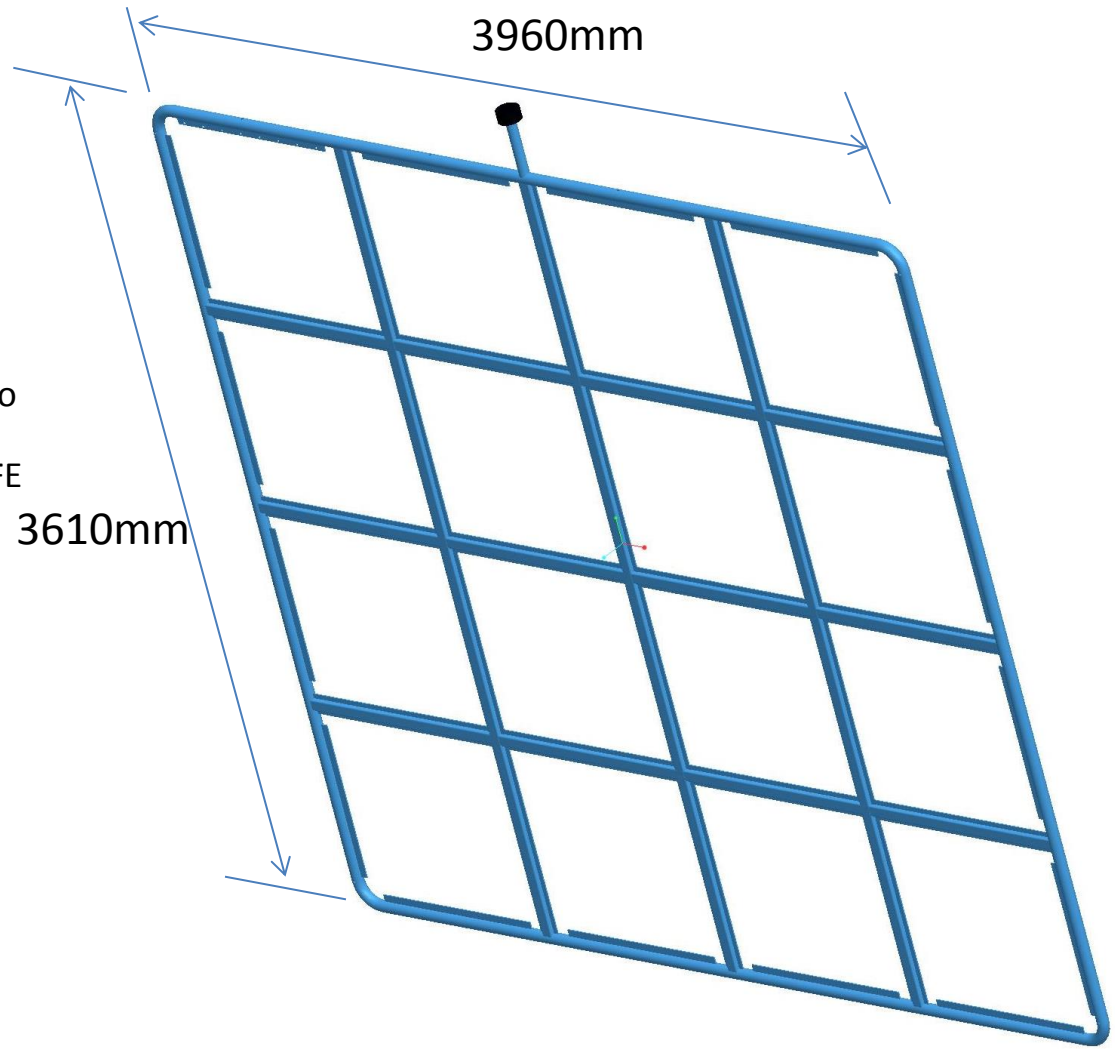

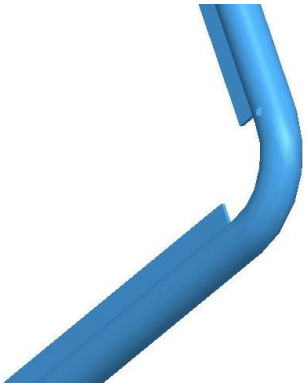

Mesh and Frame

Frame 931 wide x 843 height x 5mm thick.
Rim width 28mm

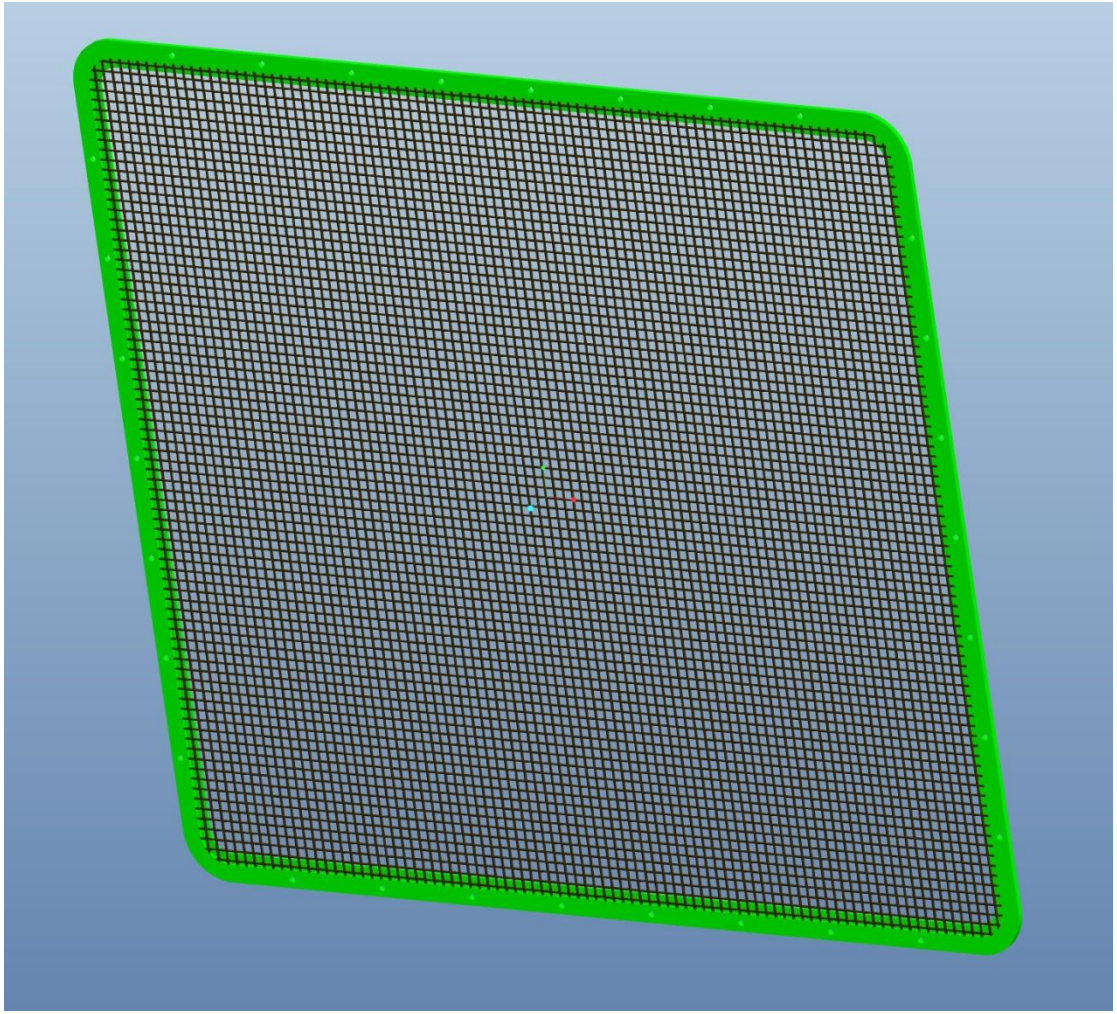

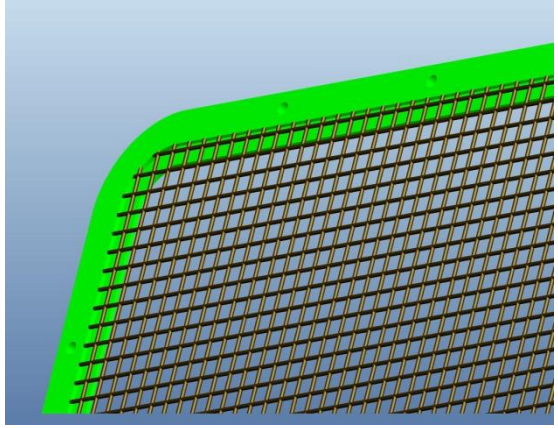

Mesh Size around 2mm
Wire Size 1mm
Seam welded into frame
Mesh supplied and welded by Bopp
Frame can be supplied to Bopp and manufactured in the UK.

Cost of mesh and welding into free issue frame (20 off including 4 spares)

931mm x 843mm free issue frame
Meshed Stainless Steel 304/316 2.000mm aperture x 1.000mm
Resistance / Spot welded only

20 off @ £138.50 each
Total Cost: £3276 inc VAT

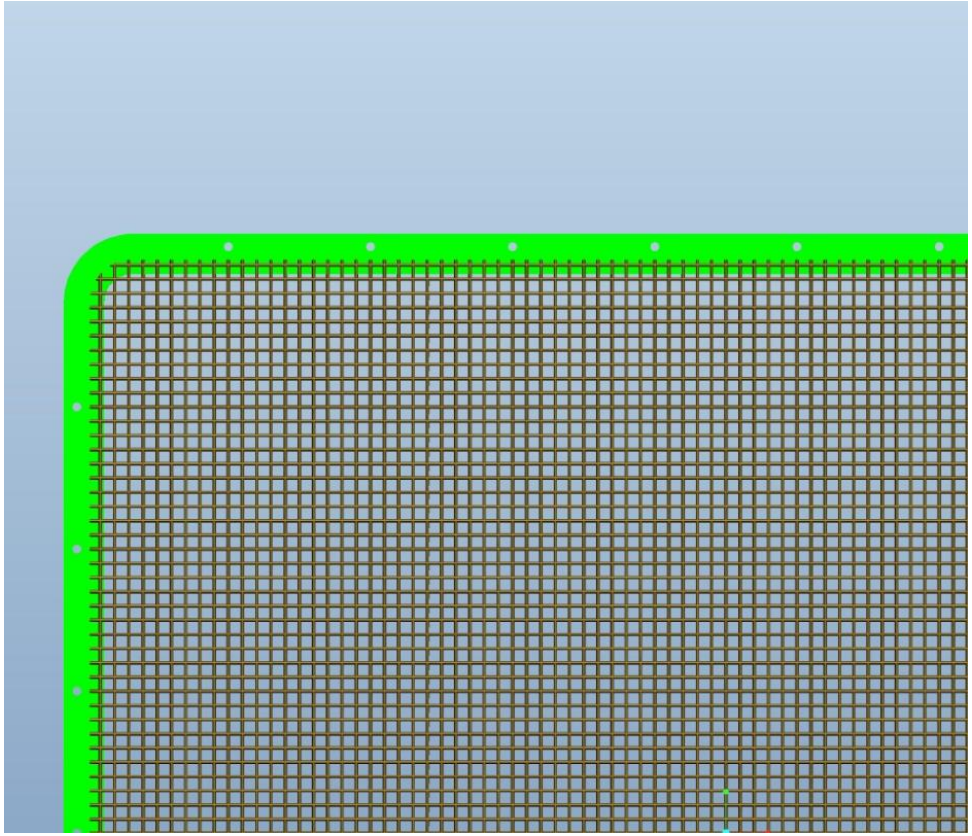

Mesh into Frame Assembly

- Mesh is fitted into the frame using st st cap head screws.
- Holes in the blue frame to be drilled after welding.
- Possibility of using stainless steel sheet instead of mesh.

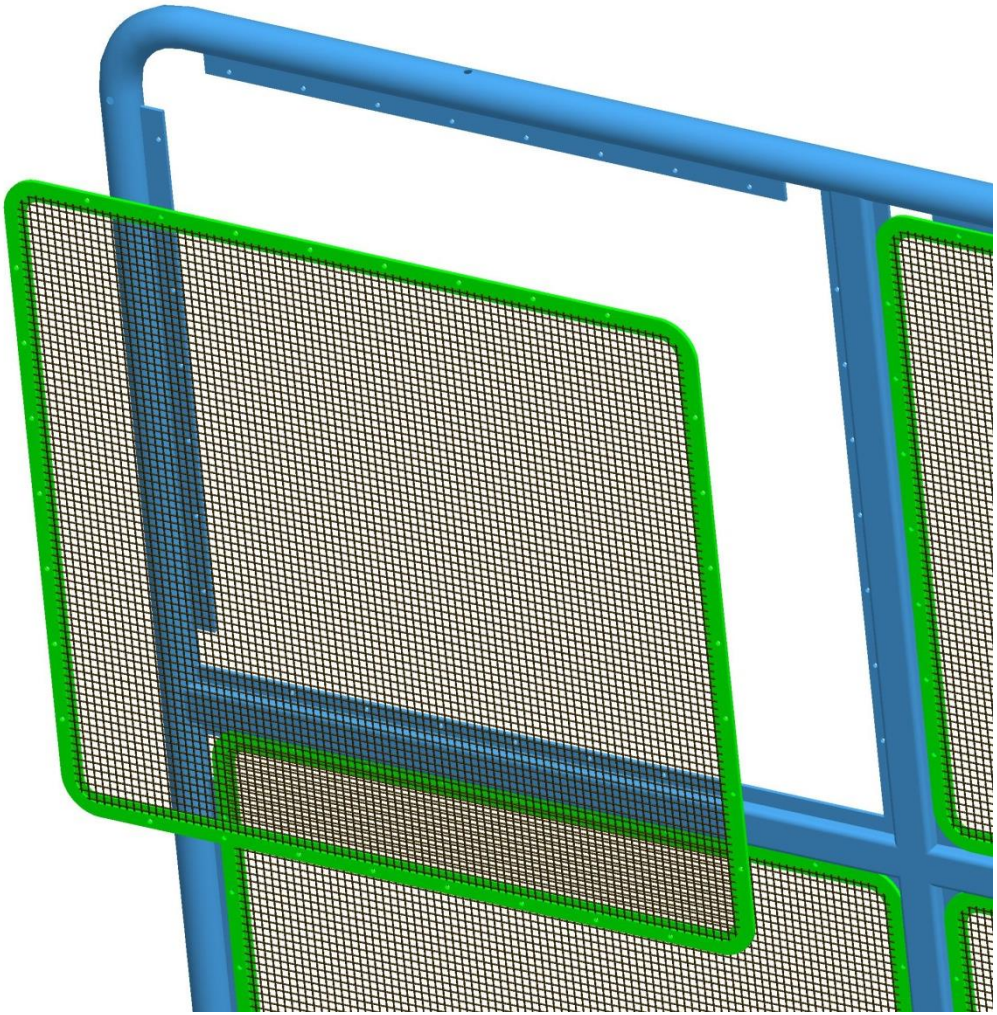

High Voltage Feedthroughs

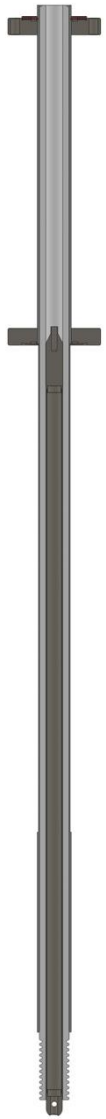

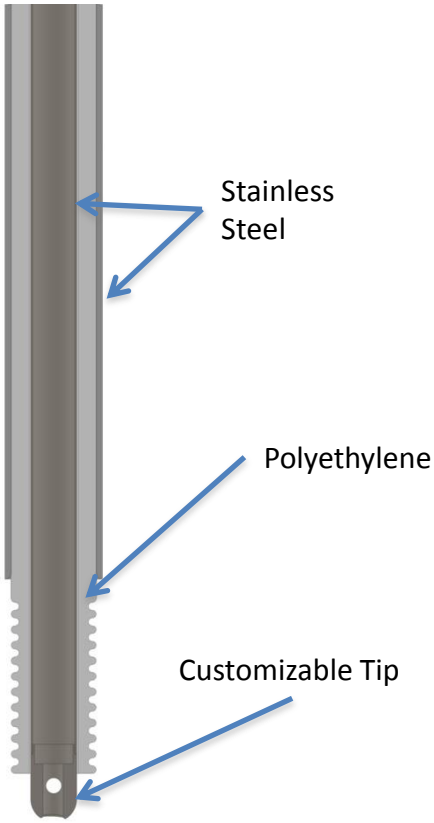

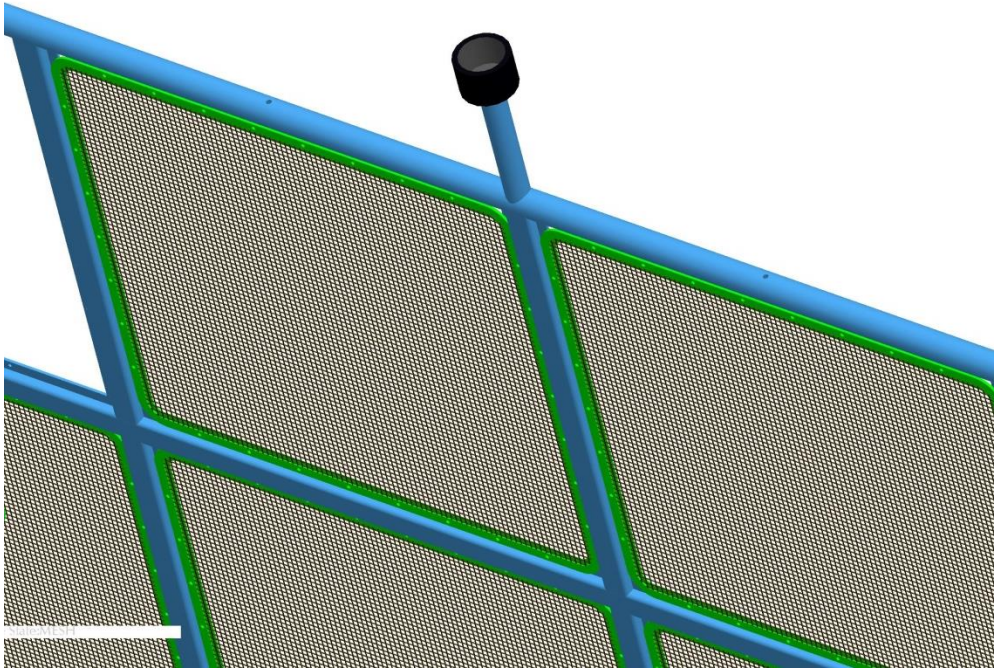

- Feedthrough at the top of the frame
- Feedthrough socket to fit final design (left)

Artin Teymourian

Manufacture, Costings and Time Schedule

- Preliminary Design
  - Frame fabricated at specialist company.
  - Bopp will provide mesh and seam weld into the frame
  - Supports into Structure TBD
  - Feedthrough to match final design
  - FE Analysis needed for deflection and distortion due to cooling
  - Liq N testing to be done in the UK
- Costings
  - Estimated cost of structure £25k
  - Other consumables £10k
  - Transport £10
- Time Schedule
  - Design 03/15 to 07/16
  - Manufacture and Testing 09/16 to 12/16
  - Delivery to FNAL 04/17