SBN FDB SITE WORK

PROJECT 6-7-94B

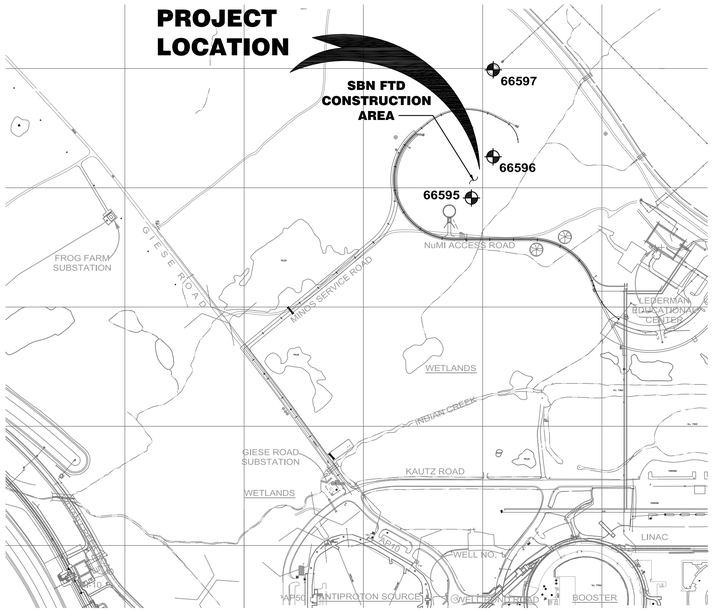

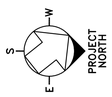

LOCATION PLAN

SCALE 1"=300'-0"

FERMILAB HORIZONTAL & VERTICAL CONTROL POINTS

NOTE: ALL CONTROL POINTS ARE ON "LOCAL" FERMILAB DATUM

THE FOLLOWING CONTROL POINTS ARE PROVIDED BY FERMILAB ALIGNMENT & METROLOGY GROUP AND REQUIRE A SPECIAL THREADED ADAPTOR, AVAILABLE FROM THE ALIGNMENT & METROLOGY GROUP.

POINT NO.	NORTHING	EASTING	ELEV.	DESCRIPTION
66595	98954.1041	98040.2046	749.1087	STEEL PLATE SET IN THE TOP OF A CONCRETE MONUMENT
66596	99045.0242	97867.4731	750.2063	STEEL PLATE SET IN THE TOP OF A CONCRETE MONUMENT
66597	99044.3738	97505.4852	751.6424	STEEL PLATE SET IN THE TOP OF A CONCRETE MONUMENT

LEGEND

— - — — - — SITE BOUNDRY LINES

o o o o o o o ON SITE CONST. ROUTES

—****** —

HOURS

WILSON ST.....6:30 AM TO 3:30 PM (M-F)
PINE ST.....24 HOURS/7 DAYS A WEEK
BATAVIA RD.....6:30 AM TO 11:00 PM (7 DAYS A WEEK)
EOLA RD.
KAUTZ RD.

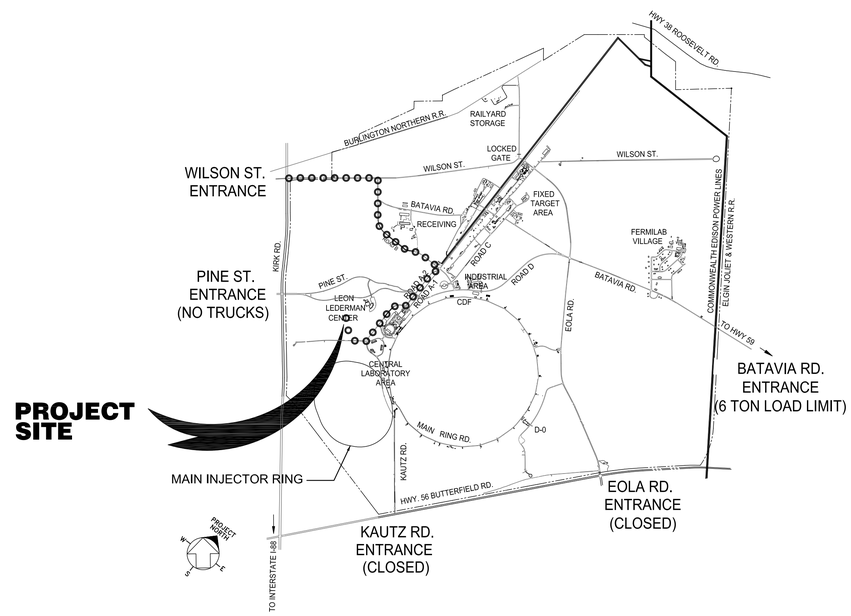

VICINITY PLAN

SCALE 1"=3000'-0"

DRAWING LIST

GENERAL

G-1 TITLE SHEET

CIVIL

C-1 GENERAL CIVIL NOTES AND LEGEND
C-2 DEMOLITION PLAN AND SPECIAL SEQUENCING
C-3 SITE PLAN
C-4 UTILITY PLAN
C-5 GRADING / DRAINAGE
C-6 STAGING / EXCAVATION / STORMWATER POLLUTION PREVENTION PLAN
C-7 STORMWATER POLLUTION PREVENTION PLAN - DETAILS
C-8 MISC. DETAILS - I
C-9 MISC. DETAILS - II
C-10 MISC. DETAILS - III
C-11 TANK FOUNDATION DETAILS

ELECTRICAL

E-1 ELECTRICAL COVER SHEET
E-2 ELECTRICAL SITE PLAN
E-3 ONE-LINE DIAGRAM
E-4 ELECTRICAL DETAILS
E-5 ELECTRICAL DETAILS

© Copyright CMT, Inc.

CMT
CRAWFORD, MURPHY & TILLY, INC.
CONSULTING ENGINEERS
License No. 184-000613

KJWW ENGINEERING CONSULTANTS
Experience you can build on.™
1100 WARRENVILLE ROAD, SUITE 400W
NAPERVILLE, IL 60563
630.527.2320 FAX: 630.527.2321
www.kjww.com
PROJECT #6-7-94B

KJWW ENGINEERING RESERVES PROPRIETARY RIGHTS, INCLUDING COPYRIGHTS, TO THIS DRAWING AND THE DATA SHOWN THEREON. SAID DRAWING AND/OR DATA ARE THE EXCLUSIVE PROPERTY OF KJWW ENGINEERING AND SHALL NOT BE USED OR REPRODUCED FOR ANY OTHER PROJECT WITHOUT THE EXPRESS WRITTEN APPROVAL AND PARTICIPATION OF KJWW ENGINEERING. © 2015 KJWW, P.C.

REFERENCE SCALE IN INCHES
0 1 2 3

REV.	DATE	DESCRIPTIONS
	3/30/15	ISSUED FOR PROPOSALS

REVISIONS

CMT
CRAWFORD, MURPHY & TILLY, INC.
CONSULTING ENGINEERS
550 NORTH COMMONS DRIVE
SUITE 116
AURORA, ILLINOIS
60504
(630) 820-1022
(630) 820-0350 FAX

	NAME	DATE
DESIGNED	A.KUCHIMANCHI	3-30-2015
DRAWN	A.KUCHIMANCHI	3-30-2015
CHECKED	T.O'GRADY	3-30-2015
APPROVED		
SUBMITTED		

SCALE:
1" = 300'-0" 300 0 300 600 SCALE FEET
1" = 3000'-0" 3000 0 3000 6000 SCALE FEET

FERMI NATIONAL ACCELERATOR LABORATORY
UNITED STATES DEPARTMENT OF ENERGY

SBN FDB SITE WORK
TITLE SHEET

DRAWING NO. 6-7-94B G-1 REV.

30 MARCH 2015

Mar 30, 2015 - 9:08am J:\HolabirdRoot\14201-08_FermiDctrSitewrk\DrawSheets\Far Detector\G1-6-7-94B.dwg

GENERAL CIVIL NOTES:

1. THE EXISTING UTILITY LOCATIONS SHOWN ON THESE PLANS MAY NOT BE COMPLETE OR NECESSARILY ACCURATE. THE SUBCONTRACTOR IS RESPONSIBLE FOR ALL UTILITY COORDINATION SHOWN OR NOT. THE SUPPORT, PROTECTION AND RESTORATION OF ALL UTILITIES AND APPURTENANCES SHALL BE THE RESPONSIBILITY OF THE SUBCONTRACTOR.
2. REFER TO ELECTRICAL SHEETS FOR DETAILS ON ELECTRICAL AND COMMUNICATION DUCTS AND ELECTRICAL AND HVAC EQUIPMENT PADS.
3. SAW CUTS TO BE COMPLETED IN ACCORDANCE WITH IDOT SPECIFICATION 442.
4. SUBCONTRACTOR TO MAINTAIN POSITIVE DRAINAGE AT ALL TIMES.
5. PAVEMENT MARKINGS TO BE COMPLETED IN ACCORDANCE WITH IDOT SPECIFICATION 780.
6. TREE REMOVAL TO BE KEPT TO A MINIMUM AND COMPLETED IN ACCORDANCE WITH IDOT SPECIFICATION 201.

LEGEND

•	PROPOSED ELEVATION
CL	CENTERLINE
EP	EDGE OF PAVEMENT
T/F	TOP OF FLOOR
LF	LINEAL FEET
	DRAINAGE DIRECTION
	MITIGATED WETLANDS
	UNDISTURBED WETLANDS
	NEW ACCESS ROAD
	PAVEMENT REMOVAL AND REPLACEMENT
	TREE REMOVAL (6" TO 15" DIAMETER)
	TEMPORARY ACCESS
	EROSION CONTROL BLANKET

P	NEW POWER LINE
COMM	NEW COMMUNICATIONS LINE
ICW	NEW INDUSTRIAL COOLING WATER LINE
DWS	NEW DOMESTIC WATER SUPPLY LINE
GAS	NEW GAS LINE
S	NEW SILT FENCE
SAN	NEW SANITARY SEWER
	EXISTING POWER LINE
COMM	EXISTING COMMUNICATIONS LINE
ICW	EXISTING INDUSTRIAL COOLING WATER LINE
DWS	EXISTING DOMESTIC WATER SUPPLY LINE
GAS	EXISTING GAS LINE
FEED	EXISTING FEED LINE

REV.	DATE	DESCRIPTIONS
	3/30/15	ISSUED FOR PROPOSALS

REVISIONS

CMT
CRAWFORD, MURPHY & TILLY, INC.
CONSULTING ENGINEERS
550 NORTH COMMONS DRIVE
SUITE 116
AURORA, ILLINOIS
60504
(630) 820-1022
(630) 820-0350 FAX

	NAME	DATE
DESIGNED	A. KUCHIMANCHI	3-30-2015
DRAWN	A. KUCHIMANCHI	3-30-2015
CHECKED	T. O'GRADY	3-30-2015
APPROVED		
SUBMITTED		

SCALE: N.T.S.

FERMI NATIONAL ACCELERATOR LABORATORY
UNITED STATES DEPARTMENT OF ENERGY

SBN FDB SITE WORK
GENERAL CIVIL NOTES AND LEGEND

DRAWING NO. 6-7-94B C-1 REV.

30 MARCH 2015

Mar 26, 2015 - 9:47am J:\HolabirdRoot\14201-08_FermiDctrSitewrk\Draw\Sheets\Far Detector\C1-6-7-94B.dwg

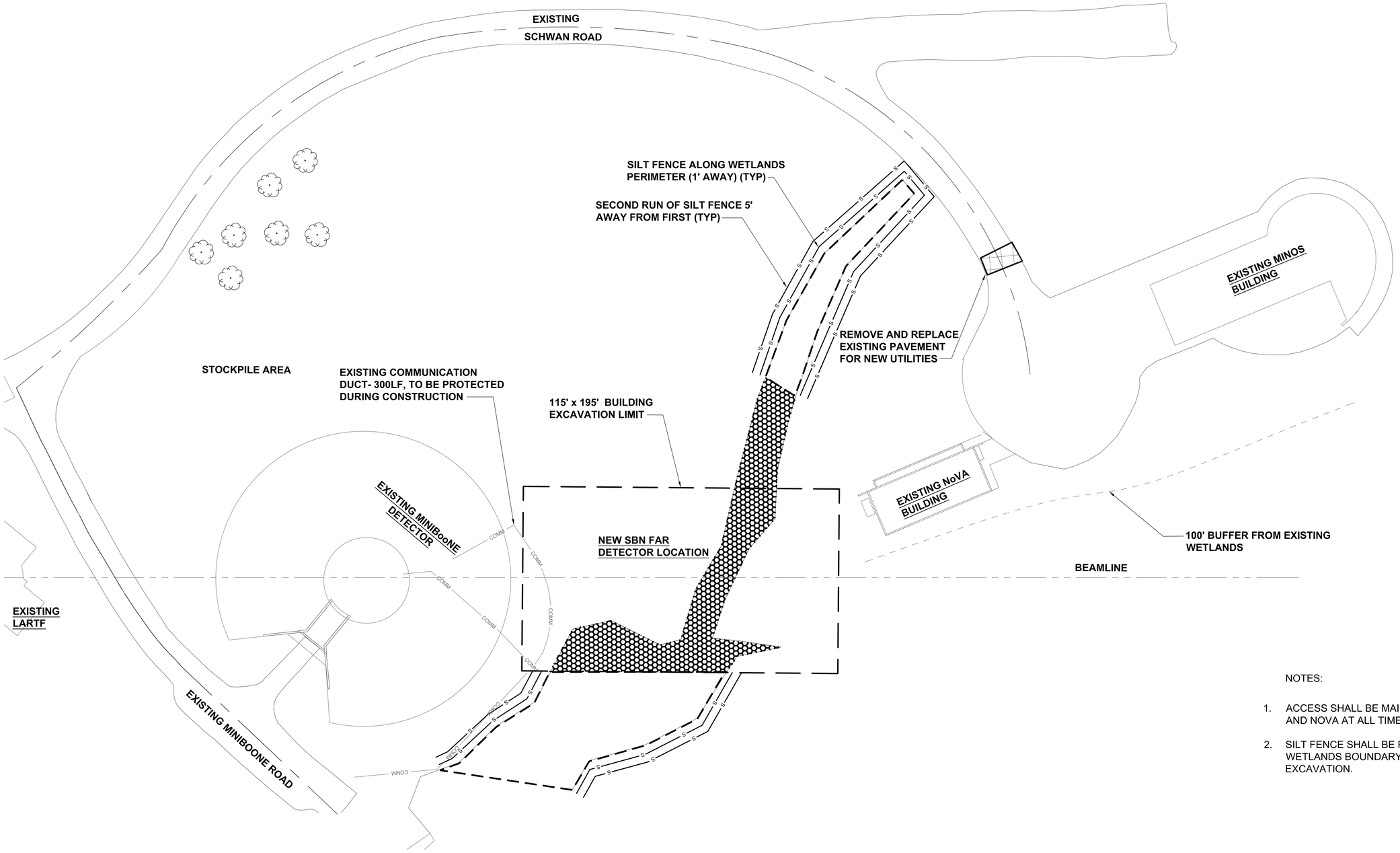

NOTES:

1. ACCESS SHALL BE MAINTAINED TO MINOS AND NOVA AT ALL TIMES.
2. SILT FENCE SHALL BE PROVIDED ALONG THE WETLANDS BOUNDARY PRIOR TO EXCAVATION.

REV.	DATE	DESCRIPTIONS
	3/30/15	ISSUED FOR PROPOSALS

REVISIONS

CMT
CRAWFORD, MURPHY & TILLY, INC.
CONSULTING ENGINEERS
550 NORTH COMMONS DRIVE
SUITE 116
AURORA, ILLINOIS
60504
(630) 820-1022
(630) 820-0350 FAX

	NAME	DATE
DESIGNED	A. KUCHIMANCHI	3-30-2015
DRAWN	A. KUCHIMANCHI	3-30-2015
CHECKED	T. O'GRADY	3-30-2015
APPROVED		
SUBMITTED		

S W E PROJECT NORTH

SCALE:

1" = 30'-0" 30' 0 30' 60' SCALE FEET

FERMI NATIONAL ACCELERATOR LABORATORY
UNITED STATES DEPARTMENT OF ENERGY

SBN FDB SITE WORK
DEMOLITION PLAN AND SPECIAL SEQUENCING

DRAWING NO. 6-7-94B C-2 REV.

30 MARCH 2015

Mar 30, 2015 - 8:44am J:\HolabirdRoot\14201-08_FermiDcrSitewrk\DrawSheets\Far Detector\C2-6-7-94B.dwg

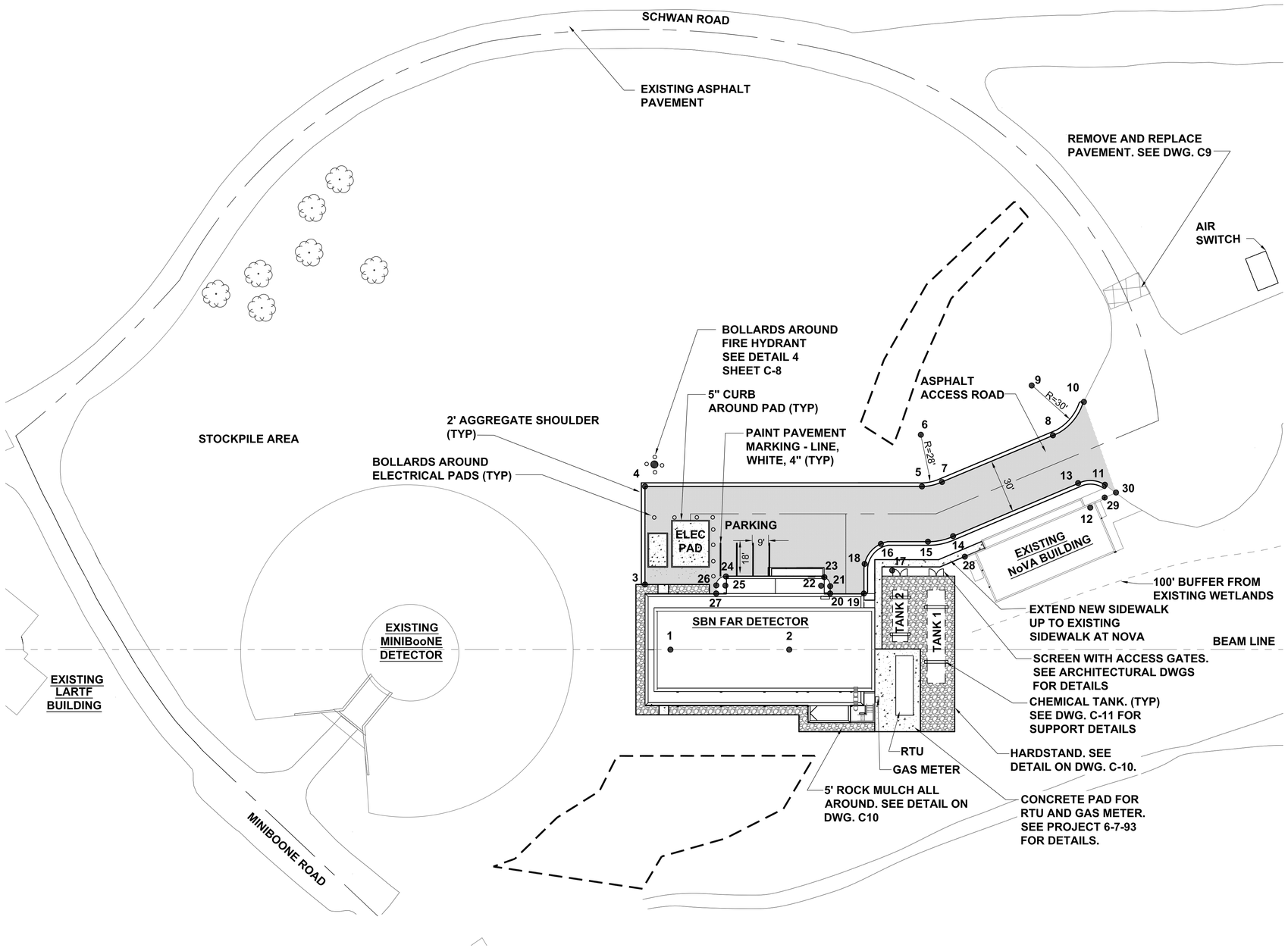

HORIZONTAL CONTROL TABLE

POINT NO.	NORTHING	EASTING	DESCRIPTION
1*	98971.287	98006.793	BEAM LINE
2*	99022.057	97965.107	BEAM LINE
3	98937.521	97987.858	EOP
4	98903.102	97945.937	EOP
5	99021.475	97848.725	EOP, PC
6	99002.857	97827.010	RADIUS POINT
7	99028.486	97839.772	EOP, PT
8	99059.525	97780.895	EOP, PC
9	99032.930	97767.030	RADIUS POINT
10	99061.005	97755.720	EOP, PT
11	99099.071	97783.801	EOP, PC
12	99100.833	97798.704	RADIUS POINT (R=15'-0")
13	99087.057	97792.495	EOP, PT
14	99052.258	97859.061	EOP, PC
15	99043.442	97870.245	EOP, PT
16	99024.113	97887.693	EOP, PC
17	99038.245	97895.096	RADIUS POINT (R=15'-0")
18	99024.195	97901.975	EOP, PT
19	99034.261	97914.901	EOP
20	99019.815	97926.723	EOP
21	99017.287	97923.585	EOP, PC
22	99013.265	97926.576	RADIUS POINT (R=5'-0")
23	99011.634	97921.771	EOP, PT
24	98969.308	97956.027	EOP, PC
25	98972.273	97960.103	RADIUS POINT (R=5'-0")
26	98968.313	97963.223	EOP, PT
27	98971.125	97966.711	EOP
28	99064.449	97863.725	EOP (NOVA)
29	99103.489	97789.348	EOP (NOVA)
30	99106.558	97783.232	EOP

NOTES:

1. " * " INDICATES BEAM COORDINATES ON THE EDGE OF THE DETECTOR.
2. MITIGATED WETLANDS NOT SHOWN FOR CLARITY. SEE DWG. C2 FOR LIMITS.

REV.	DATE	DESCRIPTIONS
	3/30/15	ISSUED FOR PROPOSALS

REVISIONS

CMT

CRAWFORD, MURPHY & TILLY, INC.
CONSULTING ENGINEERS

550 NORTH COMMONS DRIVE
SUITE 116
AURORA, ILLINOIS
60504
(630) 820-1022
(630) 820-0350 FAX

	NAME	DATE
DESIGNED	A. KUCHIMANCHI	3-30-2015
DRAWN	A. KUCHIMANCHI	3-30-2015
CHECKED	T. O'GRADY	3-30-2015
APPROVED		
SUBMITTED		

S W E
PROJECT NORTH

SCALE:
1" = 30'-0" 30' 0 30' 60' SCALE FEET

FERMI NATIONAL ACCELERATOR LABORATORY
UNITED STATES DEPARTMENT OF ENERGY

SBN FDB SITE WORK
SITE PLAN

DRAWING NO. **6-7-94B** **C-3** REV.

30 MARCH 2015

Mar 30, 2015 - 8:53am J:\Holabird\Root\14201-08_FermiDctrSitewrk\Draw\Sheets\Far Detector\C3-6-7-94B.dwg

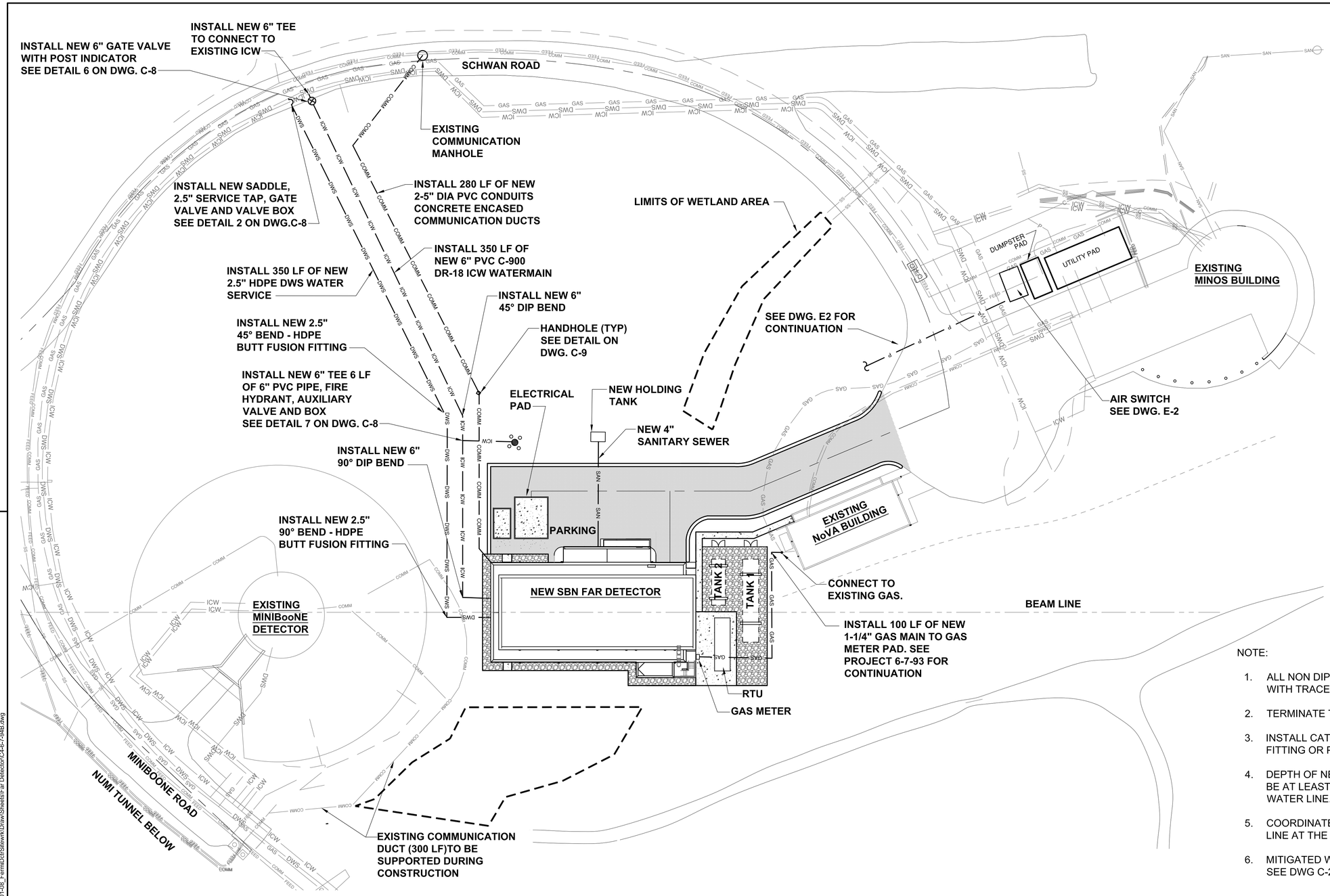

NOTE:

1. ALL NON DIP WATER MAIN SHALL BE INSTALLED WITH TRACER WIRE.
2. TERMINATE TRACER WIRE AT TRACER BOX.
3. INSTALL CATHODIC PROTECTION AT EVERY DIP FITTING OR PIPE SECTION. SEE DETAIL 3, DWG. C-8.
4. DEPTH OF NEW ICW AND DWS WATER MAIN SHALL BE AT LEAST 5'-6' BELOW GROUND TO TOP OF WATER LINE.
5. COORDINATE CONNECTION OF DWS, ICW AND SAN LINE AT THE BUILDING WITH PROJECT 6-7-93.
6. MITIGATED WETLANDS NOT SHOWN FOR CLARITY. SEE DWG C-2 FOR LIMITS.

REV.	DATE	DESCRIPTIONS
	3/30/15	ISSUED FOR PROPOSALS

REVISIONS

CMT
CRAWFORD, MURPHY & TILLY, INC.
CONSULTING ENGINEERS
550 NORTH COMMONS DRIVE
SUITE 116
AURORA, ILLINOIS
60504
(630) 820-1022
(630) 820-0350 FAX

	NAME	DATE
DESIGNED	A. KUCHIMANCHI	3-30-2015
DRAWN	A. KUCHIMANCHI	3-30-2015
CHECKED	T. O'GRADY	3-30-2015
APPROVED		
SUBMITTED		

S W E PROJECT NORTH

SCALE:
1" = 30'-0" 30' 0 30' 60' SCALE FEET

FERMI NATIONAL ACCELERATOR LABORATORY
UNITED STATES DEPARTMENT OF ENERGY

SBN FDB SITE WORK
UTILITY PLAN

DRAWING NO. 6-7-94B C-4 REV.

30 MARCH 2015

Mar 30, 2015 - 12:11pm J:\HolabirdRoot\14201-08_FermiDotSitework\DrawSheets\Far Detector\C4-6-7-94B.dwg

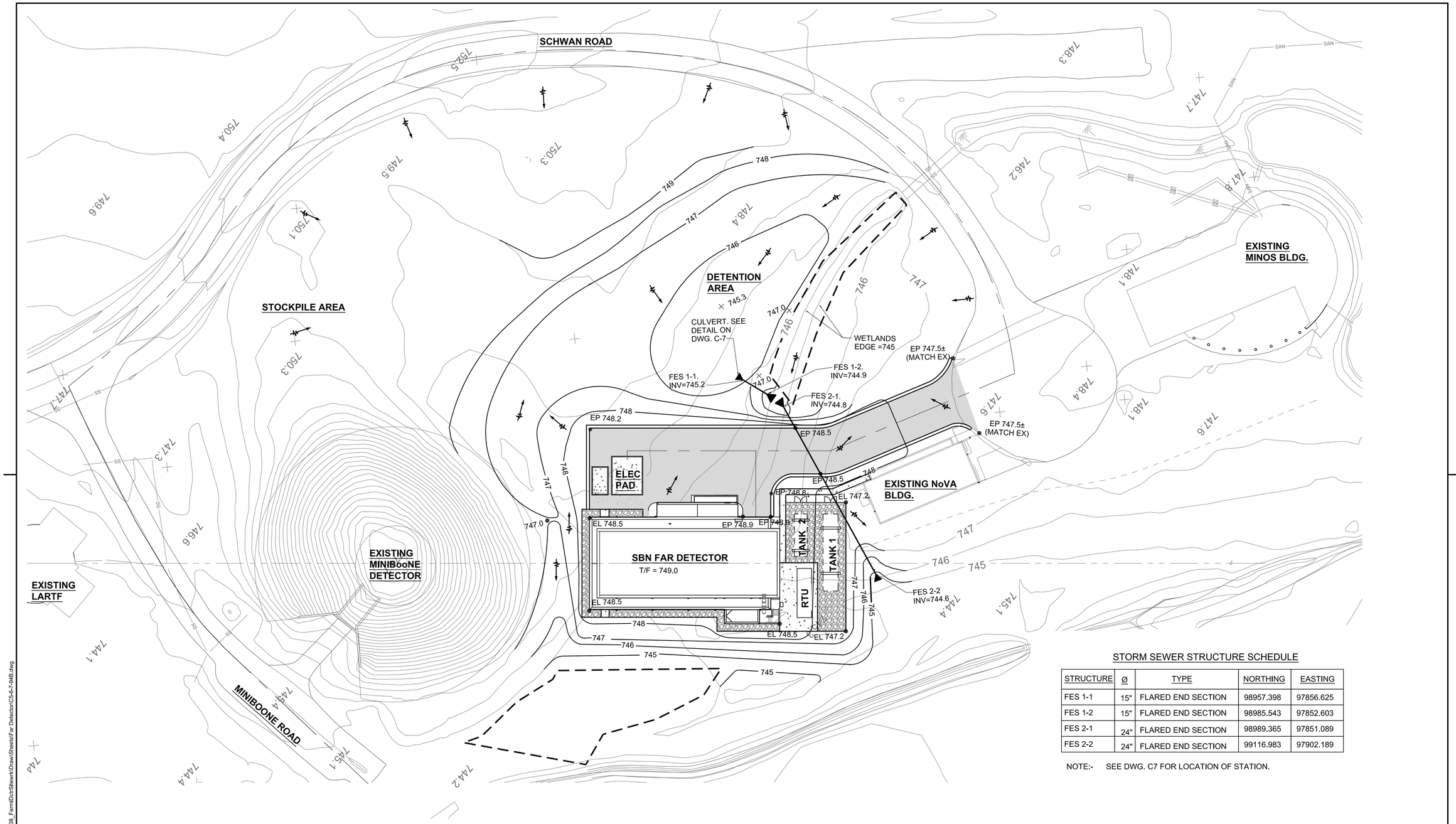

STORM SEWER STRUCTURE SCHEDULE

STRUCTURE	Ø	TYPE	NORTHING	EASTING
FES 1-1	15"	FLARED END SECTION	98957.398	97856.625
FES 1-2	15"	FLARED END SECTION	98985.543	97852.603
FES 2-1	24"	FLARED END SECTION	98989.365	97851.089
FES 2-2	24"	FLARED END SECTION	99116.983	97902.189

NOTE:- SEE DWG. C7 FOR LOCATION OF STATION.

REV.	DATE	DESCRIPTIONS
	3/30/15	ISSUED FOR PROPOSALS

REVISIONS

CMT

CRAWFORD, MURPHY & TILLY, INC.
CONSULTING ENGINEERS

550 NORTH COMMONS DRIVE
SUITE 116
AURORA, ILLINOIS
60504
(630) 820-1022
(630) 820-0350 FAX

	NAME	DATE
DESIGNED	A. KUCHIMANCHI	3-30-2015
DRAWN	A. KUCHIMANCHI	3-30-2015
CHECKED	T. O'GRADY	3-30-2015
APPROVED		
SUBMITTED		

S W E PROJECT NORTH

SCALE:

1" = 30'-0" 30' 0 30' 60' SCALE FEET

FERMI NATIONAL ACCELERATOR LABORATORY

UNITED STATES DEPARTMENT OF ENERGY

SBN FDB SITE WORK
GRADING AND DRAINAGE

DRAWING NO. **6-7-94B** **C-5** REV.

30 MARCH 2015

Mar 30, 2015 - 12:14pm J:\HolabirdRoot\14201-08_FermiDctrSitewrk\Draw\Sheets\Far Detector\C5-6-7-94B.dwg

RESTORATION NOTES

1. SUBCONTRACTOR TO REGRADE, PLACE 6" OF TOPSOIL AND SEED ALL DISTURBED AREAS.
2. REMAINING SOIL IN STOCKPILE AREA SHALL BE SPREAD, COVERED WITH 6" OF TOPSOIL AND SEEDED.

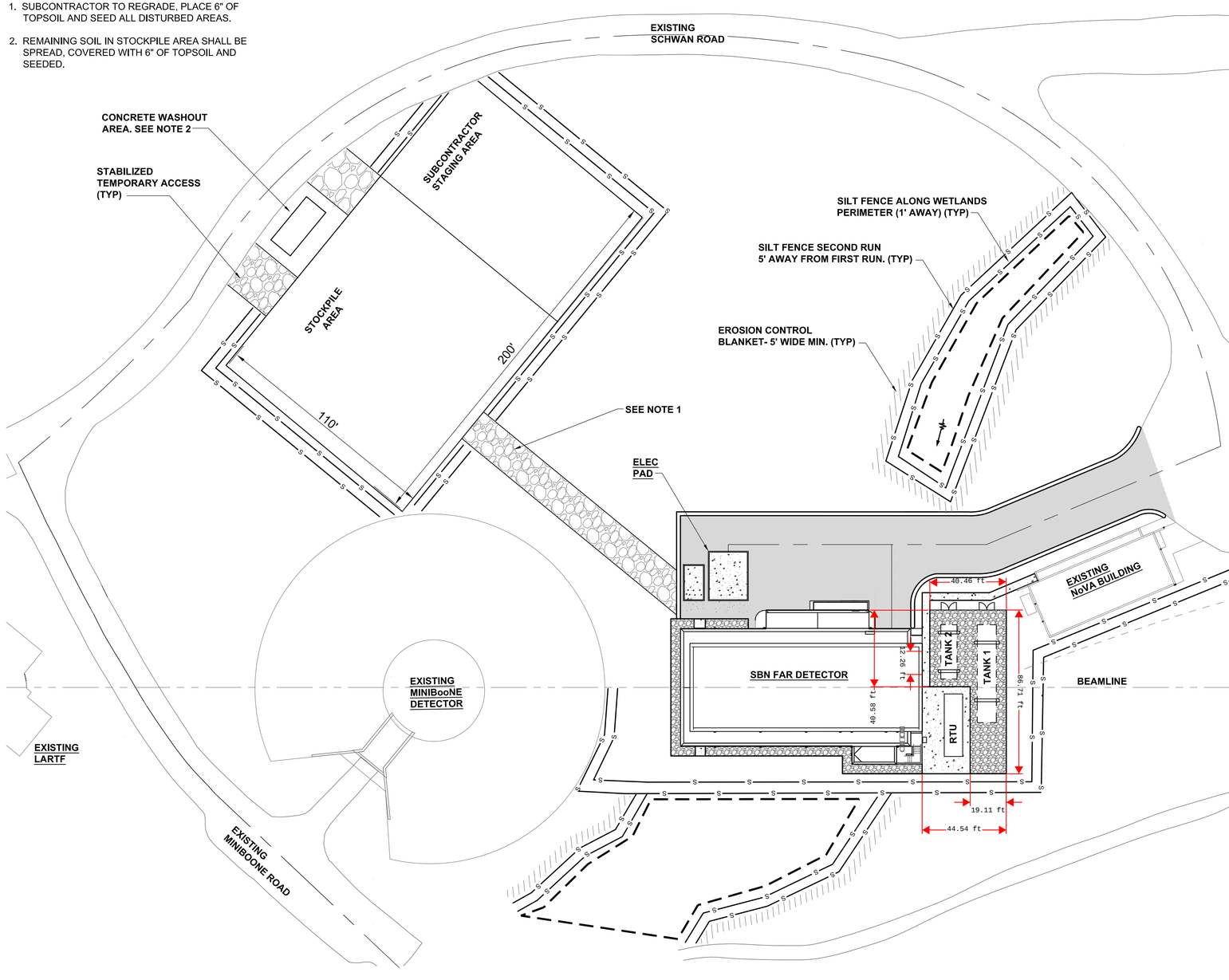

NOTES:

1. SUBCONTRACTOR SHALL COORDINATE WITH PROJECT FIELD ENGINEER FOR RELOCATING TEMPORARY ACCESS DURING SITE GRADING.
2. CONCRETE WASHOUT SHOULD BE CONTAINED AT ALL TIMES. WASHOUT MATERIAL SHOULD NOT BE ALLOWED TO ENTER STORM SEWERS, LEACH INTO THE SOIL OR ENTER THE WETLAND AREA UNDER ANY CIRCUMSTANCES. ANY WASTE SHOULD BE DISPOSED OF PROPERLY AND THE LOCATION OF THE WASHOUT SHOULD BE DESIGNATED WITH PROPER SIGNAGE.
3. STABILIZATION OF DISTURBED AREAS MUST BE INITIATED WITHIN 1 WORKING DAY OF PERMANENT OR TEMPORARY CESSATION OF EARTH DISTURBING ACTIVITIES AND SHALL BE COMPLETED AS SOON AS POSSIBLE BUT NOT LATER THAN 14 DAYS FROM THE INITIATION OF THE STABILIZATION WORK IN AN AREA.
4. THE PRIMARY PURPOSE OF ALL SOIL EROSION AND SEDIMENT CONTROL BMP's (BEST MANAGEMENT PRACTICES) IS TO PREVENT SEDIMENT FROM LEAVING THE SITE. ALL STORMWATER DISCHARGE LOCATIONS WITH A DIRECT CONNECTION TO THE SITE SHOULD BE MONITORED CLOSELY FOR EVIDENCE OF SEDIMENT. FERMILAB MAY REQUEST THAT ADDITIONAL BMP's BE INSTALLED IN THE EVENT OF OFF-SITE SEDIMENT DISCHARGE OR HIGH POTENTIAL FOR DISCHARGE.
5. UNLESS OTHERWISE INDICATED, ALL VEGETATIVE AND STRUCTURAL EROSION AND SEDIMENT CONTROL PRACTICES WILL BE CONSTRUCTED ACCORDING TO MINIMUM STANDARDS AND SPECIFICATIONS IN THE ILLINOIS URBAN MANUAL, CURRENT EDITION.
6. A COPY OF THE APPROVED EROSION AND SEDIMENT CONTROL PLAN SHALL BE MAINTAINED ON THE SITE AT ALL TIMES. THE SUBCONTRACTOR IS RESPONSIBLE FOR INSTALLATION OF ANY ADDITIONAL EROSION CONTROL MEASURES NECESSARY TO PREVENT EROSION AND SEDIMENTATION AS DETERMINED BY FERMILAB.
7. PRIOR TO COMMENCING LAND-DISTURBING ACTIVITIES IN AREAS OTHER THAN INDICATED ON THESE PLANS (INCLUDING BUT NOT LIMITED TO, ADDITIONAL PHASES OF DEVELOPMENT AND OFF-SITE BORRO OR WASTE AREAS) A SUPPLEMENTARY EROSION CONTROL PLAN SHALL BE SUBMITTED FOR REVIEW BY KDSWCD THRU FERMILAB.
8. SUBCONTRACTOR SHALL CLEAN EXISTING ROADWAY AT THE END OF EACH WORK DAY TO REMOVE ANY DIRT, MUD, OR DEBRIS THAT HAS ACCUMULATED DURING CONSTRUCTION OPERATIONS. COST SHALL BE INCIDENTAL TO THE PROJECT.
9. DURING DEWATERING OPERATIONS, WATER SHALL BE PUMPED INTO SEDIMENT BASINS OR SILT TRAPS. DEWATERING DIRECTLY INTO DITCHES/FIELD TILES OR STORMWATER STRUCTURES IS PROHIBITED.
10. ALL EROSION CONTROL MEASURES MUST BE INSPECTED WEEKLY AND AFTER EACH 1/2" RAIN EVENT.
11. THE CONDITION OF THE CONSTRUCTION SITE FOR WINTER SHUTDOWN SHALL BE ADDRESSED EARLY IN THE FALL GROWING SEASON SO THAT SLOPES AND OTHER BARE EARTH AREAS MAY BE STABILIZED WITH TEMPORARY AND/OR PERMANENT VEGETATIVE COVER FOR PROPER EROSION AND SEDIMENT CONTROL. ALL OPEN AREAS THAT ARE TO REMAIN IDLE THROUGHOUT THE WINTER SHALL RECEIVE TEMPORARY EROSION CONTROL MEASURES INCLUDING TEMPORARY SEEDING, MULCHING AND/OR EROSION CONTROL BLANKET PRIOR TO THE END OF THE FALL GROWING SEASON. THE AREAS TO BE WORKED BEYOND THE END OF THE GROWING SEASON MUST INCORPORATE SOIL STABILIZATION MEASURES THAT DO NOT RELY ON VEGETATIVE COVER SUCH AS EROSION CONTROL BLANKET AND HEAVY MULCHING.
12. STOCKPILES OF SOIL AND OTHER BUILDING MATERIALS TO REMAIN IN PLACE MORE THAN THREE (3) DAYS SHALL BE FURNISHED WITH EROSION AND SEDIMENT CONTROL MEASURES (I.E. PERIMETER SILT FENCE). STOCKPILES TO REMAIN IN PLACE FOR 14 DAYS OR MORE SHALL RECEIVE TEMPORARY SEEDING.
13. IN AREAS WHERE WORK IS COMPLETE, PERMANENT STABILIZATION SHALL OCCUR WITHIN 7 DAYS OF COMPLETION, AND IN AREAS WHERE WORK HAS TEMPORARILY CEASED FOR 14 DAYS OR MORE, TEMPORARY STABILIZATION SHALL OCCUR BY THE 14TH DAY AFTER WORK HAS CEASED.
14. FINAL STABILIZATION MUST BE COMPLETED WITHIN 7 DAYS OF FINAL GRADING.
15. PERIMETER SILT FENCE MUST REMAIN IN PLACE AND MAINTAINED THROUGHOUT THE PROJECT UNTIL VEGETATION HAS BEEN ESTABLISHED.
16. IT IS THE RESPONSIBILITY OF THE SUBCONTRACTOR TO INFORM ANY SUB-SUBCONTRACTOR(S) WHO MAY PERFORM WORK ON THIS PROJECT, OF THE REQUIREMENTS IN IMPLEMENTING AND MAINTAINING THESE EROSION CONTROL PLANS AND THE NATIONAL POLLUTANT DISCHARGE ELIMINATION SYSTEM (NPDES) PERMIT REQUIREMENTS SET FORTH BY THE ILLINOIS EPA.
17. AT A MINIMUM THE SUB-CONTRACTOR SHALL PLACE TWO RUNS OF EROSION CONTROL FABRIC FENCE BETWEEN THE WORK AREA AND ANY STREAM, WETLAND OR WETLAND BUFFER, FLOODPLAIN, RIPARIAN AREA, DRAINAGE WAY, SWALE OR POND. ADDITIONALLY, THE SUB-CONTRACTOR SHALL PROVIDE AROUND ALL INLETS, END SECTIONS AND OTHER DRAINAGE PIPES AN ENCLOSURE OF SUITABLE TEMPORARY EROSION CONTROL MEASURES TO PREVENT CLODS OF DIRT, ROCK AND OTHER DEBRIS FROM ENTERING INTO THE DRAIN WAYS NEAR THE CONSTRUCTION ACTIVITIES.

REV.	DATE	DESCRIPTIONS
	3/30/15	ISSUED FOR PROPOSALS

REVISIONS

CMT
CRAWFORD, MURPHY & TILLY, INC.
CONSULTING ENGINEERS
550 NORTH COMMONS DRIVE
SUITE 116
AURORA, ILLINOIS
60504
(630) 820-1022
(630) 820-0350 FAX

	NAME	DATE
DESIGNED	A. KUCHIMANCHI	3-30-2015
DRAWN	A. KUCHIMANCHI	3-30-2015
CHECKED	T. O'GRADY	3-30--2015
APPROVED		
SUBMITTED		

S W E PROJECT NORTH

SCALE:

1" = 30'-0" 30 0 30 60 SCALE FEET

FERMI NATIONAL ACCELERATOR LABORATORY

UNITED STATES DEPARTMENT OF ENERGY

SBN FDB SITE WORK

STAGING/ EXCAVATION/STORMWATER POLLUTION PREVENTION PLAN

DRAWING NO. 6-7-94B C-6 REV.

30 MARCH 2015

Mar 30, 2015 - 4:56pm J:\Hdabird\Root\142014-08_FermiDot\Sitework\Draw\Sheets\Far Detector\C6-6-7-94B.dwg

SILT FENCE PLAN

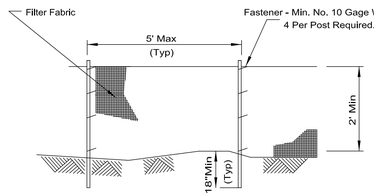

ELEVATION

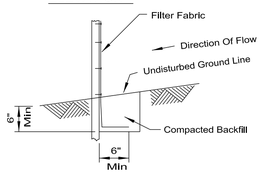

FABRIC ANCHOR DETAIL

NOTES:
1. Temporary sediment fence shall be installed prior to any grading work in the area to be protected. They shall be maintained throughout the construction period and removed in conjunction with the final grading and site stabilization.
2. Filter fabric shall meet the requirements of material specification 592 Geotextile Table 1 or 2, Class with equivalent opening size of at least 30 for nonwoven and 50 for woven.
3. Fence posts shall be either standard steel post or wood post with a minimum cross-sectional area of 3.0 sq. in.

REFERENCE			STANDARD DWG. NO.
Project		NRCS Natural Resources Conservation Service	IL-620
Designed	Date		SHEET 1 OF 2
Checked	Date		DATE 11-20-01
Approved	Date		

SILT FENCE

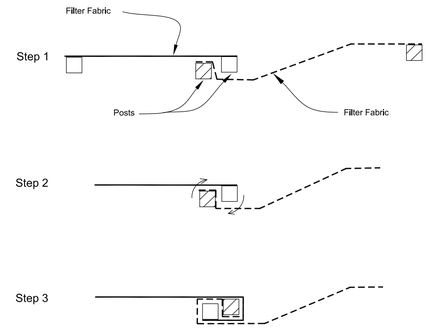

ATTACHING TWO SILT FENCES

NOTES:
1. Place the end post of the second fence inside the end post of the first fence.
2. Rotate both posts at least 180 degrees in a clockwise direction to create a tight seal with the fabric material. Drive both posts a minimum of 18 inches into the ground and bury the flap.
3.

REFERENCE			STANDARD DWG. NO.
Project		NRCS Natural Resources Conservation Service	IL-620(W)
Designed	Date		SHEET 2 OF 2
Checked	Date		DATE 1-29-99
Approved	Date		

EROSION CONTROL BLANKET INSTALLATION DETAILS

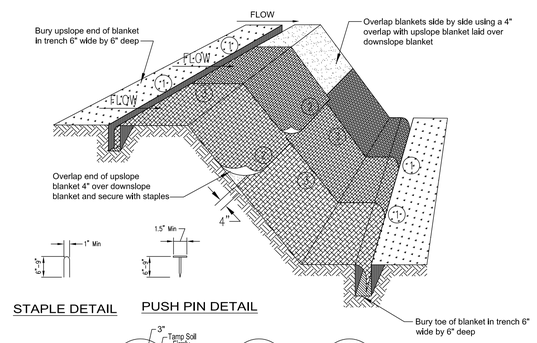

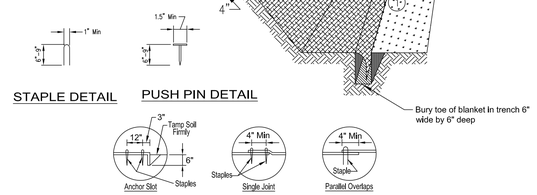

NOTES:
1. Staples shall be placed in a diamond pattern at 2 per s.y. for sticked blankets. Non-stiched shall use 4 staples per s.y. of material. This equates to 200 staples with stiched blanket and 400 stapels with non-stiched blanket per 100 s.y. of material.
2. Staple or push pin lengths shall be selected based on soil type and conditions. (minimum staple length is 6")
3. Erosion control material shall be placed in contact with the soil over a prepared seedbed.
4. All anchor slots shall be stapled at approximately 12" intervals.

REFERENCE			STANDARD DWG. NO.
Project		NRCS Natural Resources Conservation Service	IL-530
Designed	Date		SHEET 1 OF 1
Checked	Date		DATE 11-20-01
Approved	Date		

PIPE OUTLET PROTECTION

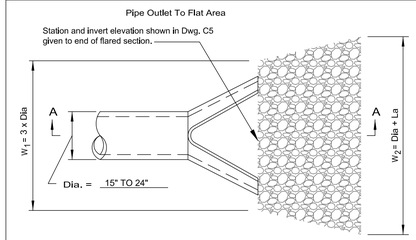

PLAN

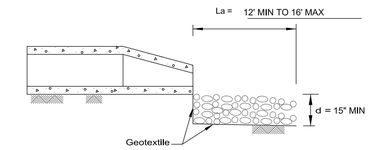

SECTION A-A

NOTES:
1. The filter fabric shall be non-woven needle punched meeting the requirements in material specification 592 GEOTEXTILE Table 1 or 2, Class I, II, or III.
2. The rock riprap shall meet the IDOT requirements for the following gradation RR3.
3. The riprap shall be placed according to construction specification 61 LOOSE ROCK RIPRAP. The rock may be equipment placed.

REFERENCE			STANDARD DWG. NO.
Project		NRCS Natural Resources Conservation Service	IL-610
Designed	Date		SHEET 1 OF 1
Checked	Date		DATE 8-19-94
Approved	Date		REV: 9-21-09 CPD

TEMPORARY CONCRETE WASHOUT FACILITY - EARTHEN TYPE

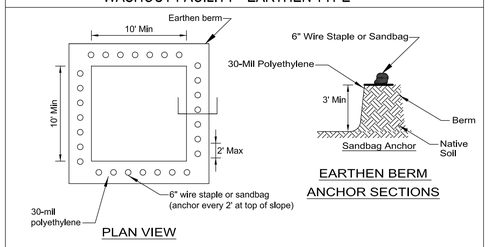

PLAN VIEW

EARTHEN BERM ANCHOR SECTIONS

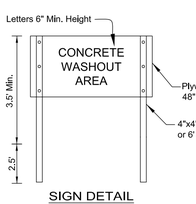

SIGN DETAIL

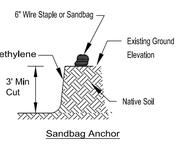

SUBGRADE ANCHOR SECTIONS

NOTES:
1. Maintaining temporary concrete washout facilities shall include removing and disposing of hardend concrete and/or slurry and returning the facilities to a functional condition.
2. Facility shall be cleaned or reconstructed in a new area once washout becomes two-thirds full.

REFERENCE			STANDARD DWG. NO.
Project		NRCS Natural Resources Conservation Service	IL-660
Designed	Date		SHEET 1 OF 1
Checked	Date		DATE 11-20-01
Approved	Date		

TEMPORARY SEDIMENT TRAP

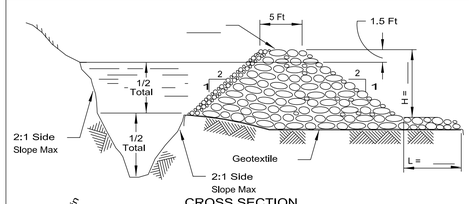

CROSS SECTION

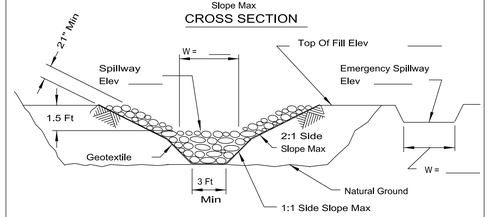

STONE SECTION

NOTES:
1. If the sediment pool is formed or enlarged the side slope will be 2:1 or flatter.
2. The fill shall be constructed using IDOT RR-4 stone size. A 11layer of IDOT CA-2 should be placed on the inside face to reduce the flow rate.
3. The rock will be placed according to construction specification 25 ROCKFILL. Placement will be by Method 1 and compaction will be class III.
4. The geotextile shall meet the requirements in material specification 592 GEOTEXTILE table 1 or 2, class I, II or IV.

REFERENCE			STANDARD DWG. NO.
Project		NRCS Natural Resources Conservation Service	IL-660
Designed	Date		SHEET 1 OF 1
Checked	Date		DATE 11-20-01
Approved	Date		

CONSTRUCTION ROAD STABILIZATION

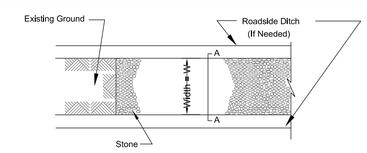

PLAN VIEW

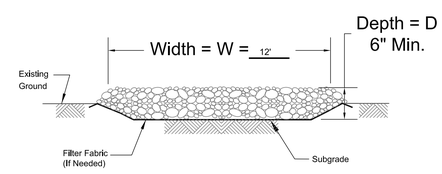

SECTION A-A

NOTES:
1. Filter fabric shall meet the requirements of material specification 592 GEOTEXTILE, Table 1 or 2, Class I, II or IV and shall be placed over the cleared area prior to the placing of rock. Stone shall meet one of the following IDOT coarse aggregate gradations, CA-1, CA-2, CA-3, or CA-4 and be
2. placed according to construction specification 25 ROCKFILL using placement Method 1 and Class III compaction. See plans for construction road location, D and W dimensions.
3. Minimum width is 14 feet for one-way traffic and 20 feet for two-way traffic. Two-way traffic widths shall be
4. Increased a minimum of 4 feet for trailer traffic. Depending on the type of vehicle or equipment, speed, loads, climatic and other conditions under which vehicles and equipment operate an increase in the minimum widths may be required. Roadway shall follow the contour of the natural terrain to the extent possible.
5.

REFERENCE			STANDARD DWG. NO.
Project		NRCS Natural Resources Conservation Service	IL-506
Designed	Date		SHEET 1 OF 1
Checked	Date		DATE 1-29-99
Approved	Date		

SOIL STABILIZATION CHART

STABILIZATION TYPE	JAN.	FEB.	MAR.	APR.	MAY	JUNE	JULY	AUG.	SEPT	OCT.	NOV.	DEC.
PERMANENT SEEDING			A			*	*	*	*	*		
DORMANT SEEDING	B										B	
TEMPORARY SEEDING			C				D					
SODDING			E**									
MULCHING	F											

A. SEE SPECIFICATION FOR SEED MIX.
B. SEE SPECIFICATION FOR SEED MIX.
* IRRIGATION NEEDED.
** IRRIGATION NEEDED FOR 2 TO 3 WEEKS AFTER APPLYING SOD.
C. SPRING OATS 100 LBS/ACRE.
D. WHEAT OR CEREAL RYE 150 LBS/ACRE.
E. SOD (NOT APPLICABLE)
F. STRAW MULCH 2 TONS/ACRE.

REV.	DATE	DESCRIPTIONS
	3/30/15	ISSUED FOR PROPOSALS

REVISIONS

CMT
CRAWFORD, MURPHY & TILLY, INC.
CONSULTING ENGINEERS
550 NORTH COMMONS DRIVE
SUITE 116
AURORA, ILLINOIS
60504
(630) 820-1022
(630) 820-0350 FAX

	NAME	DATE
DESIGNED	A. KUCHIMANCHI	3-30-2015
DRAWN	A. KUCHIMANCHI	3-30-2015
CHECKED	T. O'GRADY	3-30-2015
APPROVED		
SUBMITTED		

PROJECT NORTH

SCALE:

FERMI NATIONAL ACCELERATOR LABORATORY
UNITED STATES DEPARTMENT OF ENERGY

SBN NDB SITE WORK
STORMWATER POLLUTION PREVENTION PLAN DETAILS

DRAWING NO. 6-7-94B C-7 REV.

30 MARCH 2015

Mar 30, 2015 - 9:15am J:\HolabirdRoot\14201-08_FermiDctrSitewrk\Draw\Sheets\Far Detector\C7-6-7-94B.dwg

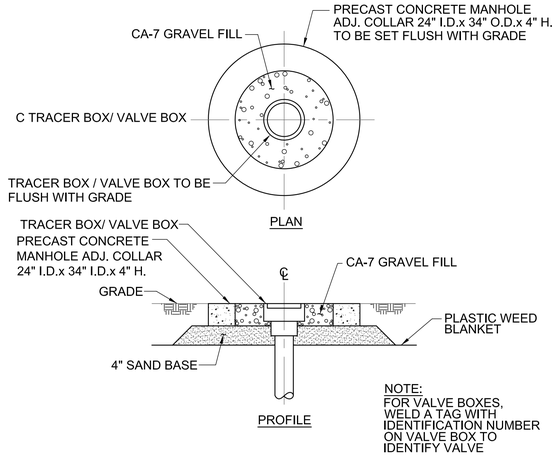

TYPICAL PROTECTION COLLAR

DETAIL 1
NOT TO SCALE

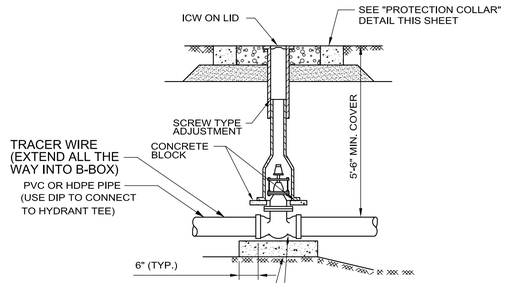

NOTES:

1. PROVIDE CATHODIC PROTECTION FOR ALL VALVES IN ACCORDANCE WITH THE SPECIFICATIONS.
2. PROVIDE HDPE FLANGE ADAPTER (SDR11) WITH D.I.P.S. BACK-UP RINGS AND FLANGED CONNECTIONS BETWEEN VALVE AND HDPE PIPE IF HDPE PIPE IS USED.
3. PROVIDE MEGALUGS WITH STAINLESS STEEL NUTS AND BOLTS AND POLYETHYLENE WRAP.

TYPICAL WATER VALVE AND BOX

DETAIL 2 C-4
NOT TO SCALE

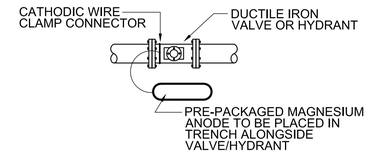

TYPICAL CATHODIC PROTECTION DETAIL
(FOR VALVES, HYDRANTS & DUCTILE IRON FITTINGS)

DETAIL 3 C-3
NOT TO SCALE

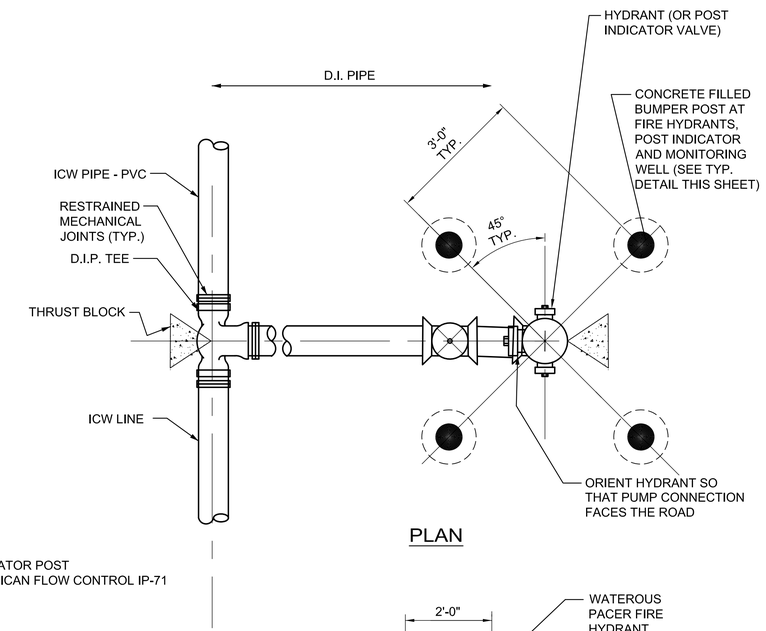

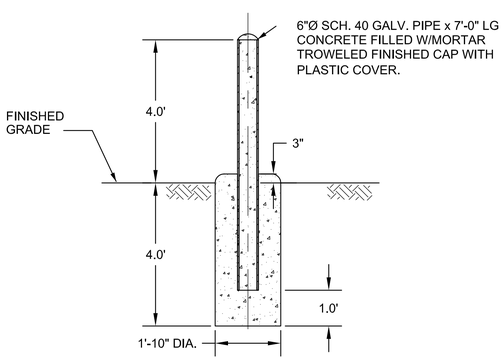

TYPICAL BUMPER POST DETAIL (BOLLARD)
(FOR FIRE HYDRANTS AND POST INDICATOR VALVES AND MONITORING WELL)

DETAIL 4 C-3
NOT TO SCALE

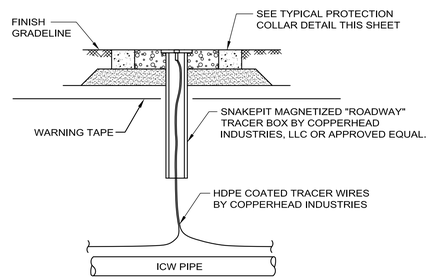

NOTES:

1. REINFORCED TRACER WIRE SHALL BE INSTALLED IN ACCORDANCE WITH THE MANUFACTURER'S RECOMMENDATIONS.
2. TRACER BOXES SHALL BE LOCATED AT EACH VALVE AND FIRE HYDRANT. MAXIMUM SPACING OF TRACER BOXES SHALL BE 750'.
3. DETECTABLE UNDERGROUND WARNING TAPE SHALL ALSO BE INSTALLED 6" TO 12" BELOW FINISHED GRADE AS SPECIFIED ON SHEET G-X.

TRACER BOX DETAIL

DETAIL 5 C-4
NOT TO SCALE

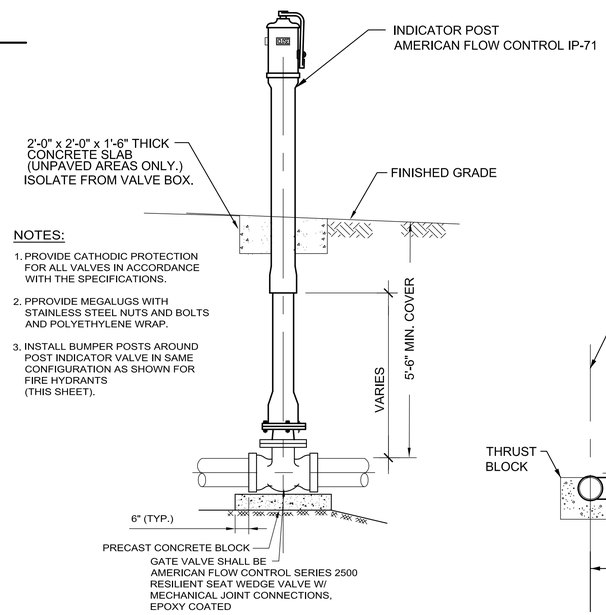

NOTES:

1. PROVIDE CATHODIC PROTECTION FOR ALL VALVES IN ACCORDANCE WITH THE SPECIFICATIONS.
2. PPROVIDE MEGALUGS WITH STAINLESS STEEL NUTS AND BOLTS AND POLYETHYLENE WRAP.
3. INSTALL BUMPER POSTS AROUND POST INDICATOR VALVE IN SAME CONFIGURATION AS SHOWN FOR FIRE HYDRANTS (THIS SHEET).

TYPICAL POST INDICATOR VALVE

DETAIL 6 C-4
NOT TO SCALE

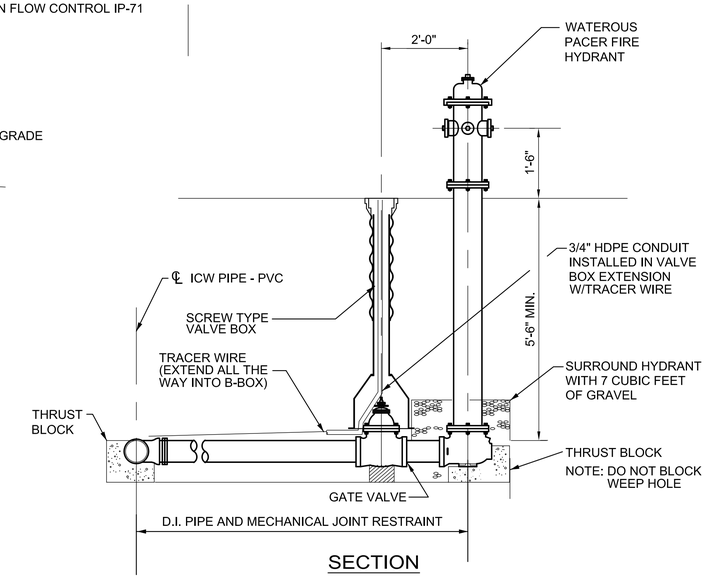

TYPICAL FIRE HYDRANT

DETAIL 7 C-4
NOT TO SCALE

REV.	DATE	DESCRIPTIONS
	3/30/15	ISSUED FOR PROPOSALS

REVISIONS

CMT
CRAWFORD, MURPHY & TILLY, INC.
CONSULTING ENGINEERS
550 NORTH COMMONS DRIVE
SUITE 116
AURORA, ILLINOIS
60504
(630) 820-1022
(630) 820-0350 FAX

	NAME	DATE
DESIGNED	A. KUCHIMANCHI	3-30-2015
DRAWN	A. KUCHIMANCHI	3-30-2015
CHECKED	T. O'GRADY	3-30-2015
APPROVED		
SUBMITTED		

S W E PROJECT NORTH

SCALE:

FERMI NATIONAL ACCELERATOR LABORATORY
UNITED STATES DEPARTMENT OF ENERGY

SBN FDB SITE WORK
MISC. DETAILS- I

DRAWING NO. **6-7-94B** **C-8** REV.

30 MARCH 2015

Mar 30, 2015 - 9:16am J:\Hdabir\Root\14201-08_FermiDocSitework\Draw\Sheets\Far Detector\C8-6-7-94B.dwg

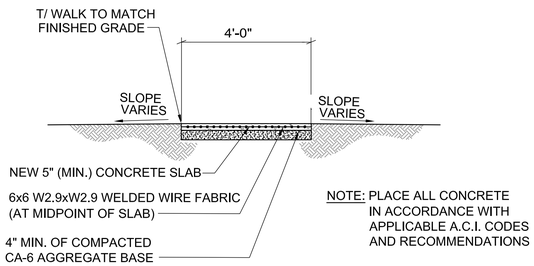

NOTE: PLACE ALL CONCRETE IN ACCORDANCE WITH APPLICABLE A.C.I. CODES AND RECOMMENDATIONS

TYPICAL SIDEWALK DETAIL

N.T.S.

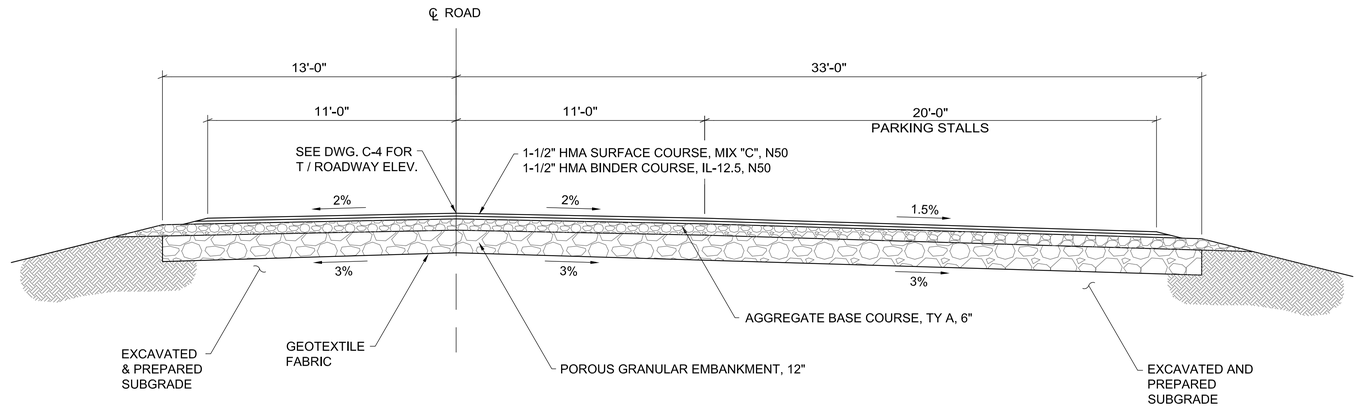

TYPICAL PAVEMENT AND PARKING DETAIL

N.T.S.

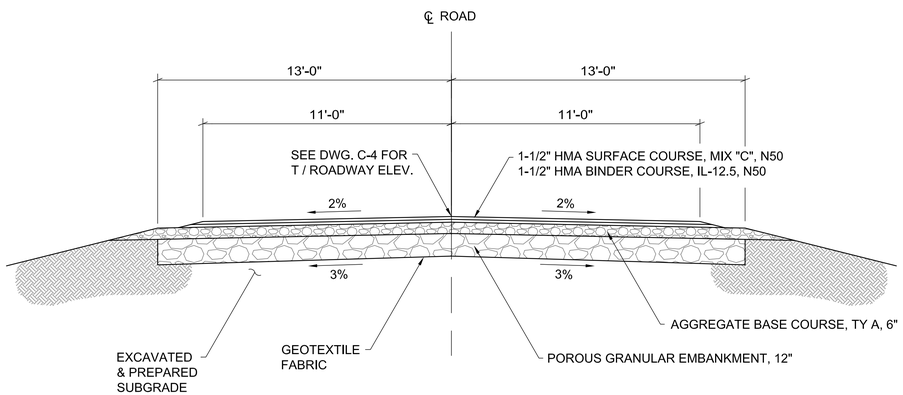

TYPICAL PAVEMENT DETAIL

N.T.S.

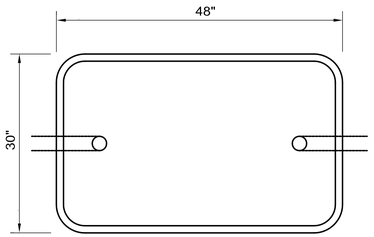

PLAN

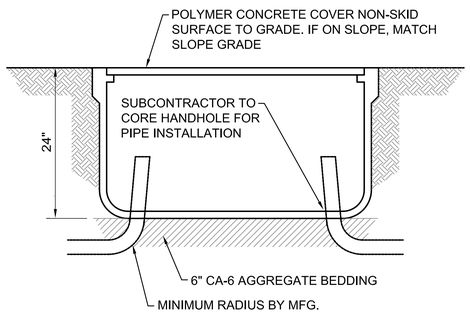

SECTION

HANDHOLE

N.T.S.

NOTE: EXCAVATION BACKFILL COMPACTED TO 95% DENSITY

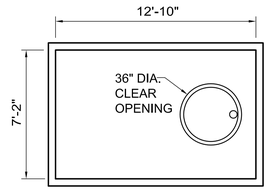

TOP VIEW

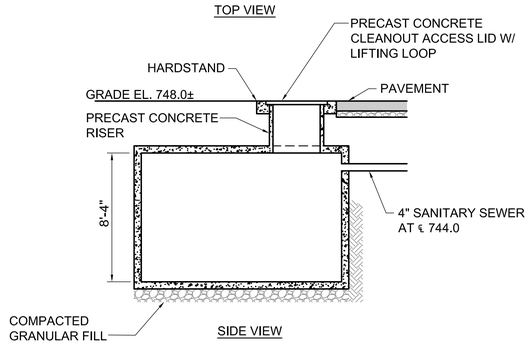

SIDE VIEW

SANITARY SEWER HOLDING TANK SCHEMATIC

N.T.S.

NOTES:

1. THE HOLDING TANK SHALL BE APPROVED BY THE ILLINOIS DEPARTMENT OF PUBLIC HEALTH.
2. DIMENSIONS ARE SUGGESTED. ACTUAL DIMENSIONS MAY VARY ACCORDING TO SUPPLIER.

REV.	DATE	DESCRIPTIONS
	3/30/15	ISSUED FOR PROPOSALS

REVISIONS

CMT

CRAWFORD, MURPHY & TILLY, INC.
CONSULTING ENGINEERS

550 NORTH COMMONS DRIVE
SUITE 116
AURORA, ILLINOIS
60504
(630) 820-1022
(630) 820-0350 FAX

	NAME	DATE
DESIGNED	A. KUCHIMANCHI	3-30-2015
DRAWN	A. KUCHIMANCHI	3-30-2015
CHECKED	T. O'GRADY	3-30-2015
APPROVED		
SUBMITTED		

S W E
PROJECT NORTH

SCALE:

FERMI NATIONAL ACCELERATOR LABORATORY

UNITED STATES DEPARTMENT OF ENERGY

SBN FDB SITE WORK

MISC. DETAILS - II

DRAWING NO. **6-7-94B** **C-9** REV.

30 MARCH 2015

Mar 30, 2015 - 9:17am J:\Holabird\Root\14201-08_FermiDctrSitewrk\Draw\Sheets\Far Detector\C9-6-7-94B.dwg

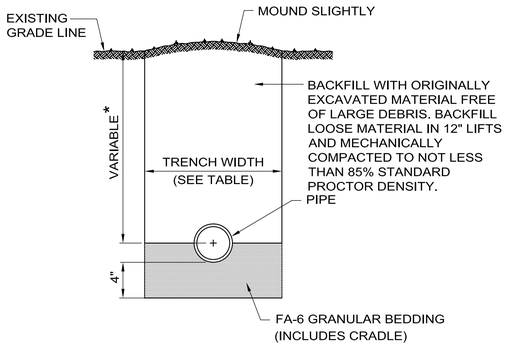

NON-PAVED AREAS

* 5'-6" MIN. COVER FOR I.C.W. PIPING

TRENCH DETAILS

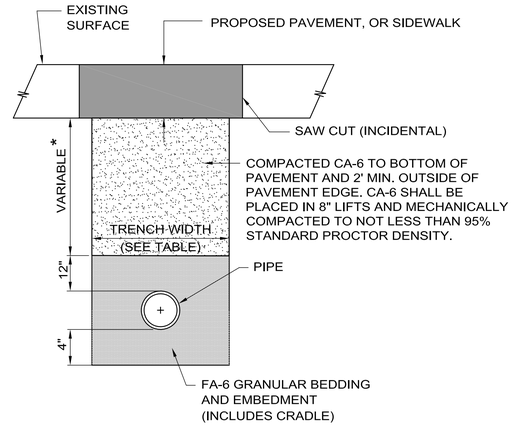

ALL PAVED AREAS

INSIDE DIAMETER OF PIPE (INCHES)	MAXIMUM TRENCH WIDTH
6	3'-7"
8	3'-9"
12	4'-2"
14	4'-4"
15	4'-6"
18	4'-9"
21	5'-0"
24	5'-4"
27	5'-7"
30	5'-11"
36	6'-6"

NOTE:
1. CONTRACTOR SHALL PROVIDE TRENCH SUPPORT FOR ALL ROADWAYS.

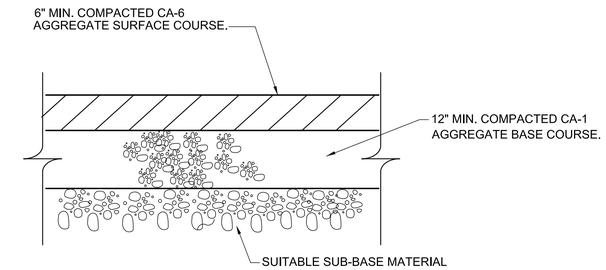

HARDSTAND

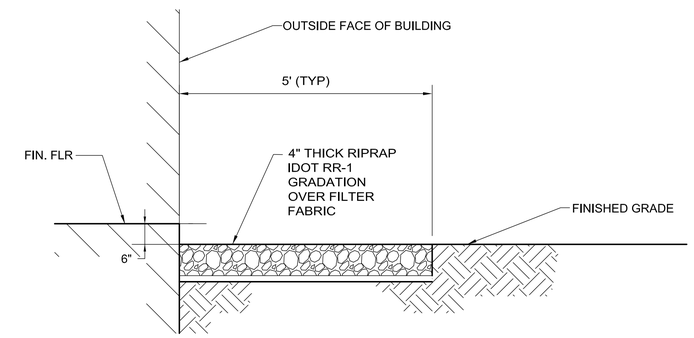

ROCK MULCH DETAIL

100 P.S.I. TABLE																
SIZE	90° BEND			45° BEND			22-1/2° BEND			11-1/4° BEND			TEE OR PLUG		
	A	B	C	A	B	C	A	B	C	A	B	C	A	B	C
4"& 6"	2'-0"	1'-4"	9"	1'-6"	1'-0"	6"	1'-11"	0'-8"	6"	0'-9"	0'-6"	6"	2'-5"	1'-7"	1'-0"
8"	2'-8"	1'-10"	1'-0"	2'-0"	1'-4"	8"	1'-5"	1'-0"	8"	1'-0"	0'-8"	8"	3'-2"	2'-2"	1'-3"
10"	3'-4"	2'-3"	1'-3"	2'-6"	1'-8"	10"	1'-9"	1'-2"	8"	1'-3"	0'-10"	8"	4'-0"	2'-8"	1'-7"
12"	4'-0"	2'-8"	1'-6"	3'-0"	2'-0"	1'-0"	2'-2"	1'-5"	8"	1'-6"	1'-0"	8"	4'-10"	3'-2"	1'-11"
14"	4'-8"	3'-2"	1'-9"	3'-6"	2'-4"	1'-2"	2'-6"	1'-8"	8"	1'-9"	1'-2"	8"	5'-7"	3'-9"	2'-3"
16"	5'-4"	3'-7"	2'-0"	3'-11"	2'-8"	1'-4"	2'-10"	1'-11"	9"	2'-0"	1'-4"	8"	6'-4"	4'-3"	2'-6"
18"	6'-0"	4'-0"	2'-3"	4'-5"	3'-0"	1'-6"	3'-2"	2'-2"	10"	2'-3"	1'-6"	8"	7'-2"	4'-9"	2'-10"
20"	6'-8"	4'-5"	2'-6"	4'-11"	3'-4"	1'-8"	3'-6"	2'-4"	11"	2'-6"	1'-8"	8"	7'-11"	5'-4"	3'-2"
24"	8'-0"	5'-4"	3'-0"	5'-11"	3'-11"	2'-0"	4'-3"	2'-10"	1'-1"	3'-0"	2'-0"	8"	9'-6"	6'-4"	3'-9"

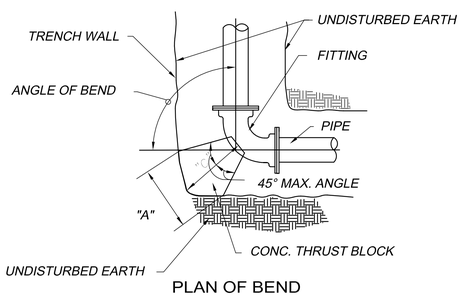

PLAN OF BEND

N.T.S.

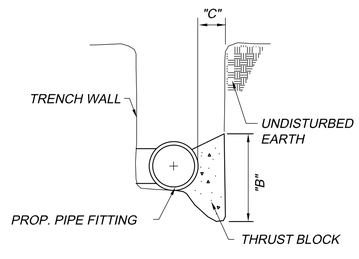

SECTION

N.T.S.

THRUST BLOCK DETAILS
(FOR HORIZONTAL ALIGNMENT)

DETAIL

NOT TO SCALE

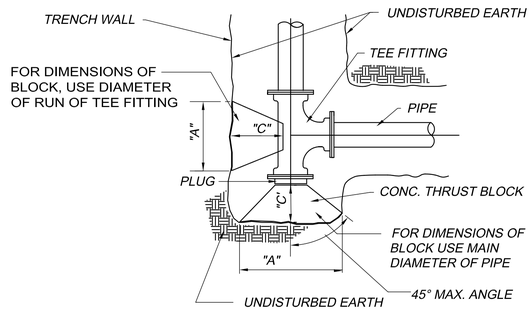

PLAN OF TEE

N.T.S.

NOTES:

1. ALL BENDS, TEES, PLUGS, FITTINGS OR OTHER SIGNIFICANT CHANGES IN ALIGNMENT SHALL BE BRACED WITH POURED CONCRETE THRUST BLOCKS FITTINGS WITH RETAINING GLANDS WILL NOT BE ALLOWED.

2. "C' DIMENSION SHALL BE AS REQUIRED TO REACH UNDISTURBED EARTH BUT NOT LESS THAN VALUE LISTED IN TABLE.

3. DIMENSIONS "A" AND "B" ARE BASED ON INTERNAL PIPE PRESSURE OF 100 P.S.I. AND BEARING ON THE UNDISTURBED SOIL OF 1500 P.S.F.

4. "B"= HEIGHT OF THRUST BLOCK

5. ALL PLUGS SHALL BE SEPARATED FROM THE CONCRETE THRUST BLOCK BY A LAYER OF 5 MIL PLASTIC SHEET

6. ALL POURED CONCRETE SHALL BE 3000 psi @ 28 DAYS.

7. IN ADDITION TO THRUST BLOCKING, MECHANICAL JOINT RESTRAINT SHALL BE INSTALLED ON ALL FITTINGS. D.I.P. MECHANICAL JOINT RESTRAINT SHALL BE MEGALUG AS MANUFACTURED BY EBAA IRON OR APPROVED EQUAL. WHEN RESTRAINING HDPE PIPE TO D.I.P. MJ FITTINGS, MECHANICAL JOINT RESTRAINT SHALL BE SERIES 2000PV AS MANUFACTURED BY EBAA IRON OR APPROVED EQUAL.

8. NUTS, BOLTS AND THREADED RODS SHALL BE STAINLESS STEEL.

REV.	DATE	DESCRIPTIONS
	3/30/15	ISSUED FOR PROPOSALS

REVISIONS

CMT
CRAWFORD, MURPHY & TILLY, INC.
CONSULTING ENGINEERS
550 NORTH COMMONS DRIVE
SUITE 116
AURORA, ILLINOIS
60504
(630) 820-1022
(630) 820-0350 FAX

	NAME	DATE
DESIGNED	A. KUCHIMANCHI	3-30-2015
DRAWN	A. KUCHIMANCHI	3-30-2015
CHECKED	T. O'GRADY	3-30-2015
APPROVED		
SUBMITTED		

PROJECT NORTH

SCALE:

FERMI NATIONAL ACCELERATOR LABORATORY

UNITED STATES DEPARTMENT OF ENERGY

SBN FDB SITE WORK

MISC. DETAILS- III

DRAWING NO. **6-7-94B** **C-10** REV.

30 MARCH 2015

Mar 30, 2015 - 12:13pm J:\Holabird\Root\14201-08_FermiDct\Sitework\Draw\Sheets\Far Detector\C10-6-7-94B.dwg

ARCHITECTURAL SITE PLAN

SCALE: 1" = 30'-0"

REV.	DATE	DESCRIPTION

REVISIONS

HOLABIRD & ROOT

140 South Dearborn Chicago, IL 60603
Tel: 312 357 1771 Fax: 312 357 1909

www.holabird.com

	FERMI LAB	DATE
DESIGNED	M.BLEWITT	03/30/2015
DRAWN	M.BLEWITT	03/30/2015
CHECKED	G.GRUNLOH	03/30/2015
APPROVED		
SUBMITTED		

S W E PROJECT NORTH

SCALE:
1"=30'-0"
30 0 30 60
SCALE FEET

FERMI NATIONAL ACCELERATOR LABORATORY

UNITED STATES DEPARTMENT OF ENERGY

SBN FAR DETECTOR BUILDING

ARCHITECTURAL SITE PLAN

DRAWING NO. 6-7-93 A-0 REV.

30 MAR. 2015

C:\Users\Matt_B\Desktop\Revit Locals\15592_SBN_Far_Detector_blewittm.rvt

3/30/2015 8:36:40 PM

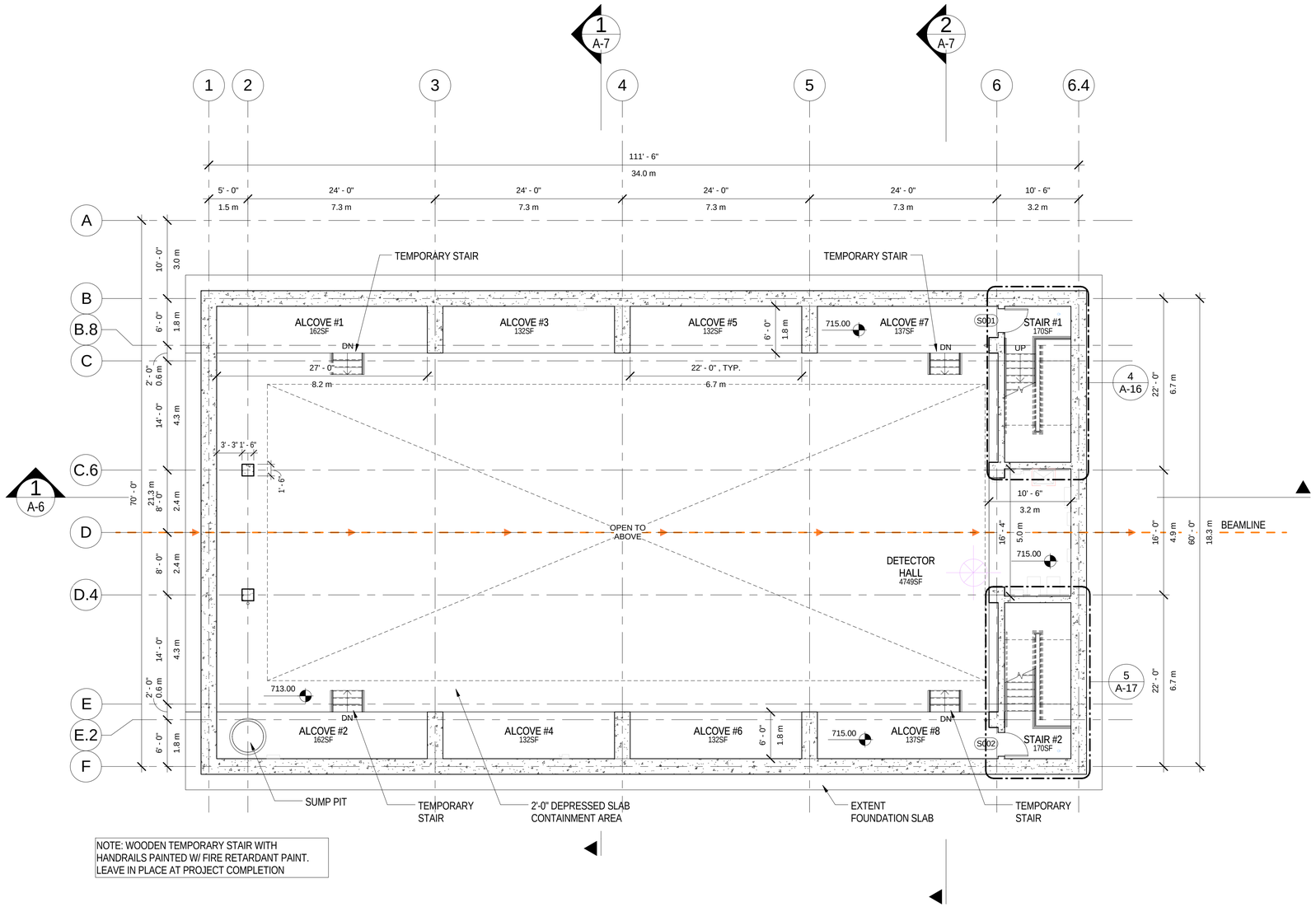

NOTE: WOODEN TEMPORARY STAIR WITH HANDRAILS PAINTED W/ FIRE RETARDANT PAINT. LEAVE IN PLACE AT PROJECT COMPLETION

ENCLOSURE LEVEL PLAN

SCALE: 1/8" = 1'-0"

GENERAL NOTES: FLOOR PLANS

1. SEE LS-SERIES DWGS FOR FIRE-RATED PARTITION LOCATIONS.
2. SEE SHEET A-20 FOR DOOR SCHEDULE.
3. SEE SHEET A-21 FOR PARTITION TYPES.
4. SUBCONTRACTOR SHALL VERIFY ALL FIELD CONDITIONS FOR COORD. OF ALL TRADES AND REPORT ANY CONFLICTS OR DISCREPANCIES TO FERMILAB.
5. ALL DIMENSIONS ARE LOCATED AT FACE OF FINISH, U.N.O.
6. PROVIDE 18" MIN, WHERE POSSIBLE, ON LATCH SIDE OF ALL DOORS. ALL DOOR FRAMES TO BE 4" FROM THE CLOSEST PERPENDICULAR PARTITION, U.N.O.
7. PROVIDE MOP SINK WITH WALL GUARD, MOP HOLDER AND UTILITY SHELF AT ALL JANITOR CLOSETS.
8. FILL ALL SLAB PENETRATIONS WITH FIRESTOPPING MATERIAL (SEE SPEC.)
9. ALL H.M. DOORS & H.M. FRAMES TO BE PAINTED.
10. ALL EXT. STEEL TO BE GALVANIZED AND PTD. (U.N.O.).
11. SUBCONTRACTOR TO COORD. WOOD BLOCKING FOR WALL-MOUNTED ITEMS SUCH AS, TOILET ACCESSORIES, HANDRAILS, ETC.
12. FOR LARGE OPENINGS IN FLOORS AND WALLS SEE STRUCT. DWGS. FOR CONCRETE & STRUCT INFILLS. FOR SMALL OPENINGS IN FLOOR SLABS, EITHER FILL WITH FIRESTOPPING MATERIALS (SEE SPEC.) OR CONCRETE.

REV.	DATE	DESCRIPTION

REVISIONS

HOLABIRD & ROOT
140 South Dearborn Chicago, IL 60603
Tel: 312 357 1771 Fax: 312 357 1909
www.holabird.com

	FERMI LAB	DATE
DESIGNED	M.BLEWITT	03/30/2015
DRAWN	M.BLEWITT	03/30/2015
CHECKED	G.GRUNLOH	03/30/2015
APPROVED		
SUBMITTED		

S W E PROJECT NORTH

SCALE:
1/8"=1'-0"
8 0 8 16
SCALE FEET

FERMI NATIONAL ACCELERATOR LABORATORY
UNITED STATES DEPARTMENT OF ENERGY

SBN FAR DETECTOR BUILDING
ENCLOSURE LEVEL PLAN

DRAWING NO. **6-7-93** **A-1** REV.

30 MAR. 2015

C:\Users\Matt_B\Desktop\Revit Locals\15592_SBN_Far_Detector_blewittm.rvt
3/30/2015 8:36:41 PM

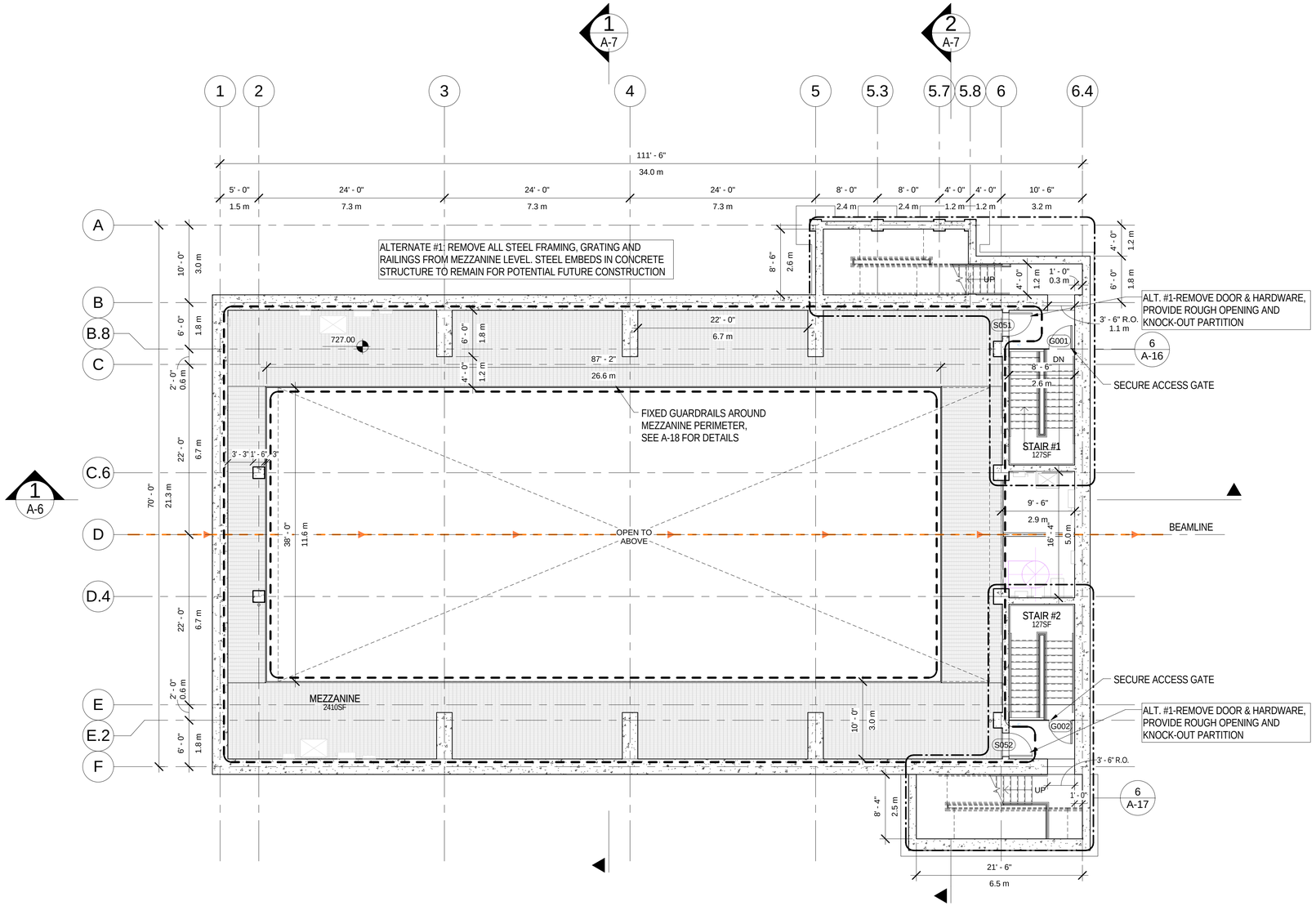

MEZZANINE LEVEL PLAN

SCALE: 1/8" = 1'-0"

GENERAL NOTES: FLOOR PLANS

1. SEE LS-SERIES DWGS FOR FIRE-RATED PARTITION LOCATIONS.
2. SEE SHEET A-20 FOR DOOR SCHEDULE.
3. SEE SHEET A-21 FOR PARTITION TYPES.
4. SUBCONTRACTOR SHALL VERIFY ALL FIELD CONDITIONS FOR COORD. OF ALL TRADES AND REPORT ANY CONFLICTS OR DISCREPANCIES TO FERMILAB.
5. ALL DIMENSIONS ARE LOCATED AT FACE OF FINISH, U.N.O.
6. PROVIDE 18" MIN, WHERE POSSIBLE, ON LATCH SIDE OF ALL DOORS. ALL DOOR FRAMES TO BE 4" FROM THE CLOSEST PERPENDICULAR PARTITION, U.N.O.
7. PROVIDE MOP SINK WITH WALL GUARD, MOP HOLDER AND UTILITY SHELF AT ALL JANITOR CLOSETS.
8. FILL ALL SLAB PENETRATIONS WITH FIRESTOPPING MATERIAL (SEE SPEC.)
9. ALL H.M. DOORS & H.M. FRAMES TO BE PAINTED.
10. ALL EXT. STEEL TO BE GALVANIZED AND PTD. (U.N.O.).
11. SUBCONTRACTOR TO COORD. WOOD BLOCKING FOR WALL-MOUNTED ITEMS SUCH AS, TOILET ACCESSORIES, HANDRAILS, ETC.
12. FOR LARGE OPENINGS IN FLOORS AND WALLS SEE STRUCT. DWGS. FOR CONCRETE & STRUCT INFILLS. FOR SMALL OPENINGS IN FLOOR SLABS, EITHER FILL WITH FIRESTOPPING MATERIALS (SEE SPEC.) OR CONCRETE.

REV.	DATE	DESCRIPTION

REVISIONS

HOLABIRD & ROOT

140 South Dearborn Chicago, IL 60603
Tel: 312 357 1771 Fax: 312 357 1909

www.holabird.com

	FERMI LAB	DATE
DESIGNED	M.BLEWITT	03/30/2015
DRAWN	M.BLEWITT	03/30/2015
CHECKED	G.GRUNLOH	03/30/2015
APPROVED		
SUBMITTED		

S W E PROJECT NORTH

SCALE:
1/8"=1'-0"
8 0 8 16
SCALE FEET

FERMI NATIONAL ACCELERATOR LABORATORY

UNITED STATES DEPARTMENT OF ENERGY

SBN FAR DETECTOR BUILDING

MEZZANINE LEVEL PLAN

DRAWING NO. **6-7-93** **A-2** REV.

30 MAR. 2015

C:\Users\Matt_B\Desktop\Revit Locals\155592_SBN_Far_Detector_blewittm.rvt

3/30/2015 8:36:43 PM

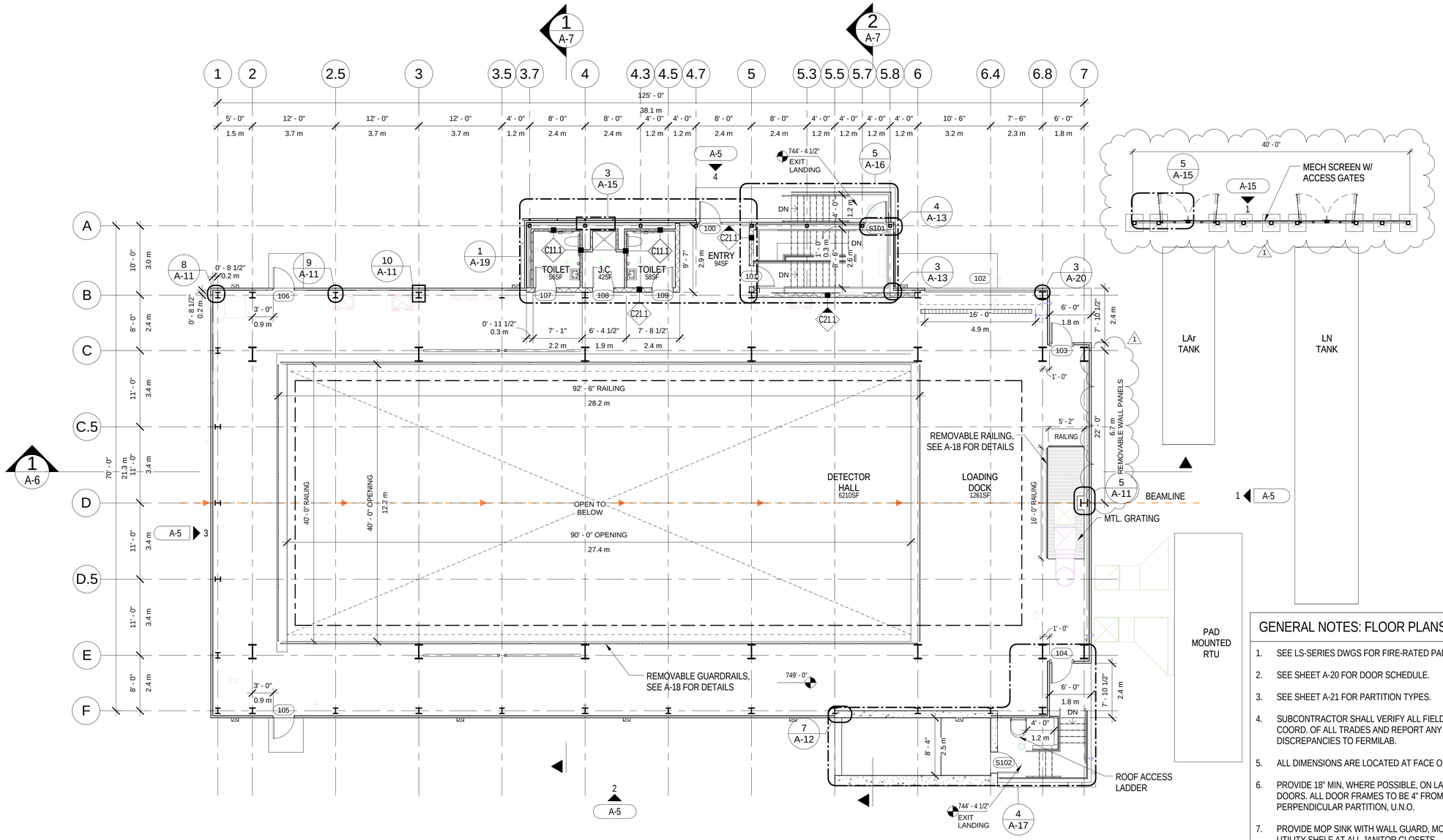

GRADE LEVEL PLAN

SCALE: 1/8" = 1'-0"

GENERAL NOTES: FLOOR PLANS

1. SEE LS-SERIES DWGS FOR FIRE-RATED PARTITION LOCATIONS.
2. SEE SHEET A-20 FOR DOOR SCHEDULE.
3. SEE SHEET A-21 FOR PARTITION TYPES.
4. SUBCONTRACTOR SHALL VERIFY ALL FIELD CONDITIONS FOR COORD. OF ALL TRADES AND REPORT ANY CONFLICTS OR DISCREPANCIES TO FERMILAB.
5. ALL DIMENSIONS ARE LOCATED AT FACE OF FINISH, U.N.O.
6. PROVIDE 18" MIN, WHERE POSSIBLE, ON LATCH SIDE OF ALL DOORS. ALL DOOR FRAMES TO BE 4" FROM THE CLOSEST PERPENDICULAR PARTITION, U.N.O.
7. PROVIDE MOP SINK WITH WALL GUARD, MOP HOLDER AND UTILITY SHELF AT ALL JANITOR CLOSETS.
8. FILL ALL SLAB PENETRATIONS WITH FIRESTOPPING MATERIAL (SEE SPEC.)
9. ALL H.M. DOORS & H.M. FRAMES TO BE PAINTED.
10. ALL EXT. STEEL TO BE GALVANIZED AND PTD. (U.N.O.).
11. SUBCONTRACTOR TO COORD. WOOD BLOCKING FOR WALL-MOUNTED ITEMS SUCH AS, TOILET ACCESSORIES, HANDRAILS, ETC.
12. FOR LARGE OPENINGS IN FLOORS AND WALLS SEE STRUCT. DWGS. FOR CONCRETE & STRUCT INFILLS. FOR SMALL OPENINGS IN FLOOR SLABS, EITHER FILL WITH FIRESTOPPING MATERIALS (SEE SPEC.) OR CONCRETE.

REV.	DATE	DESCRIPTION
1	04/22/15	AMENDMENT #1

REVISIONS

HOLABIRD & ROOT

140 South Dearborn Chicago, IL 60603
Tel: 312 357 1771 Fax: 312 357 1909

www.holabird.com

	FERMI LAB	DATE
DESIGNED	M.BLEWITT	03/30/2015
DRAWN	M.BLEWITT	03/30/2015
CHECKED	G.GRUNLOH	03/30/2015
APPROVED		
SUBMITTED		

PROJECT NORTH

SCALE: 1/8"=1'-0"

FERMI NATIONAL ACCELERATOR LABORATORY

UNITED STATES DEPARTMENT OF ENERGY

SBN FAR DETECTOR BUILDING

MAIN LEVEL PLAN

DRAWING NO. 6-7-93 A-3 REV. 1

30 MAR. 2015

C:\Users\Matt_B\Desktop\Revit Locals\15592_SBN_Far_Detector_blewittm.rvt

4/22/2015 2:45:38 PM

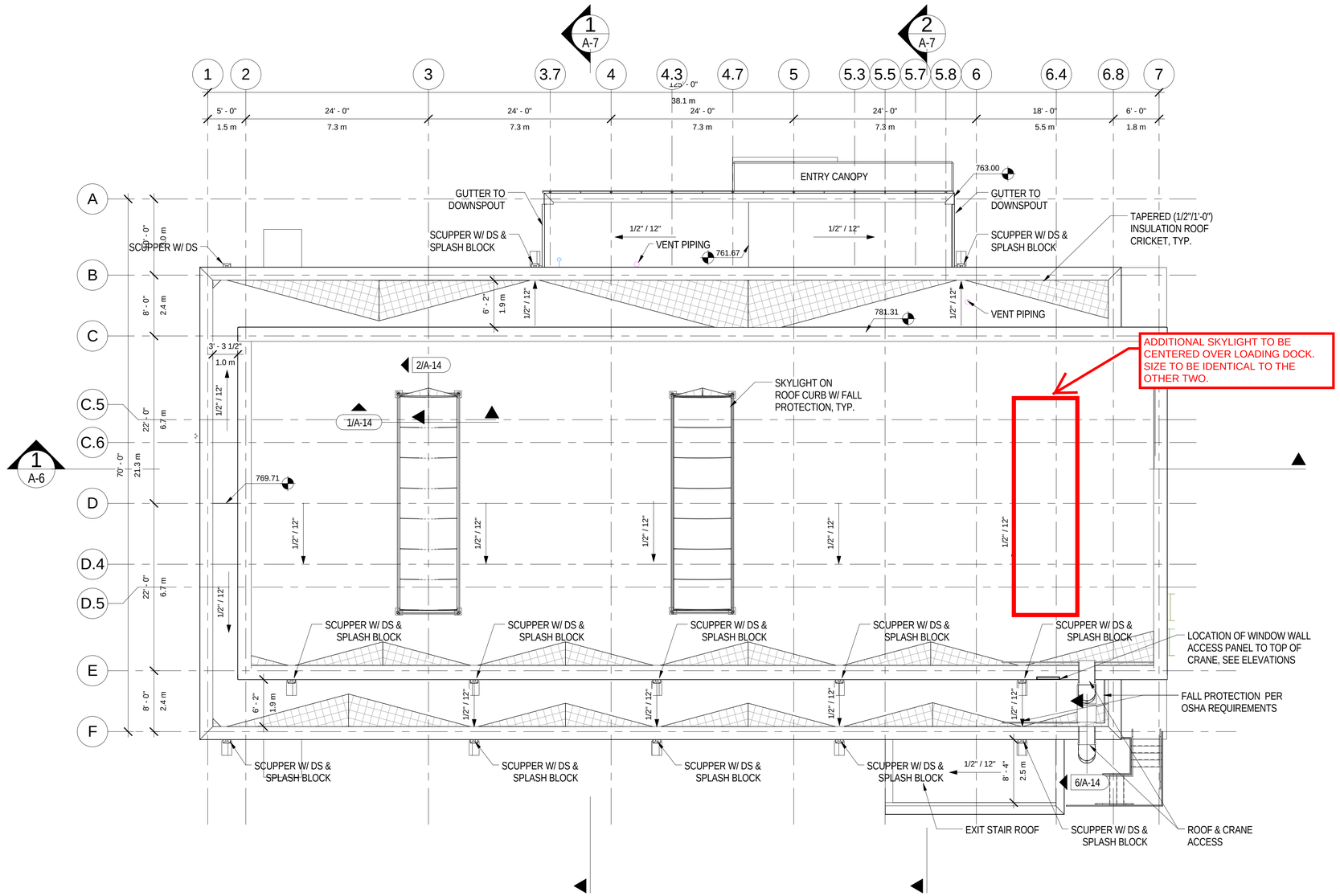

ROOF PLAN

SCALE: 1/8" = 1'-0"

GENERAL NOTES: ROOF PLAN

1. COORDINATE ALL OPENINGS AND PENETRATIONS WITH RELATED MECH. & STRUCT. DOCUMENTS. ROOFING AT OPENINGS & PENETRATIONS TO BE INSTALLED PER MANUFACTURER'S RECOMMENTATIONS.
2. VERIFY TOP OF INSUL. & PARAPET IN FIELD.
3. PROVIDE OSHA APPROVED FALL PROTECTION AT REQUIRED LOCATIONS ALONG ROOF EDGE AND SKYLIGHTS ONLY.

C:\Users\Matt_B\Desktop\Revit Locals\15592_SBN_Far_Detector_blewittm.rvt

3/30/2015 8:36:49 PM

REV.	DATE	DESCRIPTION

REVISIONS

HOLABIRD & ROOT
140 South Dearborn Chicago, IL 60603
Tel: 312 357 1771 Fax: 312 357 1909
www.holabird.com

	FERMI LAB	DATE
DESIGNED	M.BLEWITT	03/30/2015
DRAWN	M.BLEWITT	03/30/2015
CHECKED	G.GRUNLOH	03/30/2015
APPROVED		
SUBMITTED		

S W E PROJECT NORTH

SCALE:
1/8"=1'-0"
8 0 8 16
SCALE FEET

FERMI NATIONAL ACCELERATOR LABORATORY
UNITED STATES DEPARTMENT OF ENERGY

SBN FAR DETECTOR BUILDING
ROOF PLAN

DRAWING NO. **6-7-93** **A-4** REV.

30 MAR. 2015

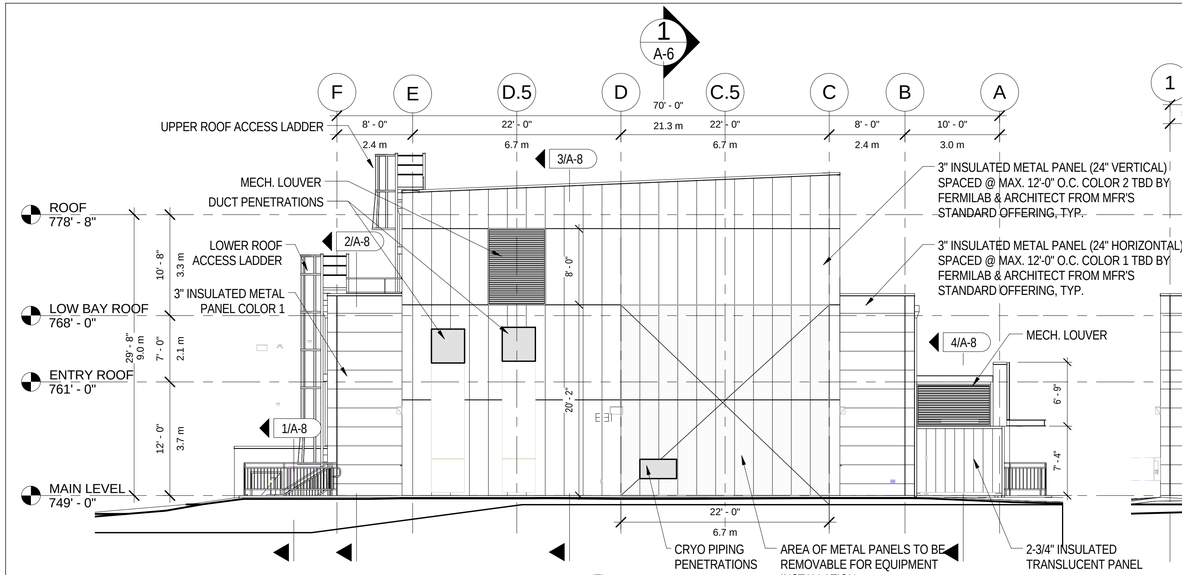

NORTH ELEVATION 1

SCALE: 1/8" = 1'-0"

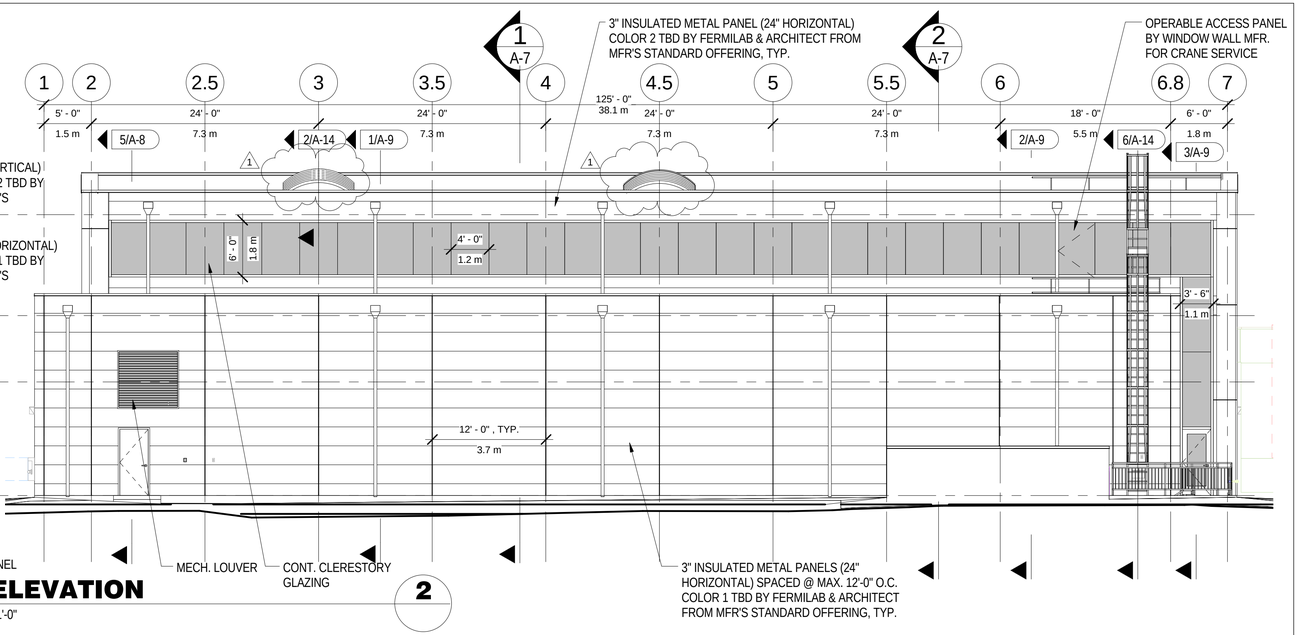

EAST ELEVATION 2

SCALE: 1/8" = 1'-0"

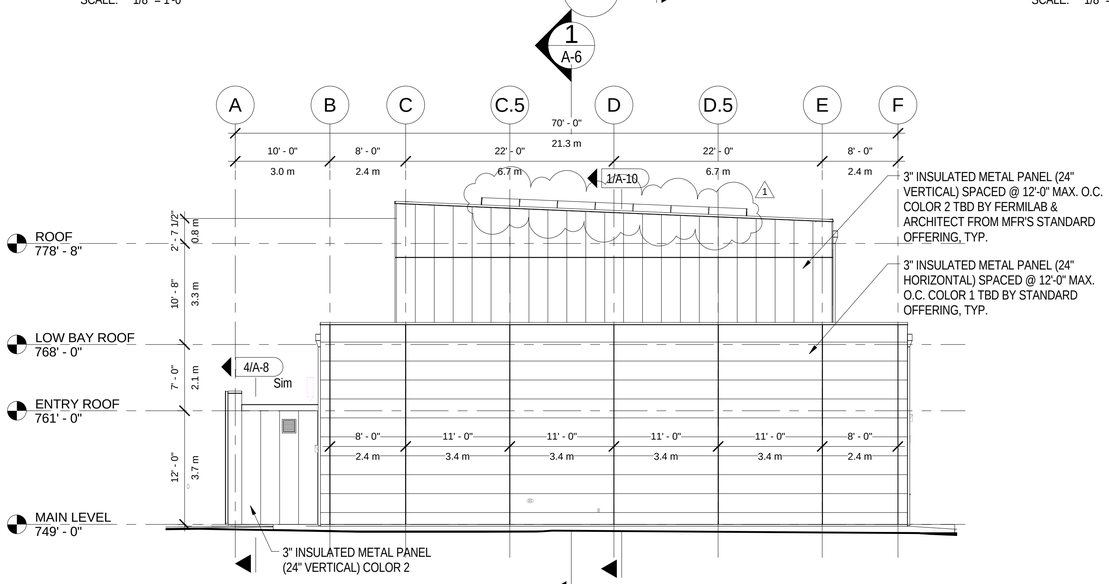

SOUTH ELEVATION 3

SCALE: 1/8" = 1'-0"

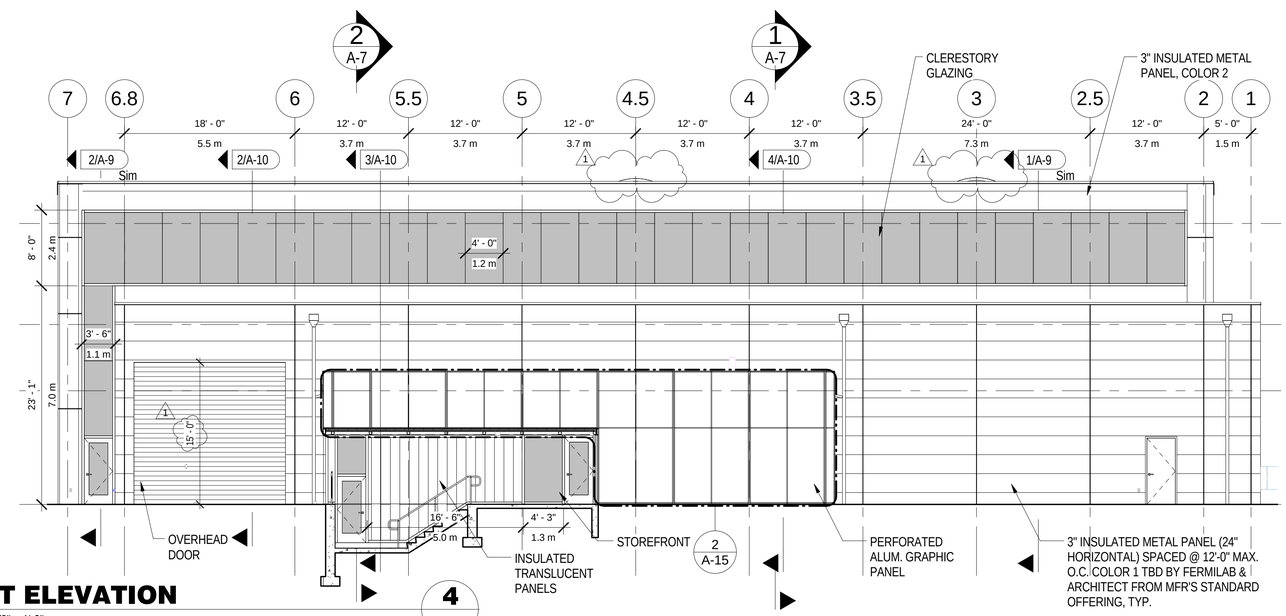

WEST ELEVATION 4

SCALE: 1/8" = 1'-0"

C:\Users\Matt_B\Desktop\Revit Locals\15592_SBN_Far_Detector_blewittm.rvt

4/22/2015 2:45:53 PM

REV.	DATE	DESCRIPTION
1	04/22/15	AMENDMENT #1

REVISIONS

HOLABIRD & ROOT

140 South Dearborn Chicago, IL 60603
Tel: 312 357 1771 Fax: 312 357 1909

www.holabird.com

	FERMI LAB	DATE
DESIGNED	M.BLEWITT	03/30/2015
DRAWN	M.BLEWITT	03/30/2015
CHECKED	G.GRUNLOH	03/30/2015
APPROVED		
SUBMITTED		

SCALE:

1/8"=1'-0"

8 0 8 16
SCALE FEET

FERMI NATIONAL ACCELERATOR LABORATORY

UNITED STATES DEPARTMENT OF ENERGY

SBN FAR DETECTOR BUILDING

BUILDING ELEVATIONS

DRAWING NO. 6-7-93 A-5 REV. 1

30 MAR. 2015

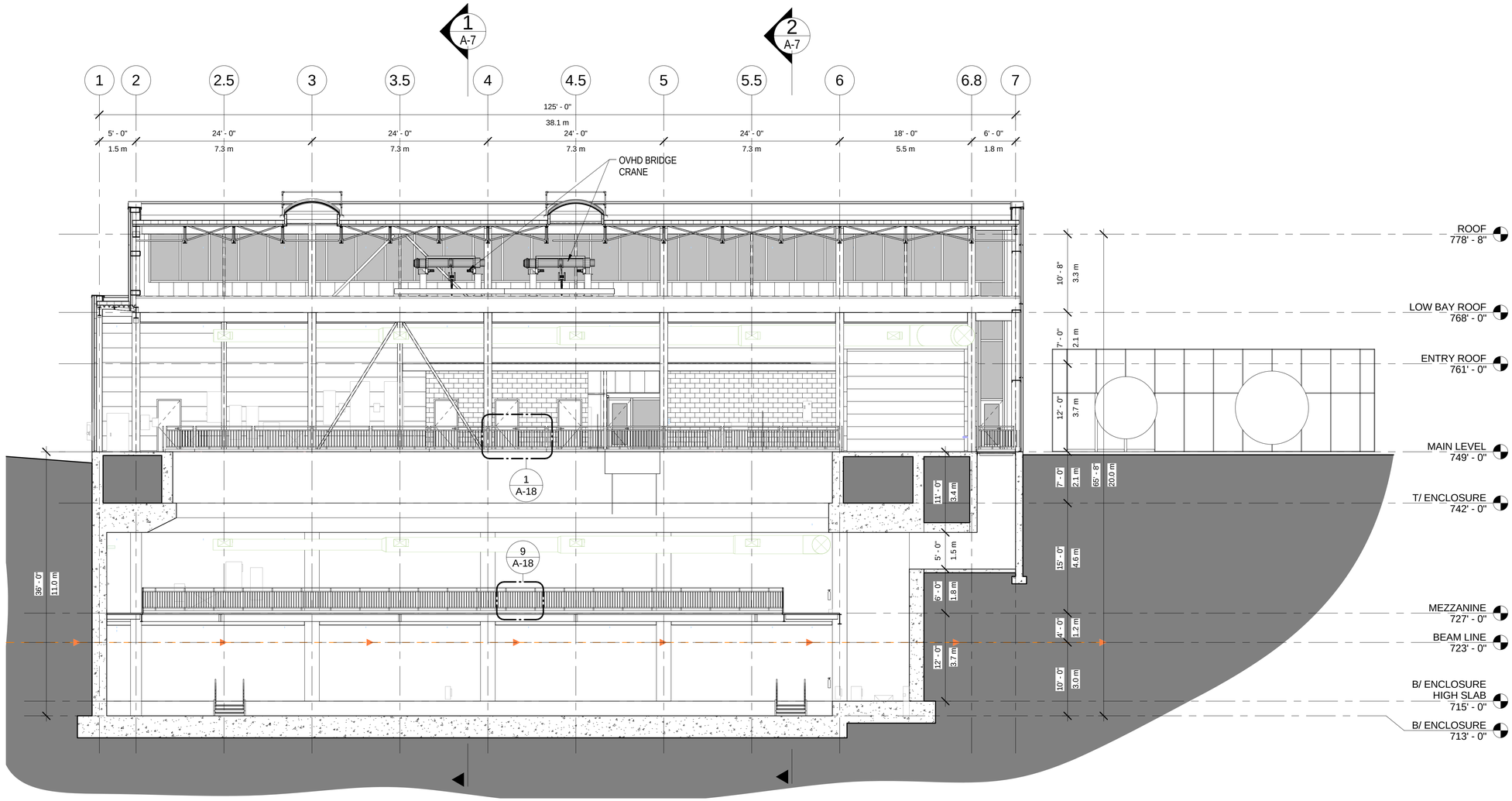

LONGITUDINAL SECTION

1

SCALE: 1/8" = 1'-0"

C:\Users\Matt_B\Desktop\Revit Locals\15592_SBN_Far_Detector_blewittm.rvt

3/30/2015 8:37:07 PM

REV.	DATE	DESCRIPTION

REVISIONS

HOLABIRD & ROOT

140 South Dearborn Chicago, IL 60603
Tel: 312 357 1771 Fax: 312 357 1909

www.holabird.com

	FERMI LAB	DATE
DESIGNED	M.BLEWITT	03/30/2015
DRAWN	M.BLEWITT	03/30/2015
CHECKED	G.GRUNLOH	03/30/2015
APPROVED		
SUBMITTED		

SCALE:

1/8" = 1'-0"

8 0 8 16
SCALE FEET

FERMI NATIONAL ACCELERATOR LABORATORY

UNITED STATES DEPARTMENT OF ENERGY

SBN FAR DETECTOR BUILDING

LONGITUDINAL SECTION

DRAWING NO. 6-7-93 A-6 REV.

30 MAR. 2015

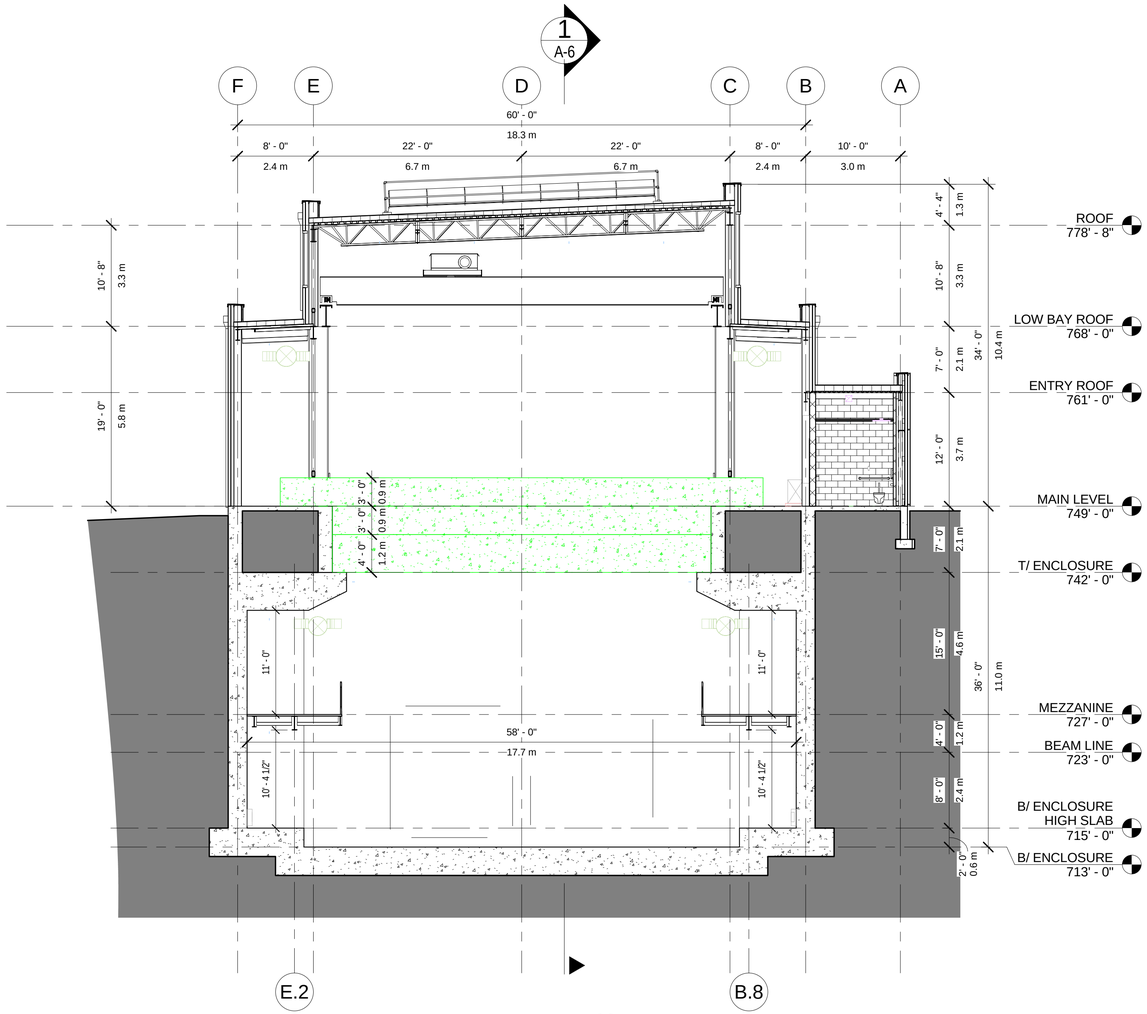

TRANSVERSE SECTION 1

SCALE: 1/8" = 1'-0"

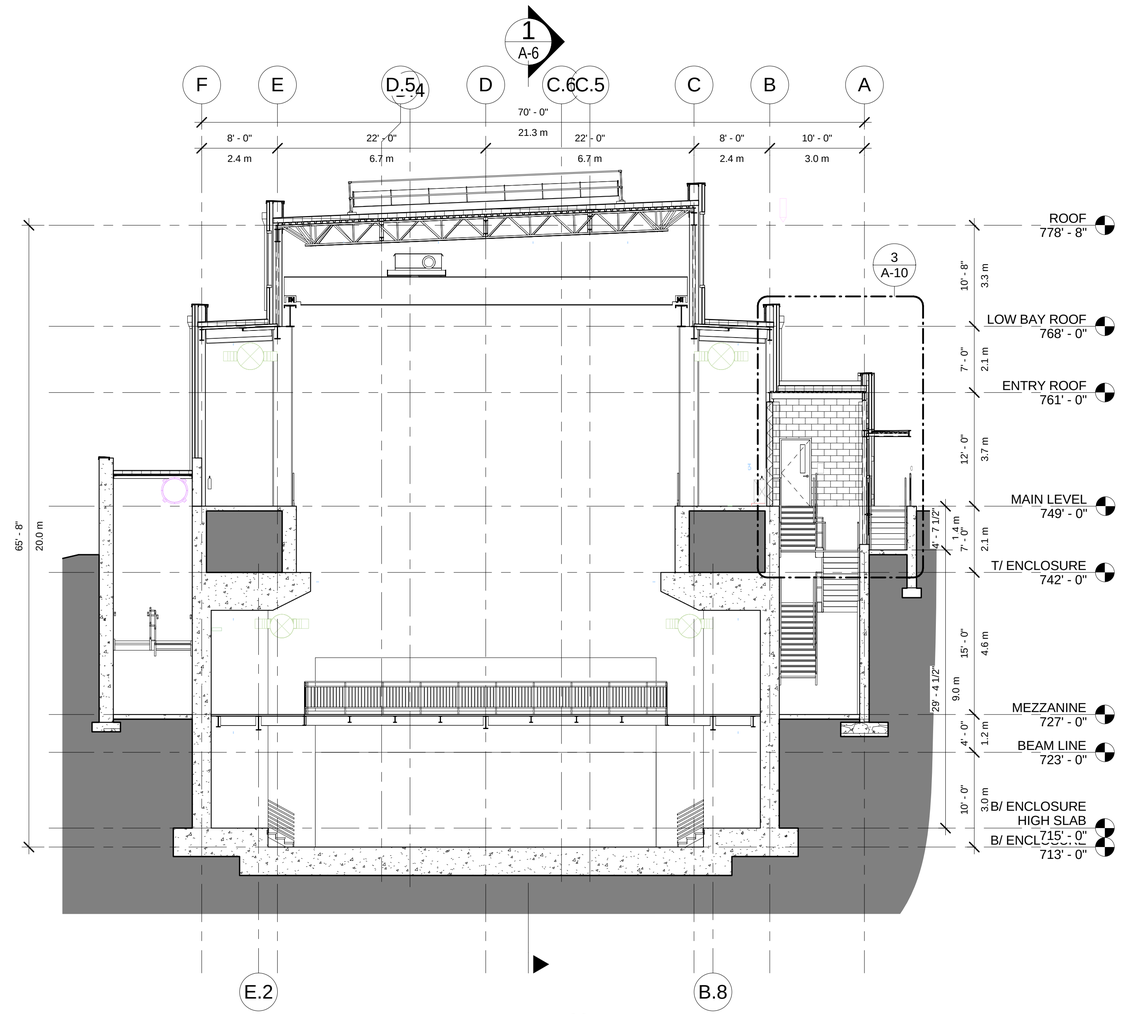

TRANS. SECTION AT EXIT 2

SCALE: 1/8" = 1'-0"

C:\Users\Matt_B\Desktop\Revit Locals\15592_SBN_Far_Detector_blewittm.rvt

3/30/2015 8:37:14 PM

REV.	DATE	DESCRIPTION

REVISIONS

HOLABIRD & ROOT

140 South Dearborn Chicago, IL 60603
Tel: 312 357 1771 Fax: 312 357 1909

www.holabird.com

	FERMI LAB	DATE
DESIGNED	M.BLEWITT	03/30/2015
DRAWN	M.BLEWITT	03/30/2015
CHECKED	G.GRUNLOH	03/30/2015
APPROVED		
SUBMITTED		

SCALE:

1/8"=1'-0" 8 0 8 16 SCALE FEET

FERMI NATIONAL ACCELERATOR LABORATORY

UNITED STATES DEPARTMENT OF ENERGY

SBN FAR DETECTOR BUILDING

TRANSVERSE SECTIONS

DRAWING NO. **6-7-93** **A-7** REV.

30 MAR. 2015

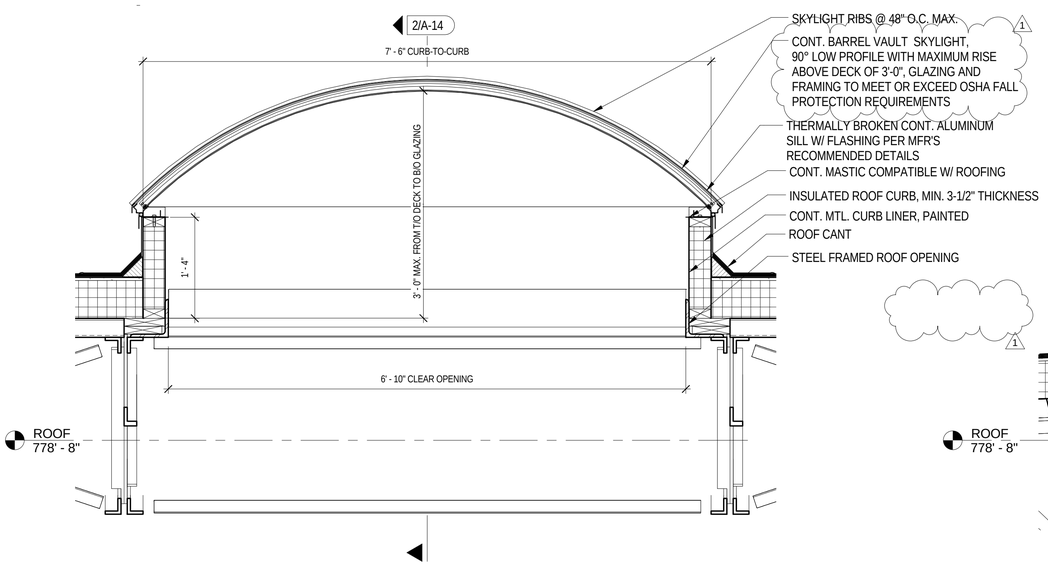

SECTION DETAIL - REMOVABLE SKYLIGHT 1

SCALE: 1" = 1'-0" [REF: 1/ A-4]

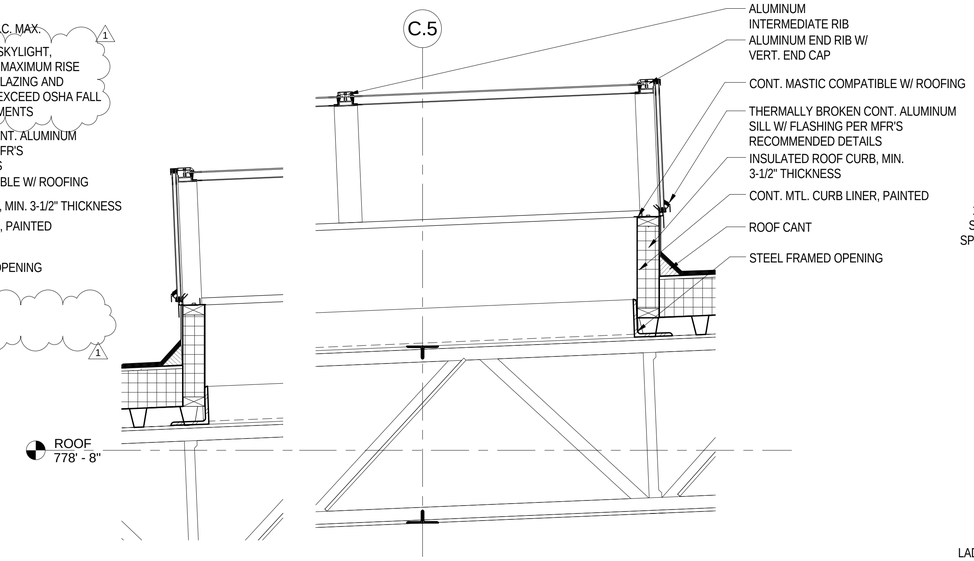

SECTION DETAIL - REMOVABLE SKYLIGHT 2

SCALE: 1" = 1'-0" [REF: 1/ A-4]

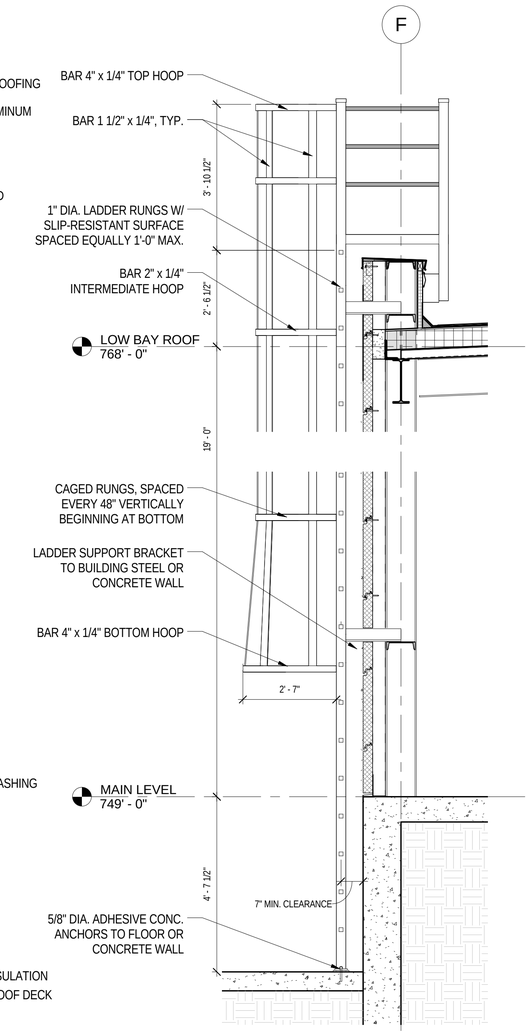

ACCESS LADDER DETAIL 6

SCALE: 1/2" = 1'-0" [REF: 1/ A-4]

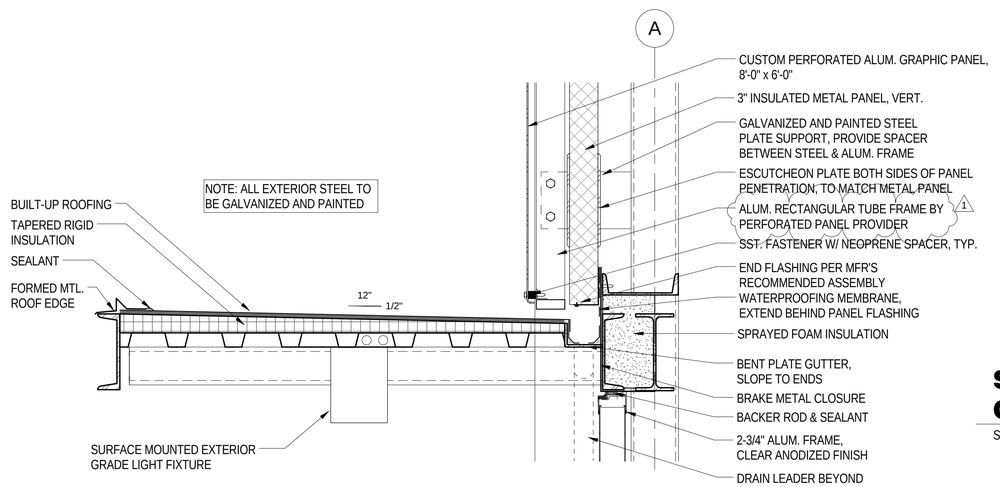

SECTION DETAIL - CANOPY SUPPORT 4

SCALE: 1 1/2" = 1'-0" [REF: 3/ A-10]

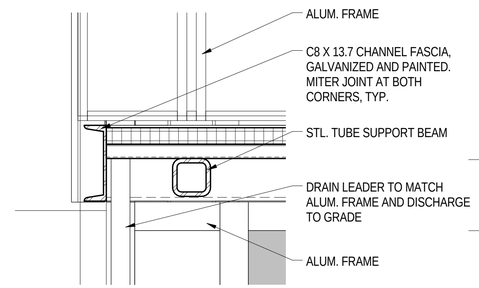

SECTION DETAIL - CANOPY FASCIA 5

SCALE: 1 1/2" = 1'-0" [REF: 2/ A-15]

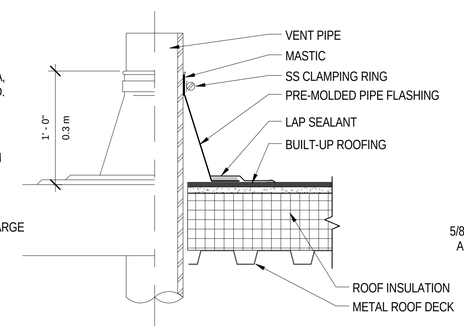

TYP. DETAIL AT VENT PIPE PENETRATION 3

SCALE: 1 1/2" = 1'-0"

REV.	DATE	DESCRIPTION
1	04/22/15	AMENDMENT #1

REVISIONS

HOLABIRD & ROOT

140 South Dearborn Chicago, IL 60603
Tel: 312 357 1771 Fax: 312 357 1909

www.holabird.com

FERMI LAB		DATE
DESIGNED	M.BLEWITT	03/30/2015
DRAWN	M.BLEWITT	03/30/2015
CHECKED	G.GRUNLOH	03/30/2015
APPROVED		
SUBMITTED		

SCALE:

1"=1'-0" 1 0 1 2 SCALE FEET

1 1/2"=1'-0" 1 0 1 SCALE FEET

FERMI NATIONAL ACCELERATOR LABORATORY

UNITED STATES DEPARTMENT OF ENERGY

SBN FAR DETECTOR BUILDING

ROOF & CANOPY DETAILS

DRAWING NO. 6-7-93 A-14 REV. 1

30 MAR. 2015

C:\Users\Matt_Bl\Desktop\Revit Locals\15592_SBN_Far_Detector_blewittm.rvt

4/22/2015 2:46:47 PM